Chapter 1: Setting Up Your Development Environment

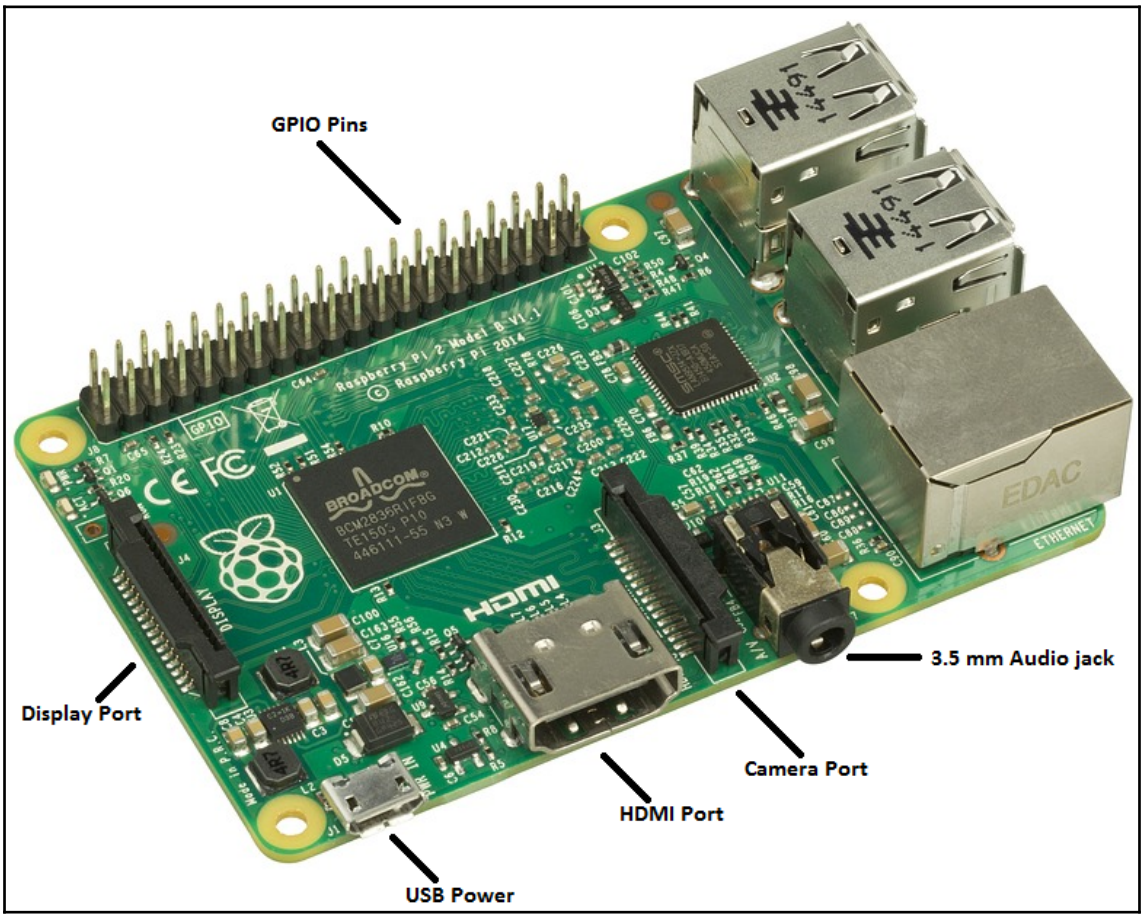

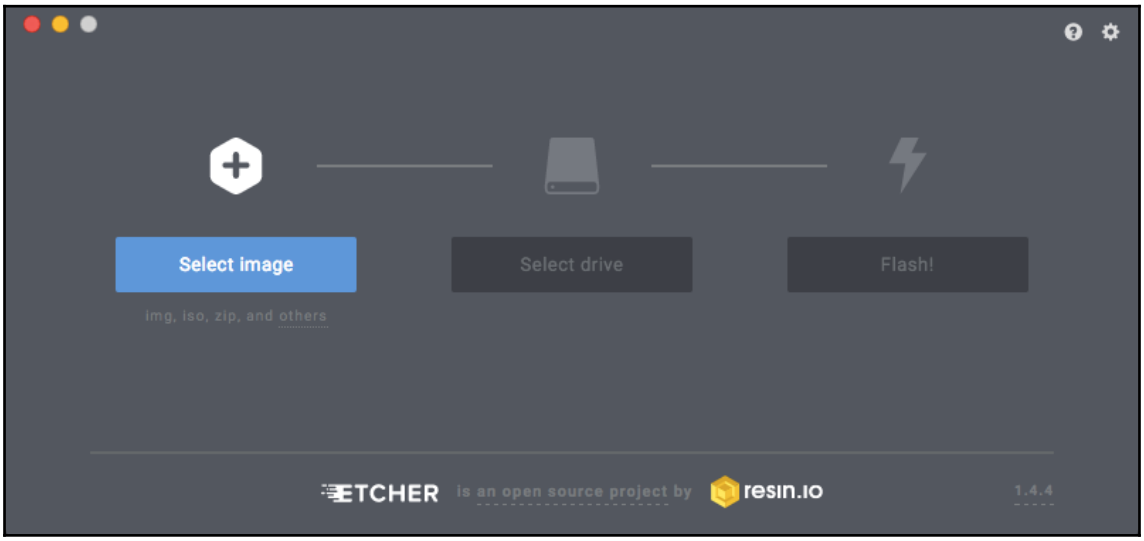


```
/Volumes/boot
➜ ls
COPYING.linux            bcm2709-rpi-2-b.dtb      fixup.dat          overlays
LICENCE.broadcom         bcm2710-rpi-3-b-plus.dtb fixup_cd.dat       ssh
LICENSE.oracle           bcm2710-rpi-3-b.dtb      fixup_db.dat       start.elf
bcm2708-rpi-0-w.dtb      bcm2710-rpi-cm3.dtb      fixup_x.dat        start_cd.elf
bcm2708-rpi-b-plus.dtb   bootcode.bin             issue.txt          start_db.elf
bcm2708-rpi-b.dtb        cmdline.txt              kernel.img         start_x.elf
bcm2708-rpi-cm.dtb       config.txt               kernel7.img        wpa_supplicant.conf
```

```
Code/bots/book
➜ ssh pi@raspberrypi.local
The authenticity of host 'raspberrypi.local (2600:1700:211:3920:6b7a:ca9e:9c9e:1cee)' can't be established.
ECDSA key fingerprint is SHA256:/SVFAnCYjqbNacZwuALCgTUYf+oZXsGEpSj5oHRNiZQ.
Are you sure you want to continue connecting (yes/no)? yes
Warning: Permanently added 'raspberrypi.local,2600:1700:211:3920:6b7a:ca9e:9c9e:1cee' (ECDSA) to the list of k
nown hosts.
pi@raspberrypi.local's password:
```

```
pi@raspberrypi.local's password:
Linux raspberrypi 4.14.34-v7+ #1110 SMP Mon Apr 16 15:18:51 BST 2018 armv7l

The programs included with the Debian GNU/Linux system are free software;
the exact distribution terms for each program are described in the
individual files in /usr/share/doc/*/copyright.

Debian GNU/Linux comes with ABSOLUTELY NO WARRANTY, to the extent
permitted by applicable law.

SSH is enabled and the default password for the 'pi' user has not been changed.
This is a security risk - please login as the 'pi' user and type 'passwd' to set a new password.

pi@raspberrypi:~ $ _
```

```
pi@raspberrypi:~ $ ifconfig
eth0: flags=4099<UP,BROADCAST,MULTICAST>  mtu 1500
        ether b8:27:eb:5a:56:f8  txqueuelen 1000  (Ethernet)
        RX packets 0  bytes 0 (0.0 B)
        RX errors 0  dropped 0  overruns 0  frame 0
        TX packets 0  bytes 0 (0.0 B)
        TX errors 0  dropped 0 overruns 0  carrier 0  collisions 0

lo: flags=73<UP,LOOPBACK,RUNNING>  mtu 65536
        inet 127.0.0.1  netmask 255.0.0.0
        inet6 ::1  prefixlen 128  scopeid 0x10<host>
        loop  txqueuelen 1000  (Local Loopback)
        RX packets 0  bytes 0 (0.0 B)
        RX errors 0  dropped 0  overruns 0  frame 0
        TX packets 0  bytes 0 (0.0 B)
        TX errors 0  dropped 0 overruns 0  carrier 0  collisions 0

wlan0: flags=4163<UP,BROADCAST,RUNNING,MULTICAST>  mtu 1500
        inet 192.168.1.106  netmask 255.255.255.0  broadcast 192.168.1.255
```

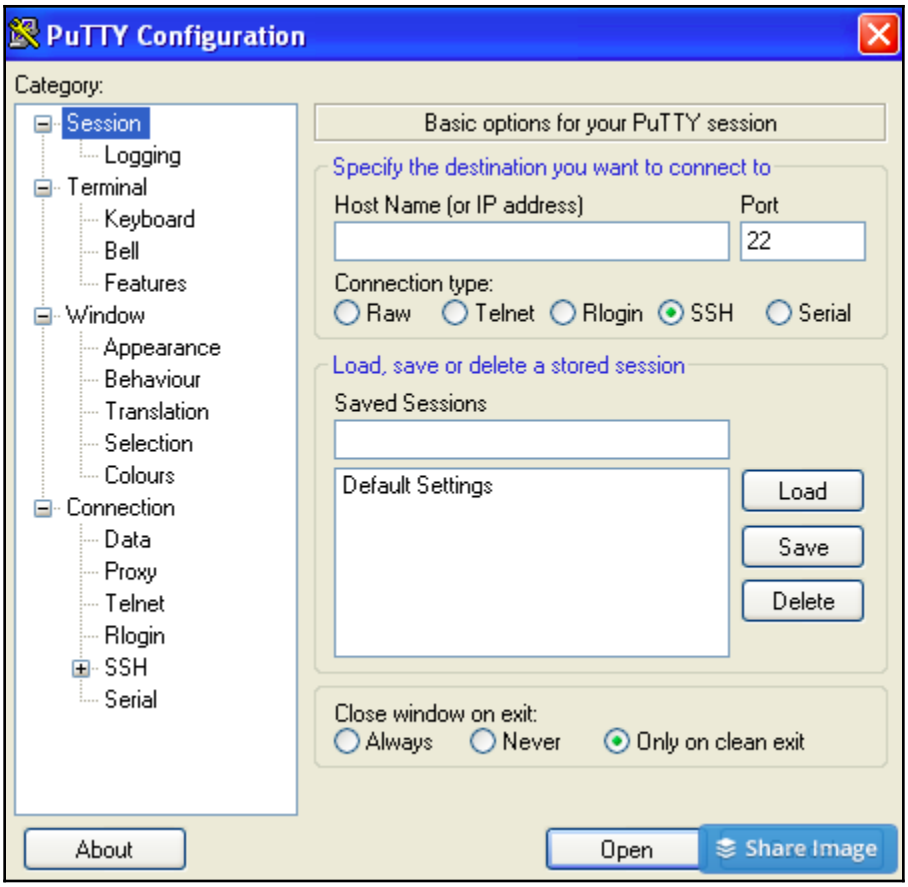
PuTTY Configuration
Category:
Session
Logging
Terminal
Keyboard
Bell
Features
Window
Appearance
Behaviour
Translation
Selection
Colours
Connection
Data
Proxy
Telnet
Rlogin
SSH
Serial
Basic options for your PuTTY session
Specify the destination you want to connect to
Host Name (or IP address)
Port
22
Connection type:
Raw
Telnet
Rlogin
SSH
Serial
Load, save or delete a stored session
Saved Sessions
Default Settings
Load
Save
Delete
Close window on exit:
Always
Never
Only on clean exit
About
Open
Share Image

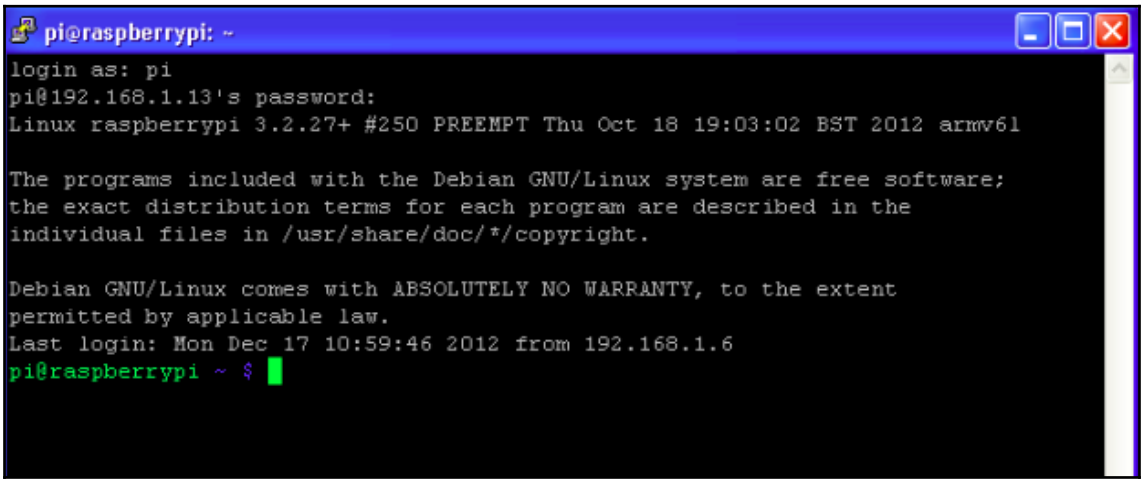
pi@raspberrypi: ~
login as: pi
pi@192.168.1.13's password:
Linux raspberrypi 3.2.27+ #250 PREEMPT Thu Oct 18 19:03:02 BST 2012 armv61
The programs included with the Debian GNU/Linux system are free software;
the exact distribution terms for each program are described in the
individual files in /usr/share/doc/*/copyright.
Debian GNU/Linux comes with ABSOLUTELY NO WARRANTY, to the extent
permitted by applicable law.
Last login: Mon Dec 17 10:59:46 2012 from 192.168.1.6
pi@raspberrypi ~ $

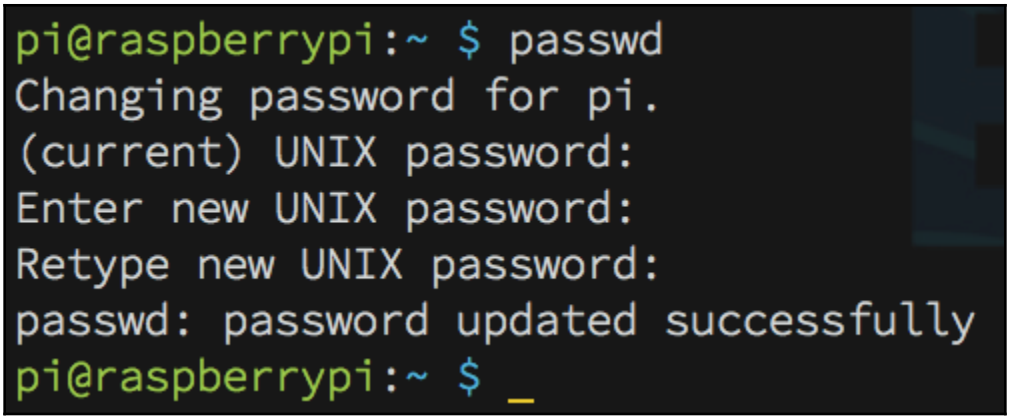
pi@raspberrypi:~ $ passwd
Changing password for pi.
(current) UNIX password:
Enter new UNIX password:
Retype new UNIX password:
passwd: password updated successfully
pi@raspberrypi:~ $ _

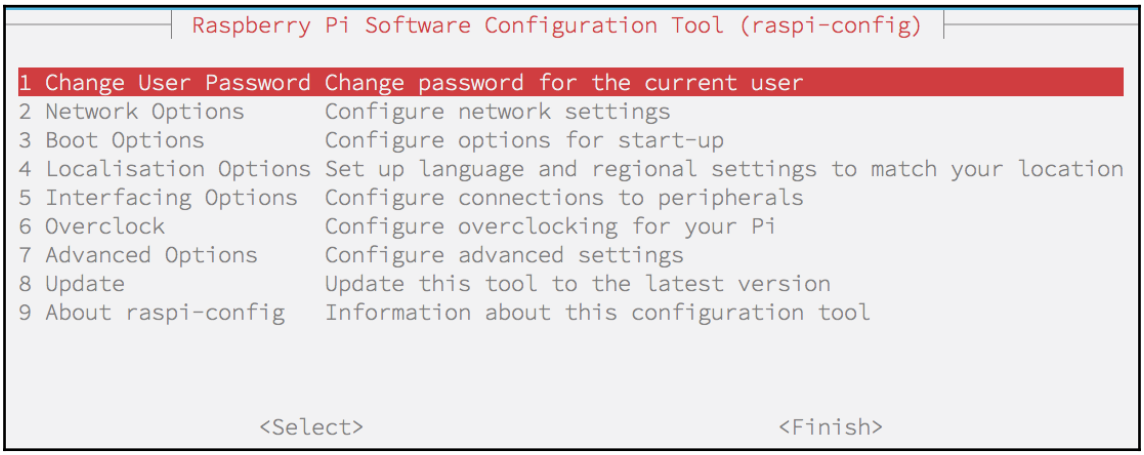
Raspberry Pi Software Configuration Tool (raspi-config)
1 Change User Password Change password for the current user
2 Network Options Configure network settings
3 Boot Options Configure options for start-up
4 Localisation Options Set up language and regional settings to match your location
5 Interfacing Options Configure connections to peripherals
6 Overclock Configure overclocking for your Pi
7 Advanced Options Configure advanced settings
8 Update Update this tool to the latest version
9 About raspi-config Information about this configuration tool
<Select>
<Finish>

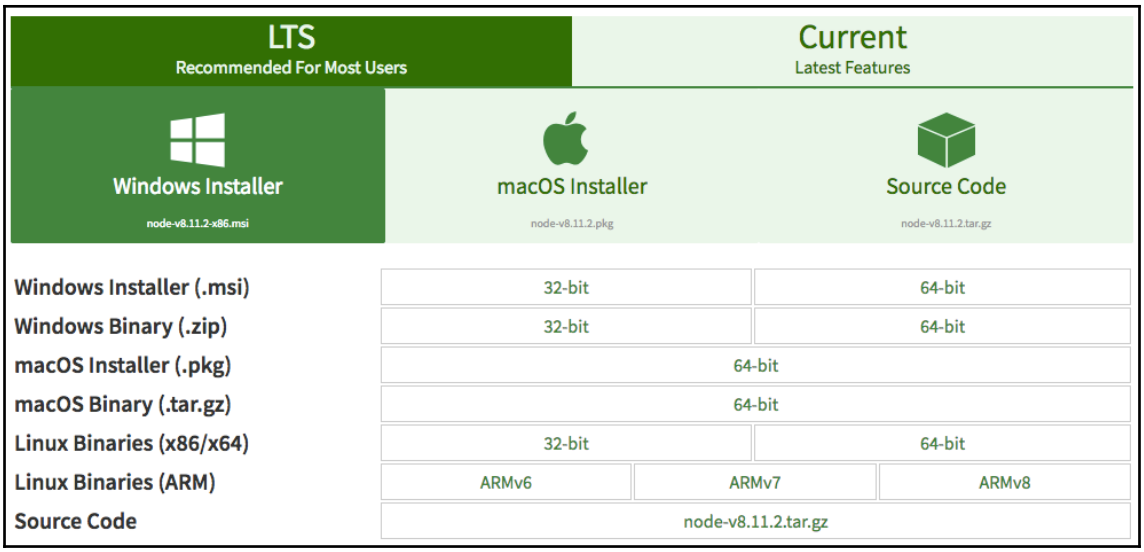


```
pi@raspberrypi:~/node-v8.11.2-linux-armv7l $ sudo mv ./lib/* /usr/local/lib
pi@raspberrypi:~/node-v8.11.2-linux-armv7l $ sudo mv ./share/* /usr/local/share
pi@raspberrypi:~/node-v8.11.2-linux-armv7l $ node -v
v8.11.2
pi@raspberrypi:~/node-v8.11.2-linux-armv7l $ npm -v
5.6.0
```

Chapter 2: Creating Your First Johnny-Five Project

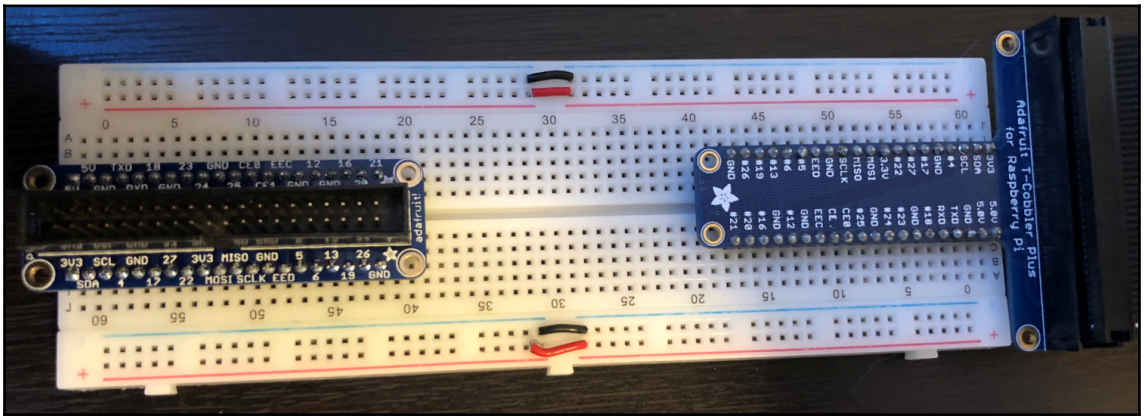

README.md

Raspi-io

gitter join chat

Raspi-io is a Firmata API compatible library for Raspbian running on the Raspberry Pi that can be used as an I/O plugin with Johnny-Five. The API docs for this module can be found on the Johnny-Five Wiki, except for the constructor which is documented below. Raspi IO supports all models of the Raspberry Pi, except for the Model A.

If you have a bug report, feature request, or wish to contribute code, please be sure to check out the Contributing Guide.

System Requirements

- Raspberry Pi Model B Rev 1 or newer (sorry Model A users)
- Raspbian Jessie or newer

3.3V	1	2	5V
I2C0 SDA	3	4	DNC
I2C0 SCL	5	6	GROUND
GPIO4	7	8	UART TXD
DNC	9	10	UART RXD
GPIO 17	11	12	GPIO 18
GPIO 21	13	14	DNC
GPIO 22	15	16	GPIO 23
DNC	17	18	GPIO 24
SP10 MOSI	19	20	DNC
SP10 MISO	21	22	GPIO 25
SP10 SCLK	23	24	SP10 CEO N
DNC	25	26	SP10 CE1 N

Model A+/B+/Raspberry Pi 2/Raspberry Pi 3/Raspberry Pi Zero

P1 Header

Physical Pin	Wiring Pi Pin	Peripherals		Peripherals	Wiring Pi Pin	Physical Pin
P1-1		3.3V	|	5V		P1-2
P1-3		SDA0	|	5V		P1-4
P1-5		SCL0	|	GND		P1-6
P1-7	7	GPIO4	|	GPIO14/TXD0	15	P1-8
P1-9		GND	|	GPIO15/RXD0	16	P1-10
P1-11	0	GPIO17	|	GPIO18/PWM0	1	P1-12
P1-13	2	GPIO27	|	GND		P1-14
P1-15	3	GPIO22	|	GPIO23	4	P1-16
P1-17		3.3V	|	GPIO24	5	P1-18
P1-19	12	GPIO10/MOSI0	|	GND		P1-20
P1-21	13	GPIO9/MISO0	|	GPIO25	6	P1-22
P1-23	14	GPIO11/SCLK0	|	GPIO8/CE0	10	P1-24
P1-25		GND	|	GPIO7/CE1	11	P1-26
P1-27		Do Not Connect	|	Do Not Connect		P1-28
P1-29	21	GPIO5	|	GND		P1-30
P1-31	22	GPIO6	|	GPIO12/PWM0	26	P1-32
P1-33	23	GPIO13/PWM1	|	GND		P1-34
P1-35	24	GPIO19/MISO1/PWM1	|	GPIO16	27	P1-36
P1-37	25	GPIO26	|	GPIO20/MOSI1	28	P1-38
P1-39		GND	|	GPIO21/SCLK1	29	P1-40

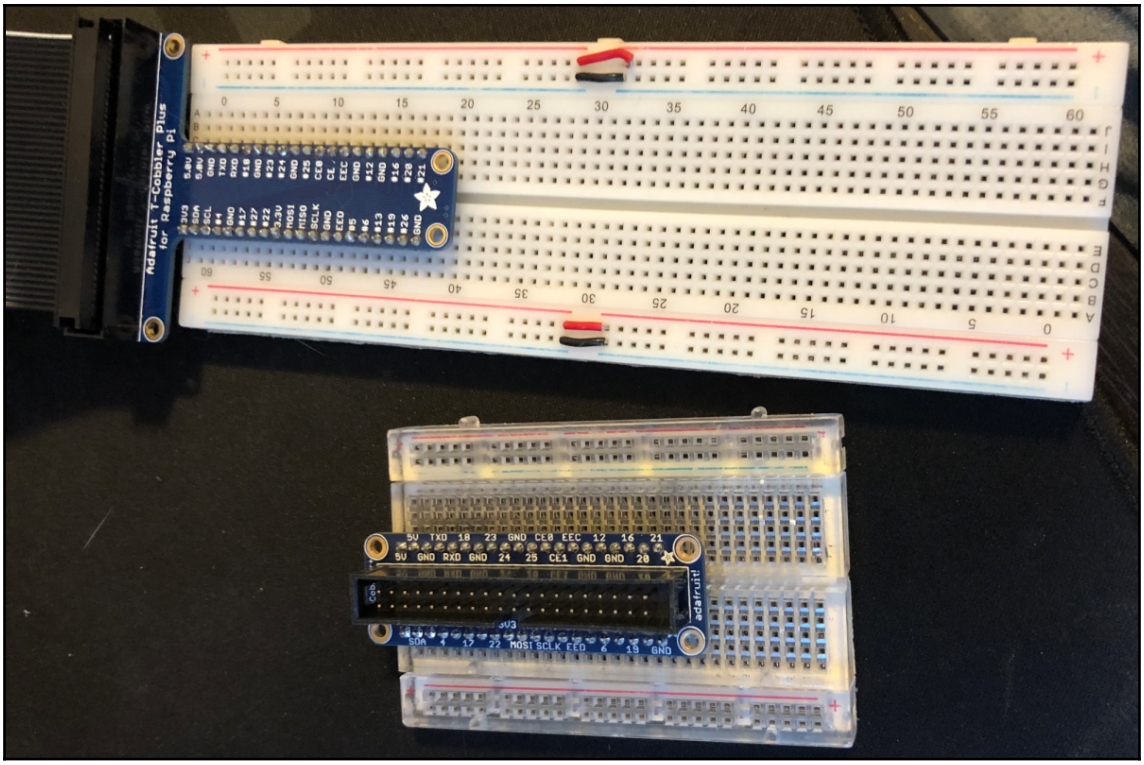
Adafruit T-Cobbler Plus
for Raspberry Pi
adafruit

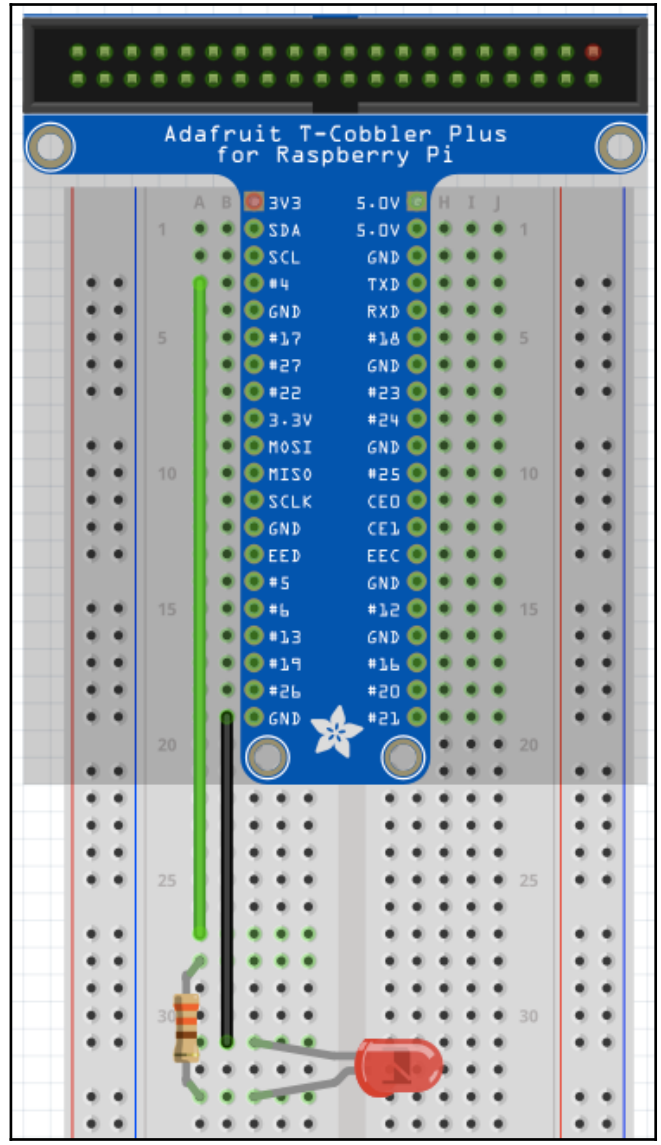
Adafruit T-Cobbler Plus
for Raspberry Pi
3V3
SDA
SCL
#4
GND
#17
#27
#22
3.3V
MOSI
MISO
SCLK
GND
EED
#5
#6
#13
#19
#26
GND
5.0V
5.0V
GND
TXD
RXD
#18
GND
#23
#24
GND
#25
CE0
CE1
EEC
GND
#12
GND
#16
#20
#21

Chapter 3: Building Interactive Projects with RGB LED

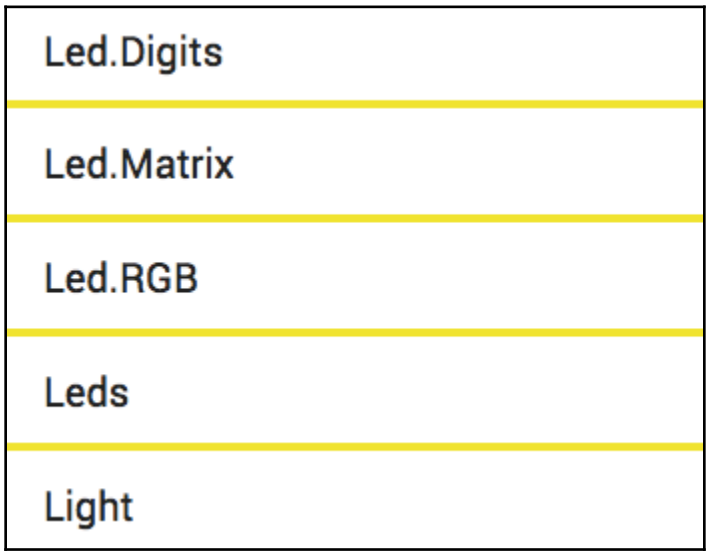

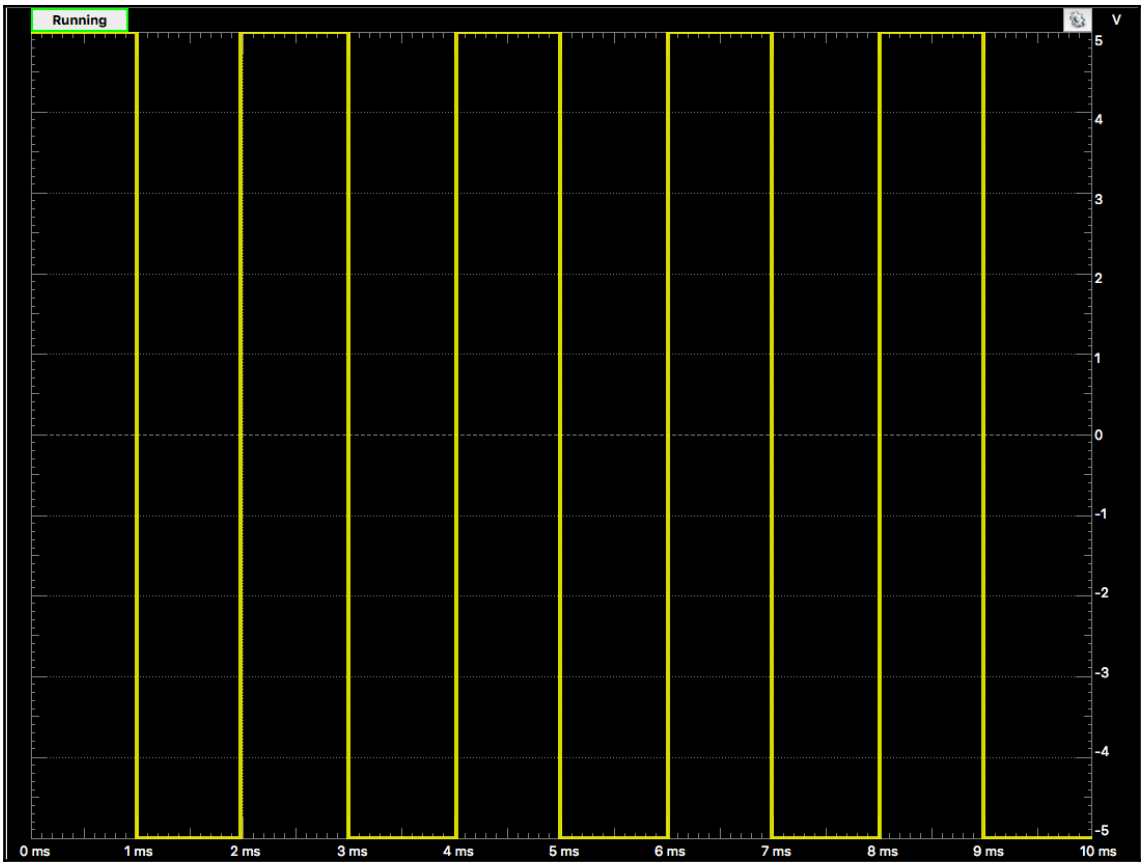
Running
V
5
4
3
2
1
0
-1
-2
-3
-4
-5
0 ms
1 ms
2 ms
3 ms
4 ms
5 ms
6 ms
7 ms
8 ms
9 ms
10 ms

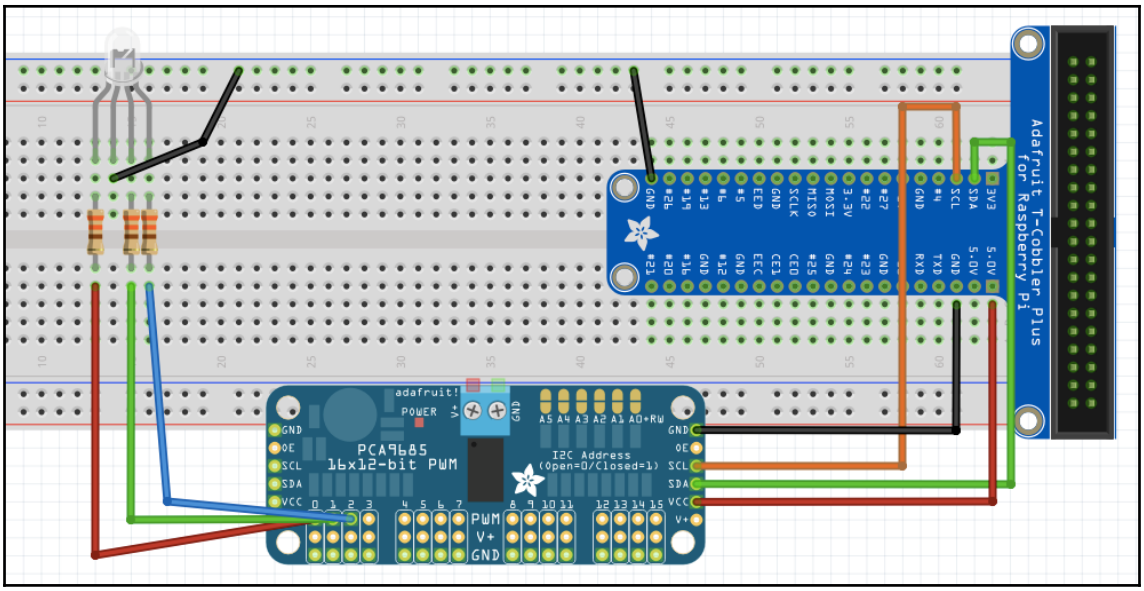
Adafruit T-Cobbler Plus
for Raspberry Pi
adafruit!
POWER
PCA9685
16x12-bit PWM
I2C Address
(Open=0/Closed=1)
A5 A4 A3 A2 A1 A0 +RW
GND
OE
SCL
SDA
VCC
V+
PWM
V+
GND

Chapter 4: Bringing in Input with Buttons

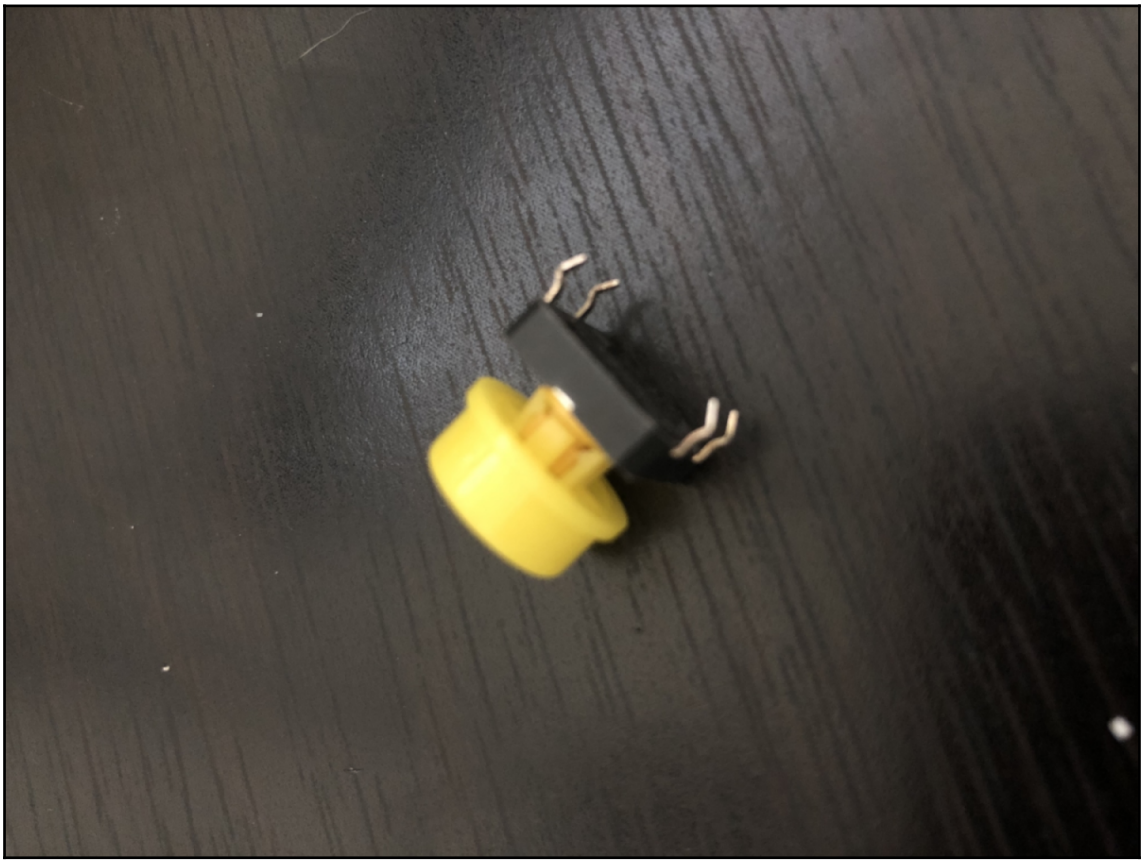

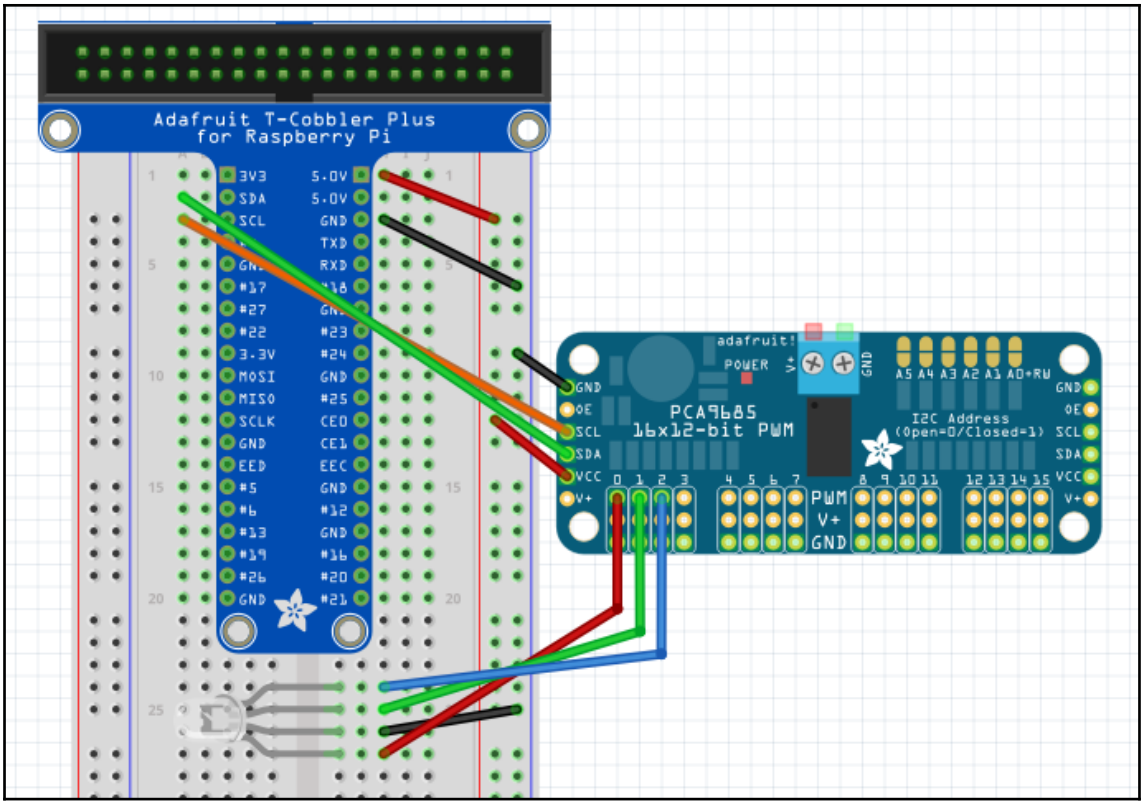
Adafruit T-Cobbler Plus
for Raspberry Pi
3V3
SDA
SCL
5.0V
5.0V
GND
TXD
RXD
#17
#27
#22
3.3V
MOSI
MISO
SCLK
GND
EED
#5
#6
#13
#19
#26
GND
#23
#24
GND
#25
CE0
CE1
EEC
GND
#12
GND
#16
#20
#21
adafruit!
POWER
V+
GND
A5 A4 A3 A2 A1 A0+RW
PCA9685
16x12-bit PWM
I2C Address
(Open=0/Closed=1)
GND
OE
SCL
SDA
VCC
V+
0 1 2 3
4 5 6 7
8 9 10 11
12 13 14 15
PWM
V+
GND

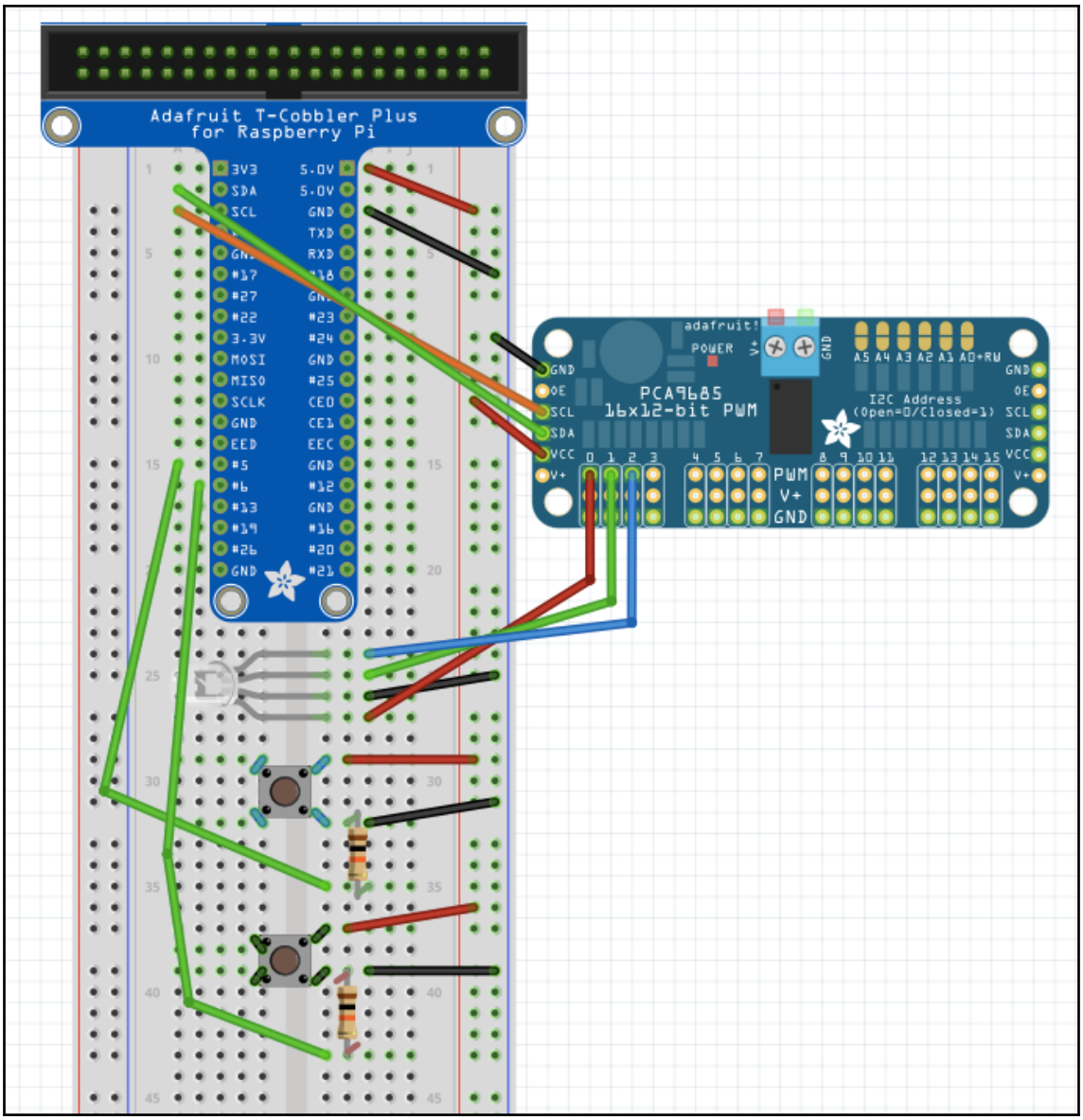
Adafruit T-Cobbler Plus
for Raspberry Pi
3V3
SDA
SCL
5.0V
5.0V
GND
TXD
RXD
MOSI
MISO
SCLK
GND
GND
GND
adafruit!
POWER
PCA9685
16x12-bit PWM
I2C Address
(Open=0/Closed=1)
A5 A4 A3 A2 A1 A0+RW
GND
OE
SCL
SDA
VCC
V+
PWM
V+
GND

Chapter 5: Using a Light Sensor to Create a Night-Light

Supported Light sensors:

- Photoreistors
  - Sparkfun
    - Mini Photocell
- TSL2561
  - Adafruit
  - Sparkfun
- EV3 Color & Light Sensor
  - Lego
- NXT Color Sensor
  - Lego

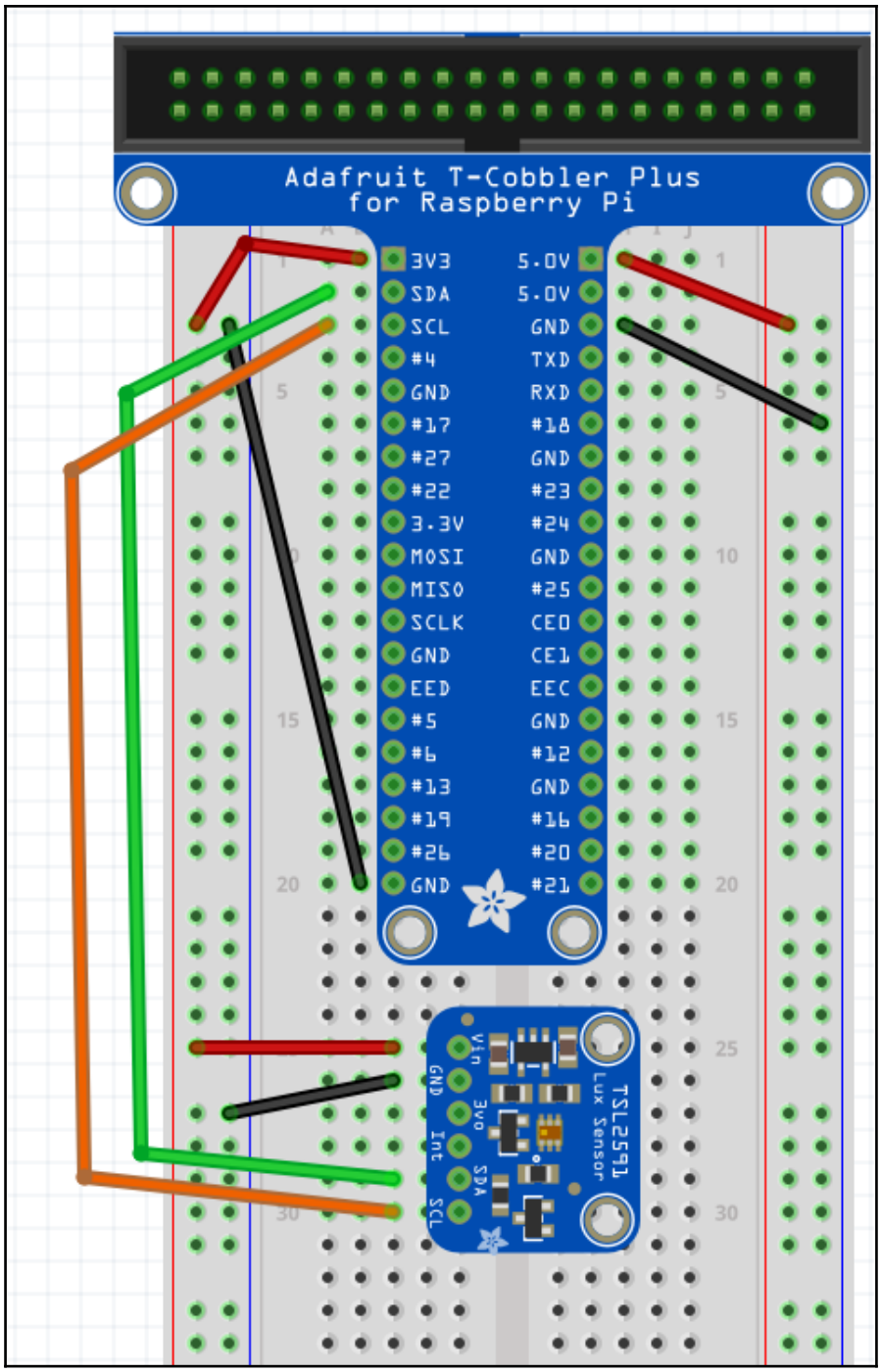
Adafruit T-Cobbler Plus
for Raspberry Pi
3V3
SDA
SCL
#4
GND
#17
#27
#22
3.3V
MOSI
MISO
SCLK
GND
EED
#5
#6
#13
#19
#26
GND
5.0V
5.0V
GND
TXD
RXD
#18
GND
#23
#24
GND
#25
CE0
CE1
EEC
GND
#12
GND
#16
#20
#21
Vin
3Vo
Int
SDA
SCL
GND
TSL2591
Lux Sensor

Shape

Property Name	Description	Read Only
`id`	A user definable id value. Defaults to a generated uid	No
`pin`	The pin address that the Sensor is attached to	No
`threshold`	The change threshold (+/- value). Defaults to 1	No
`boolean`	ADC value scaled to a boolean.	Yes
`raw`	ADC value (0-1023).	Yes
`analog`	ADC reading *scaled* to 8 bit values (0-255).	Yes
`constrained`	ADC reading *constrained* to 8 bit values (0-255).	Yes
`value`	ADC reading, scaled.	Yes
`freq`	The rate in milliseconds to emit the data event. Disables the event if set to `null`. (>= v0.9.12)	No

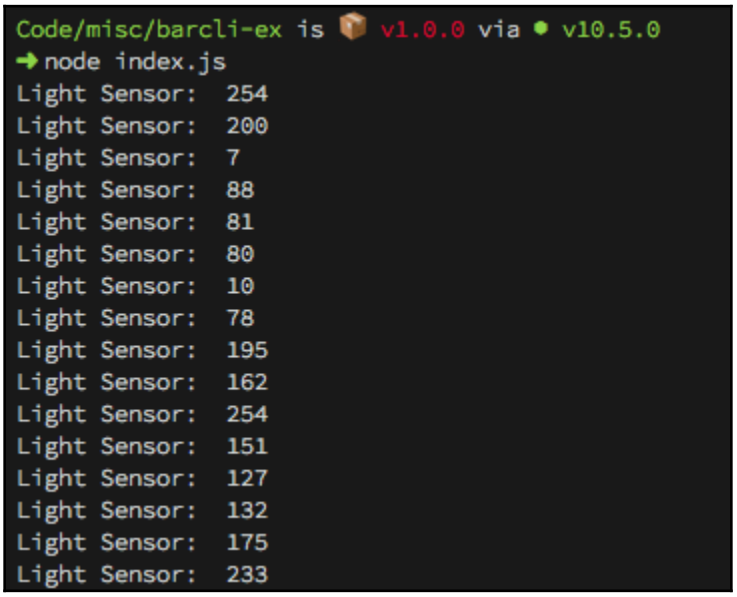

1534701097540 Repl Initialized
>>
Light Sensor: |
| 136
1534701103424 Board Closing. pe .exit)
pi@raspberrypi:~/hands-on-robotics-with-javascript/ch5 $ _

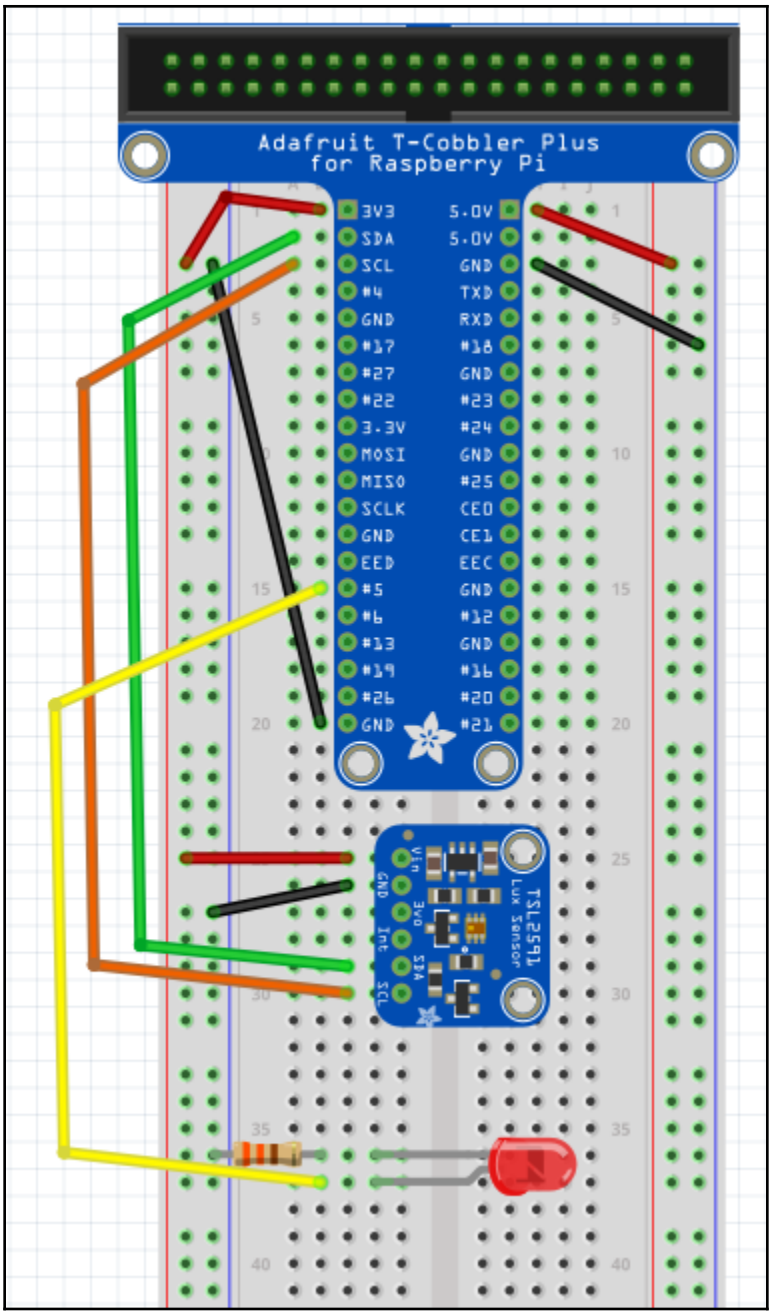
Adafruit T-Cobbler Plus
for Raspberry Pi
3V3
SDA
SCL
#4
GND
#17
#27
#22
3.3V
MOSI
MISO
SCLK
GND
EED
#5
#6
#13
#19
#26
GND
5.0V
5.0V
GND
TXD
RXD
#18
GND
#23
#24
GND
#25
CE0
CE1
EEC
GND
#12
GND
#16
#20
#21
Vin
3Vo
GND
Int
SDA
SCL
TSL2591
Lux Sensor

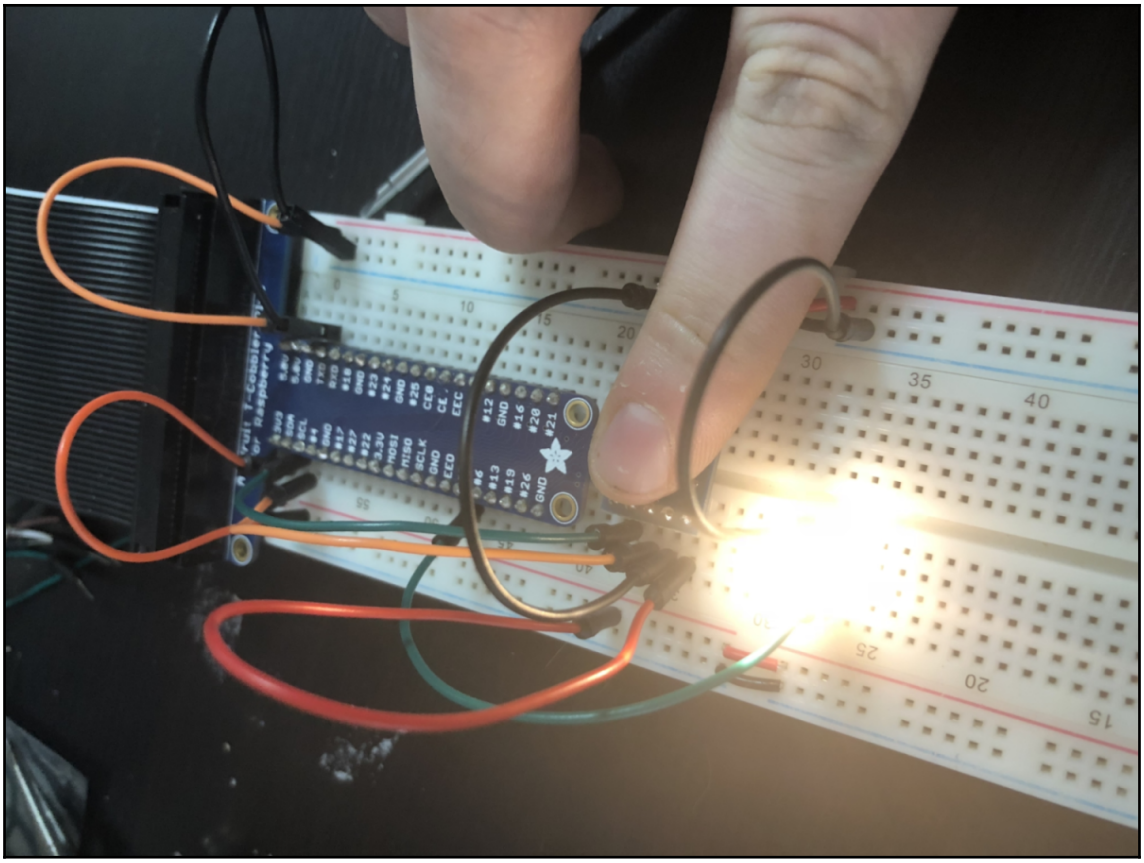

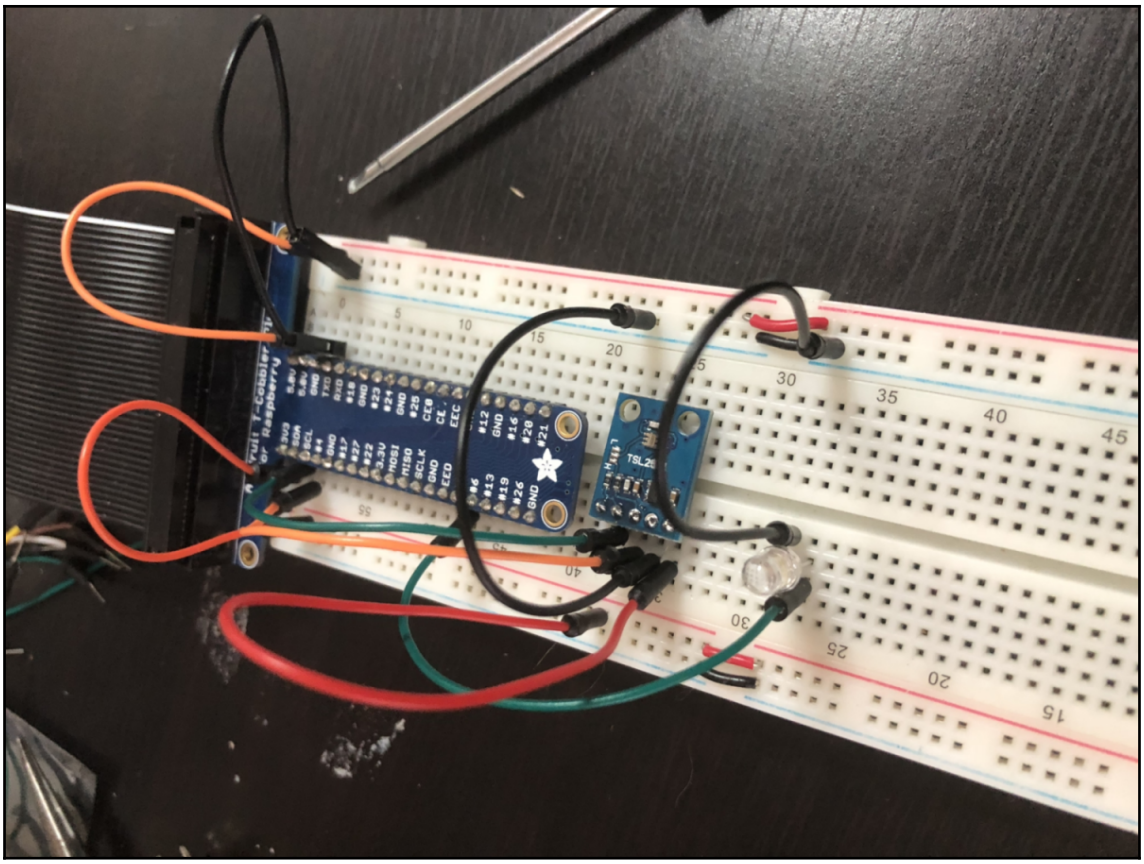

Chapter 6: Using Motors to Move Your Project

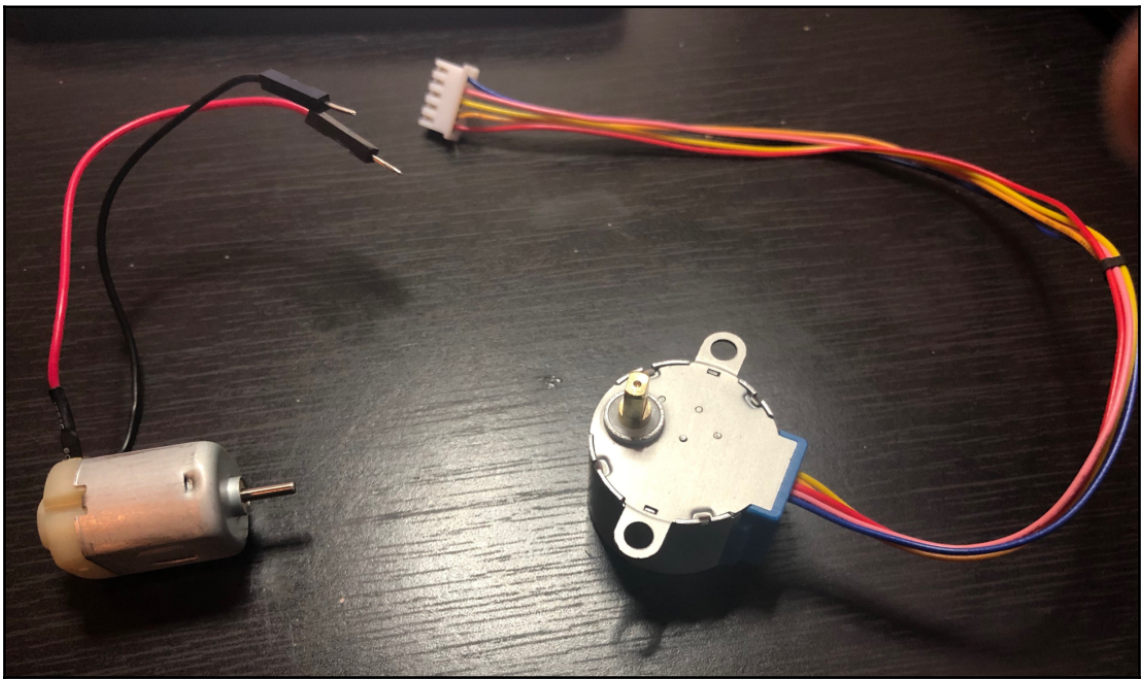

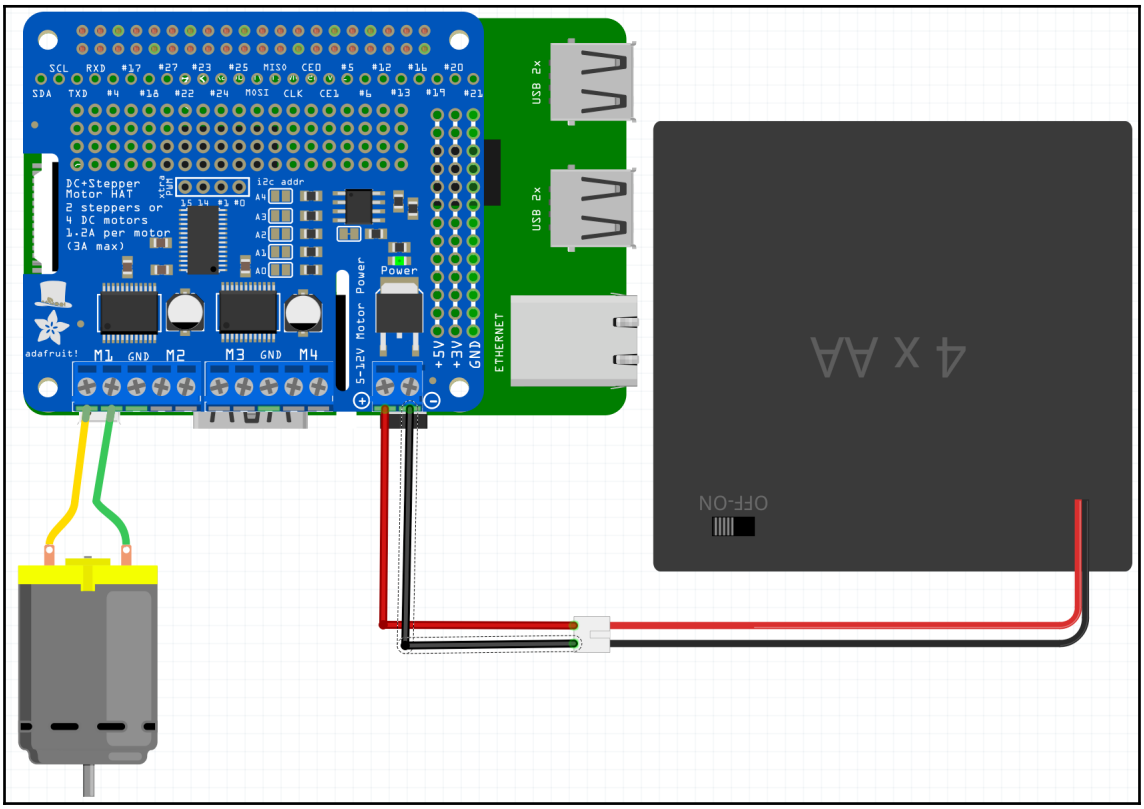
SCL RXD #17 #27 #23 #25 MISO CE0 #5 #12 #16 #20
SDA TXD #4 #18 #22 #24 MOSI CLK CE1 #6 #13 #19 #21
DC+Stepper
Motor HAT
2 steppers or
4 DC motors
1.2A per motor
(3A max)
i2c addr
A4
A3
A2
A1
A0
Power
adafruit!
M1 GND M2 M3 GND M4
5-12V Motor Power
+5V +3V GND
USB 2x
USB 2x
ETHERNET
4 x AA
OFF-ON

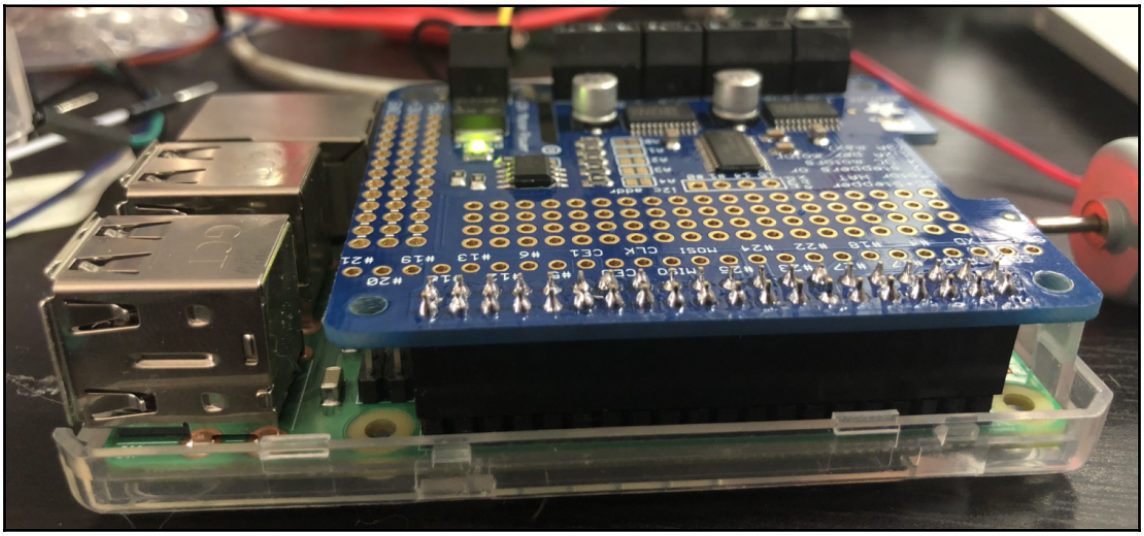

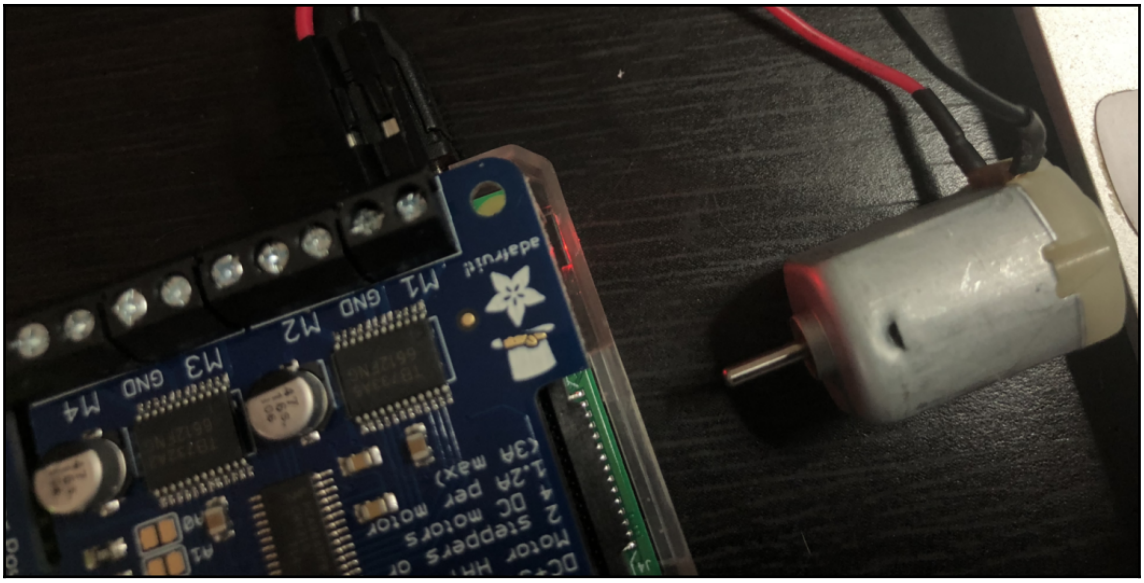
adafruit
M1 GND M2
M3 GND M4

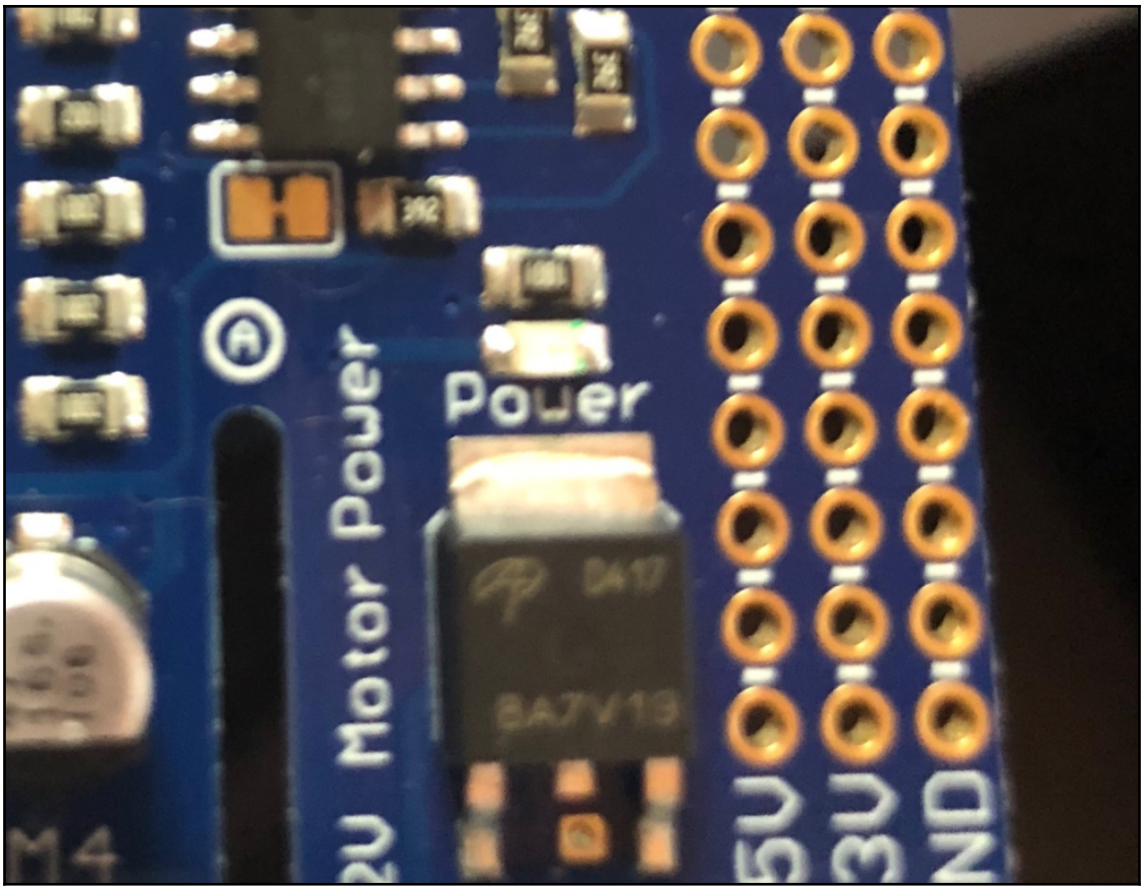
Power
M4
5V
3V
GND

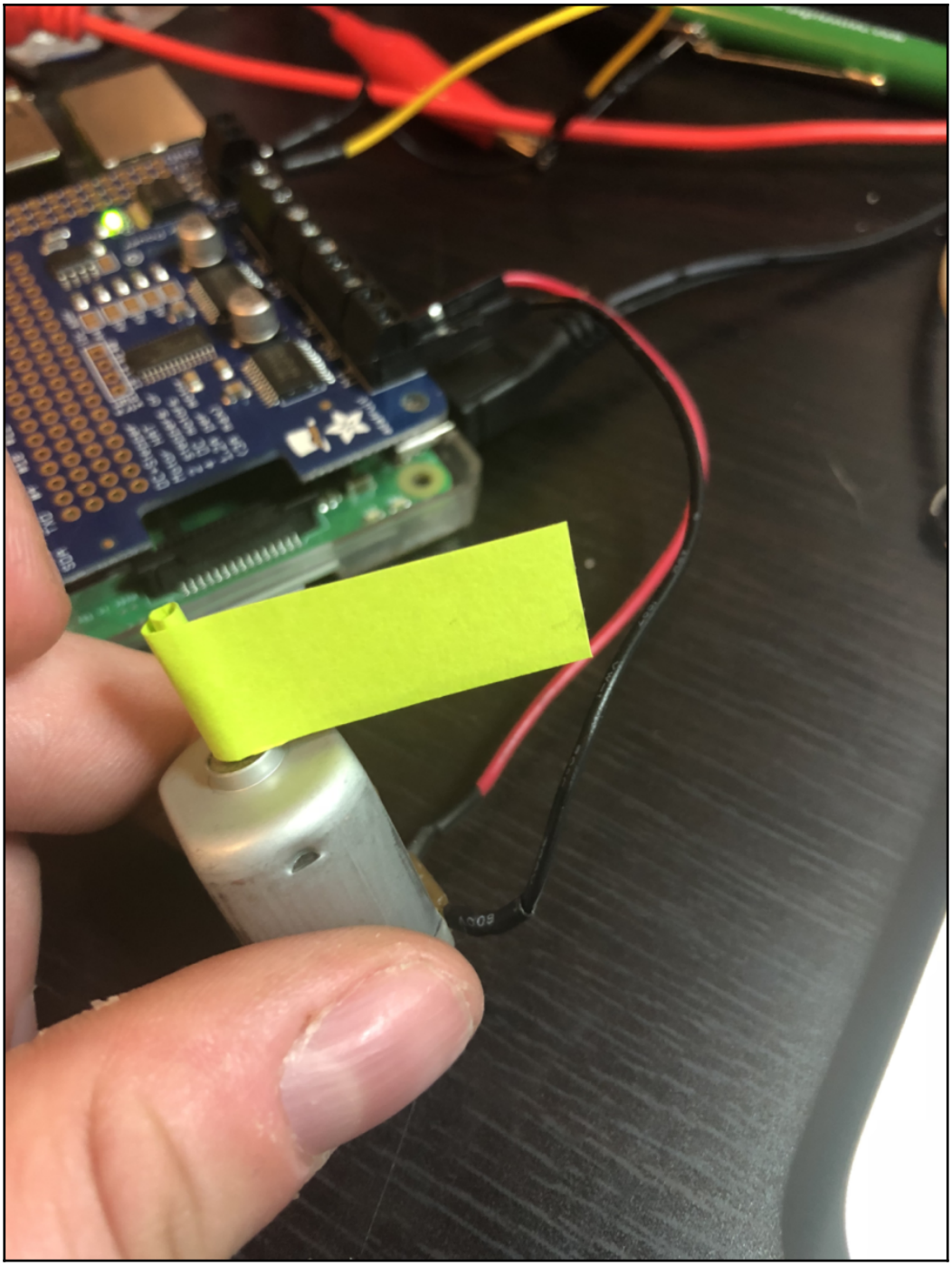

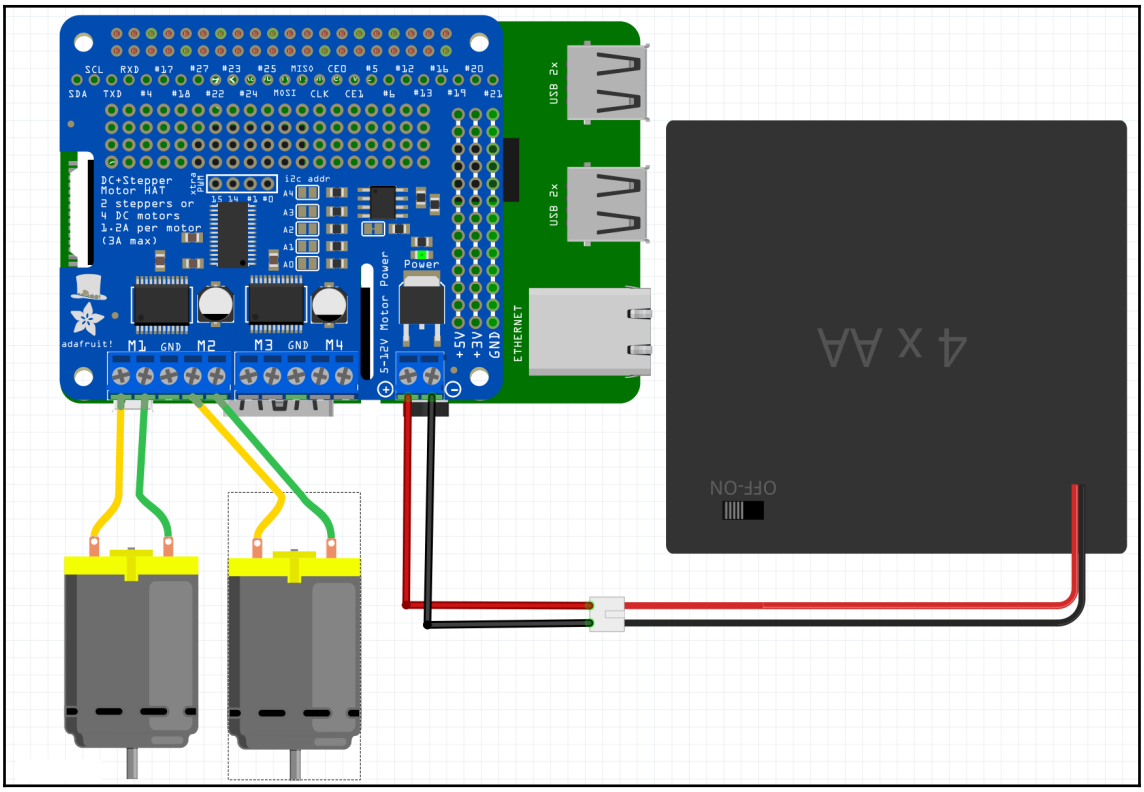
SCL RXD #17 #27 #23 #25 MISO CE0 #5 #12 #16 #20
SDA TXD #4 #18 #22 #24 MOSI CLK CE1 #6 #13 #19 #21
DC+Stepper
Motor HAT
2 steppers or
4 DC motors
1.2A per motor
(3A max)
STEMMA QWIIC
i2c addr
A4
A3
A2
A1
A0
Power
adafruit!
M1 GND M2 M3 GND M4
5-12V Motor Power
+5V +3V GND
USB 2x
USB 2x
ETHERNET
4 x AA
OFF-ON

Chapter 7: Using Servos for Measured Movement

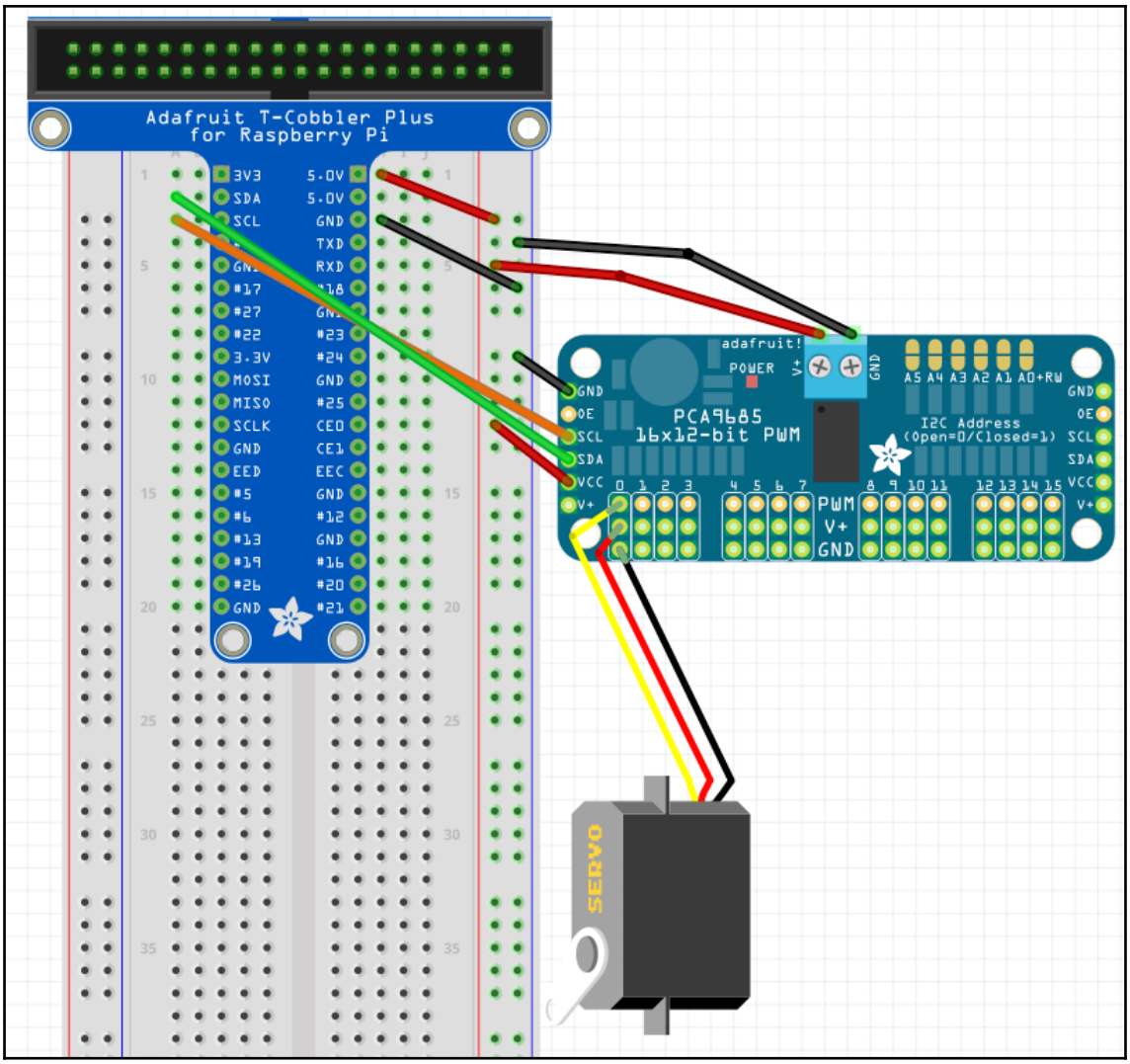
Adafruit T-Cobbler Plus
for Raspberry Pi
3V3
SDA
SCL
5.0V
5.0V
GND
TXD
RXD
#17
#18
#27
#22
#23
3.3V
#24
MOSI
GND
MISO
#25
SCLK
CE0
GND
CE1
EED
EEC
#5
GND
#6
#12
#13
GND
#19
#16
#26
#20
GND
#21
adafruit!
POWER
V+
GND
A5 A4 A3 A2 A1 A0+RW
PCA9685
16x12-bit PWM
I2C Address
(Open=0/Closed=1)
GND
OE
SCL
SDA
VCC
V+
0 1 2 3
4 5 6 7
8 9 10 11
12 13 14 15
PWM
V+
GND
SERVO

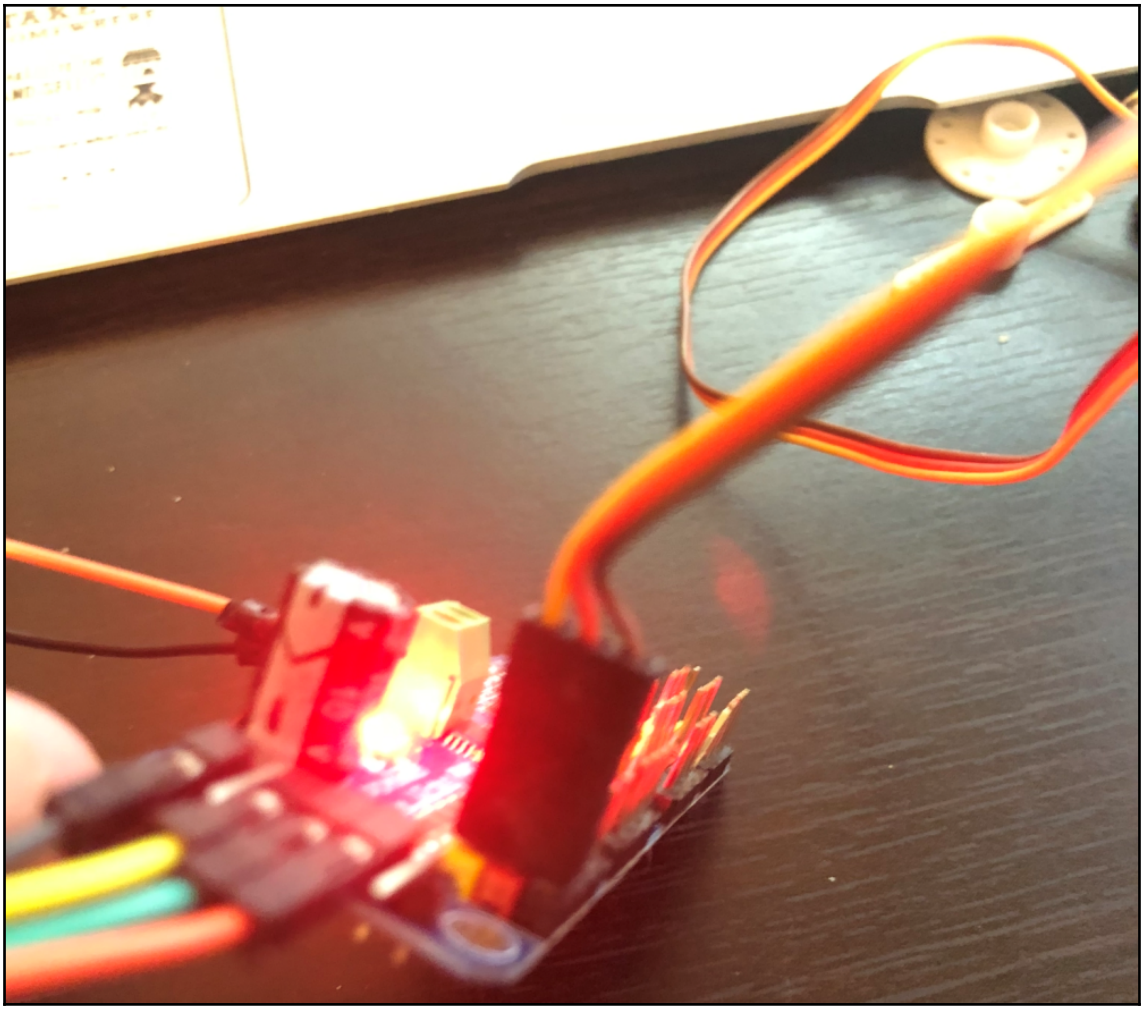

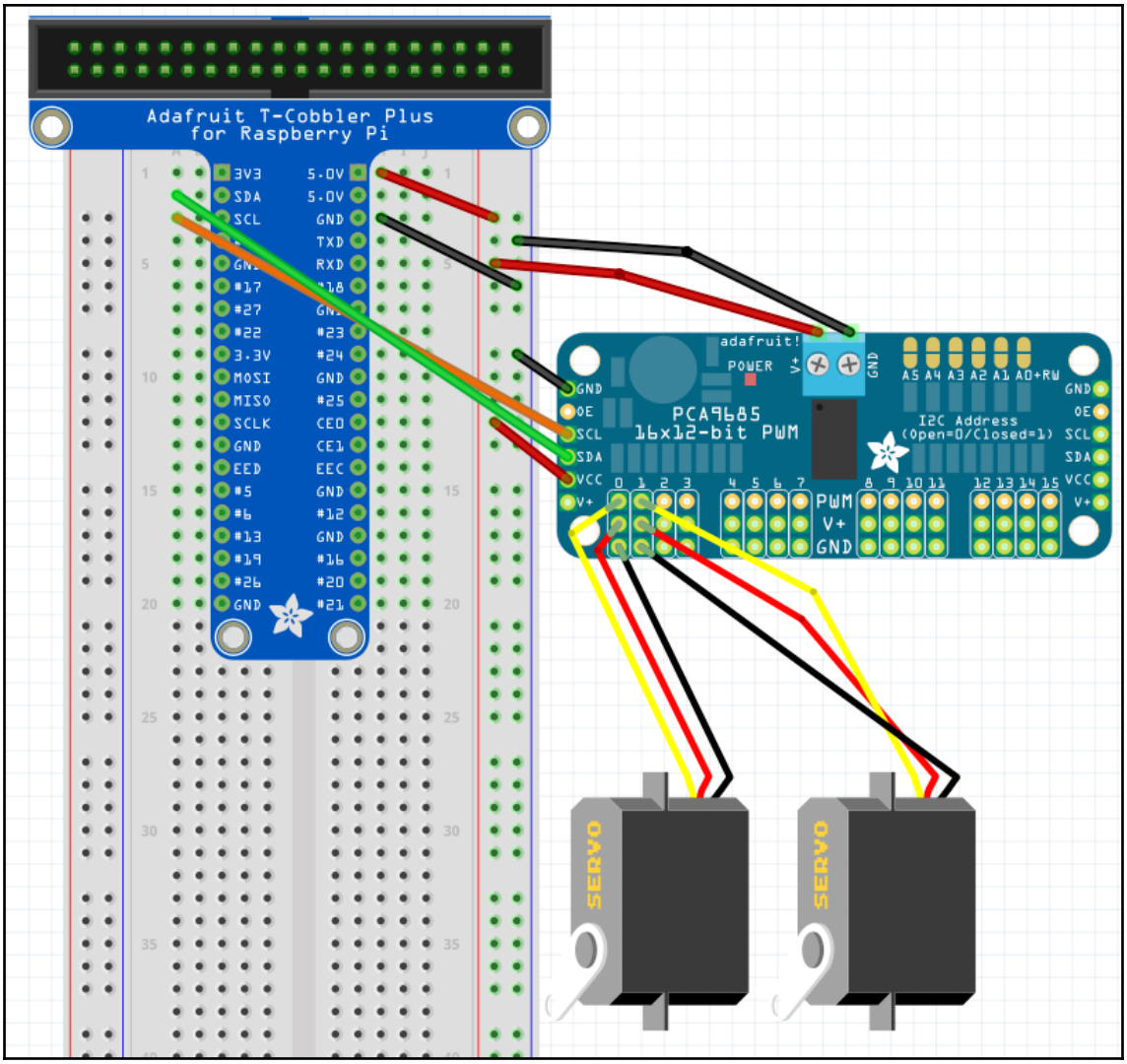

Adafruit T-Cobbler Plus
for Raspberry Pi
3V3
SDA
SCL
5.0V
5.0V
GND
TXD
RXD
#17
#27
#22
3.3V
MOSI
MISO
SCLK
GND
EED
#5
#6
#13
#19
#26
GND
#23
#24
GND
#25
CE0
CE1
EEC
GND
#12
GND
#16
#20
#21
adafruit!
POWER
V+
GND
A5 A4 A3 A2 A1 A0+RW
PCA9685
16x12-bit PWM
I2C Address
(Open=0/Closed=1)
GND
OE
SCL
SDA
VCC
V+
0 1 2 3
4 5 6 7
8 9 10 11
12 13 14 15
PWM
V+
GND
SERVO
SERVO

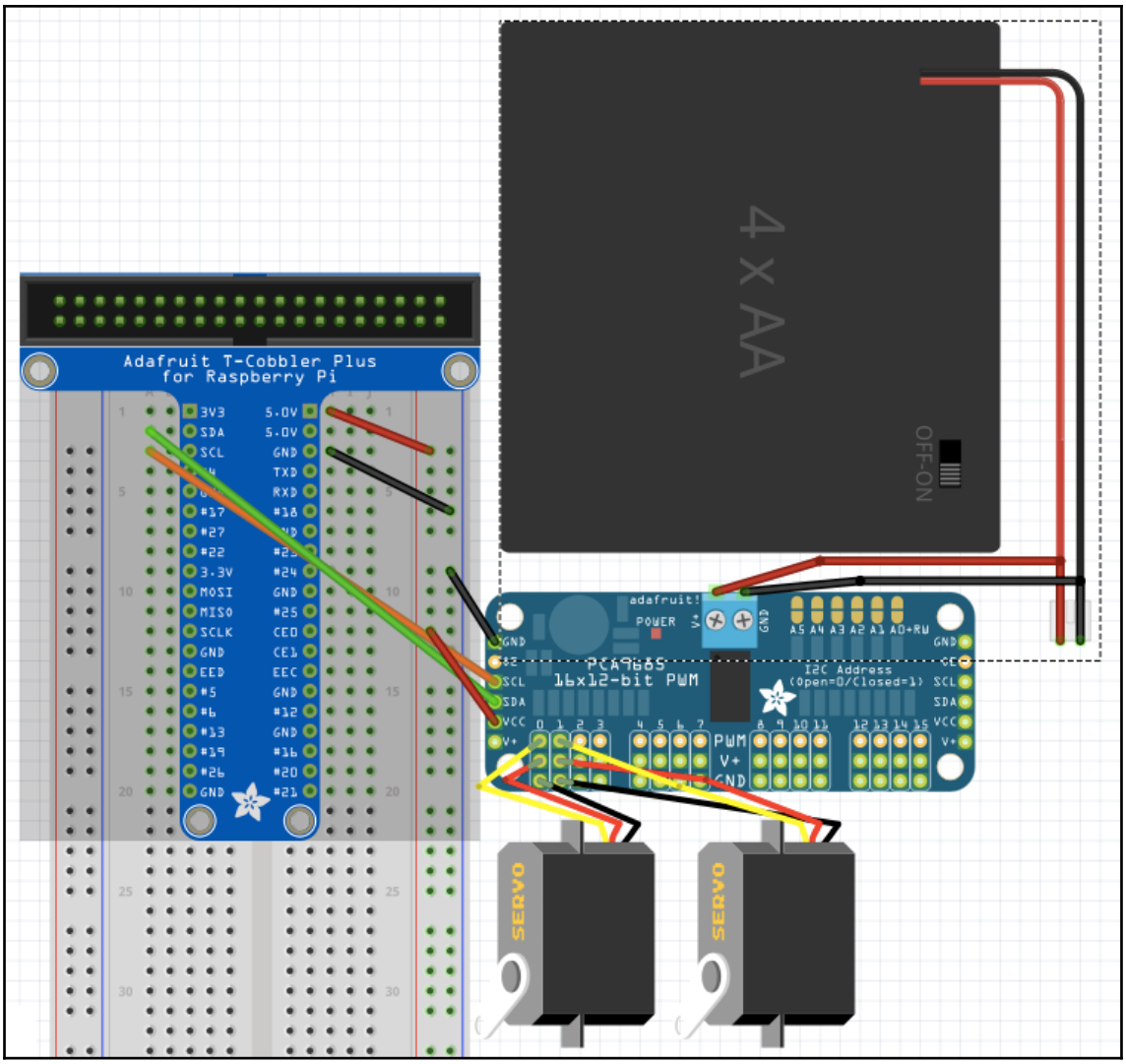
Adafruit T-Cobbler Plus
for Raspberry Pi
4 x AA
OFF-ON
adafruit!
POWER
PCA9685
16x12-bit PWM
I2C Address
(Open=0/Closed=1)
PWM
V+
GND
SERVO
SERVO

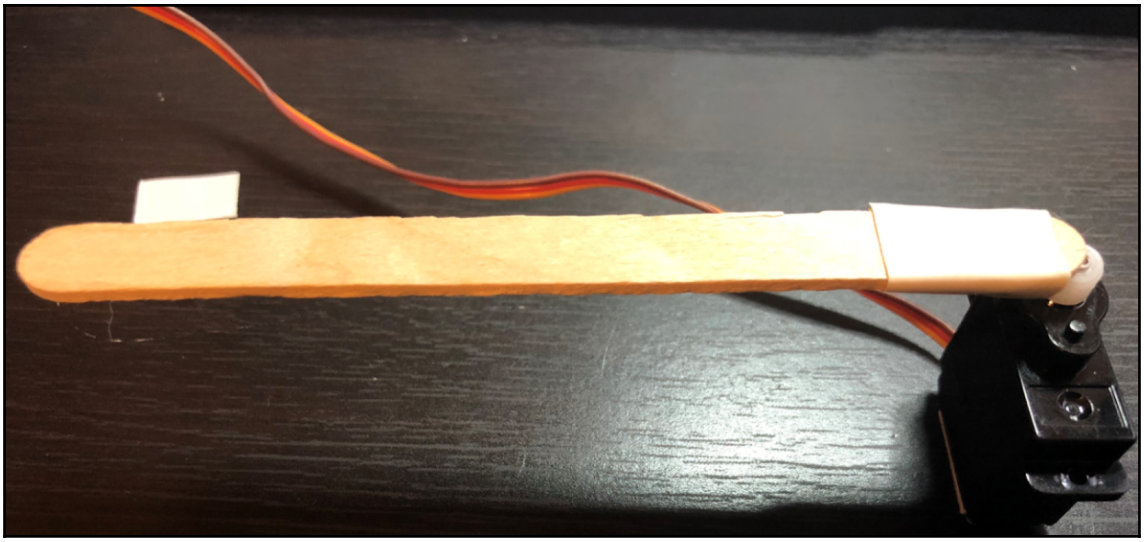

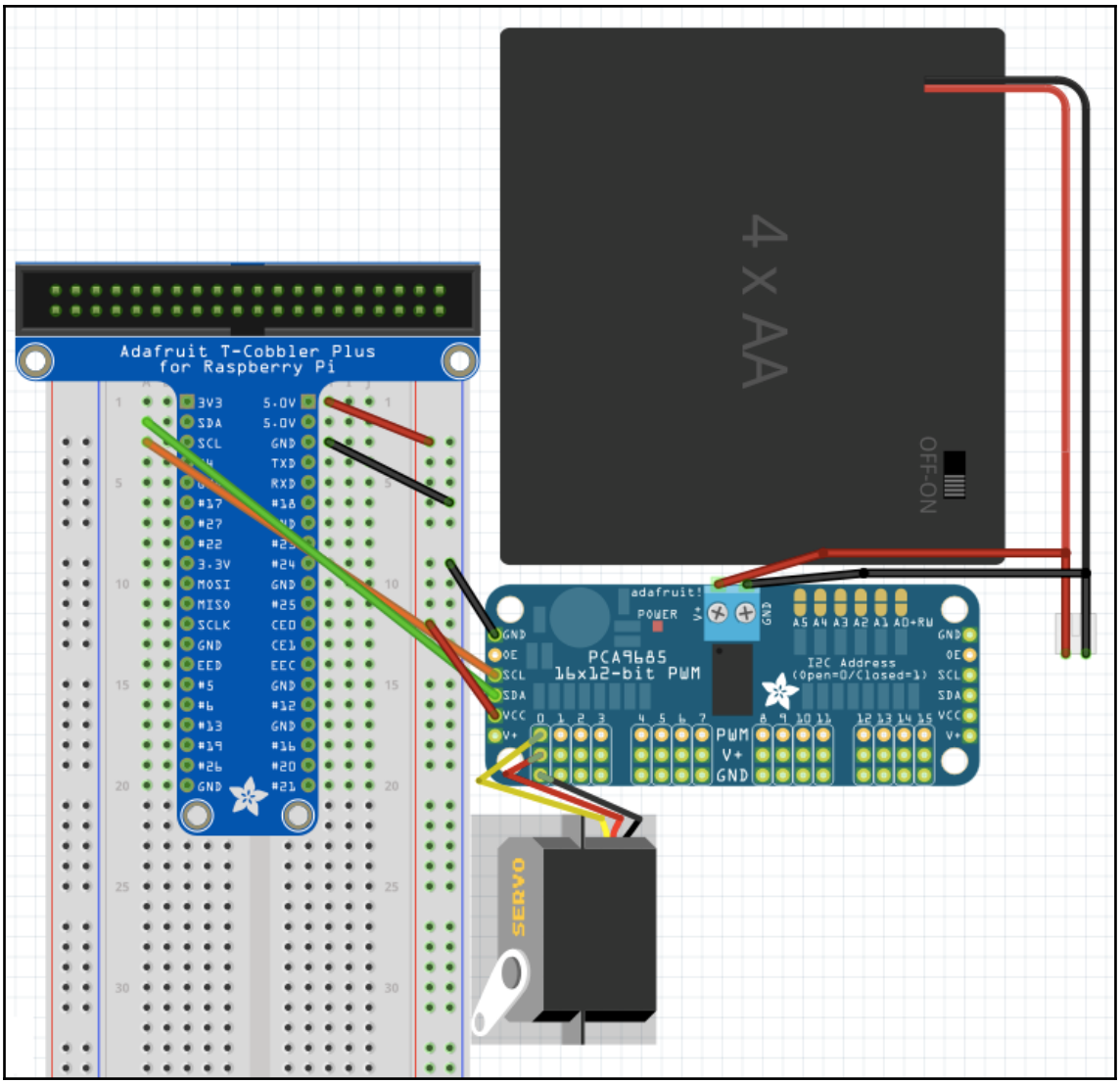
Adafruit T-Cobbler Plus
for Raspberry Pi
4 x AA
OFF-ON
adafruit!
POWER
PCA9685
16x12-bit PWM
I2C Address
(Open=0/Closed=1)
PWM
V+
GND
SERVO

Chapter 8: The Animation Library

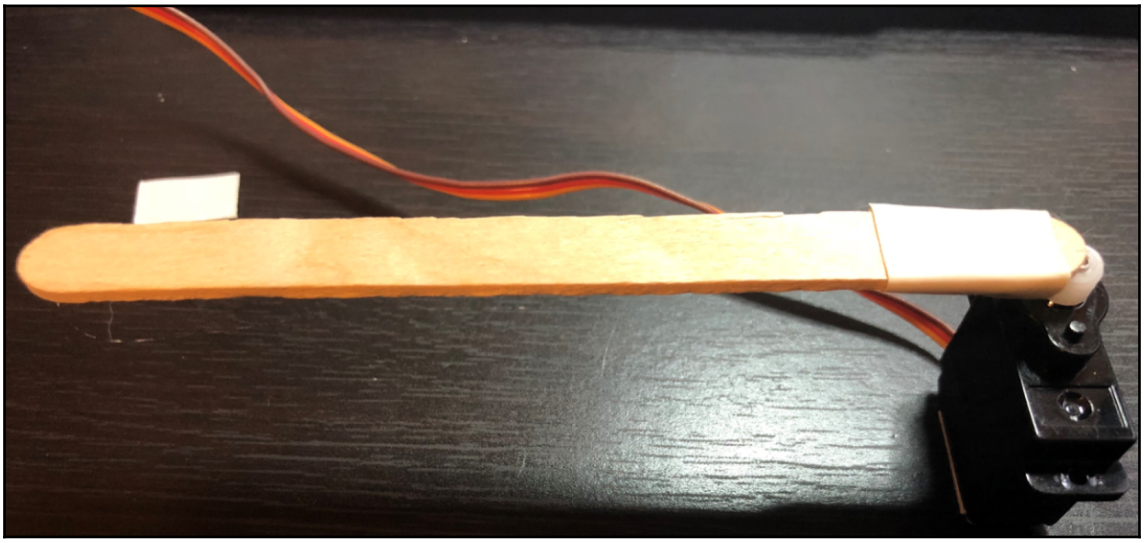

Chapter 9: Getting the Information You Need

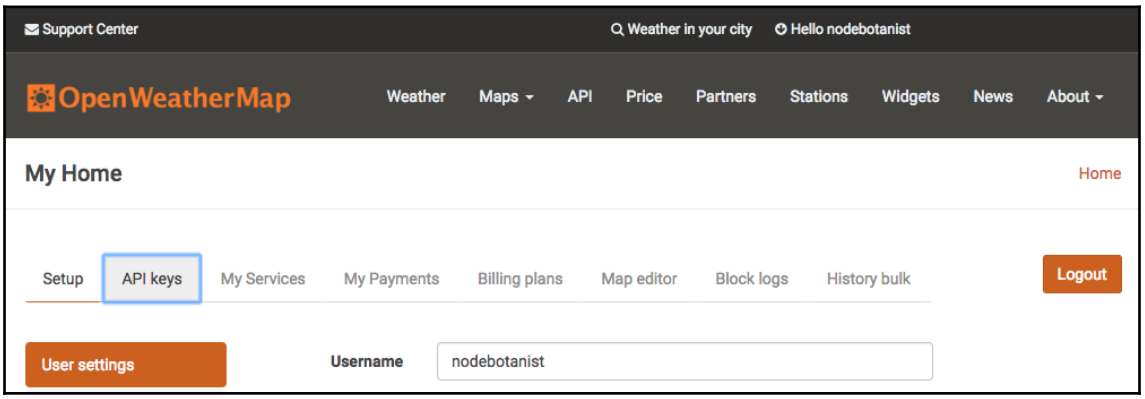

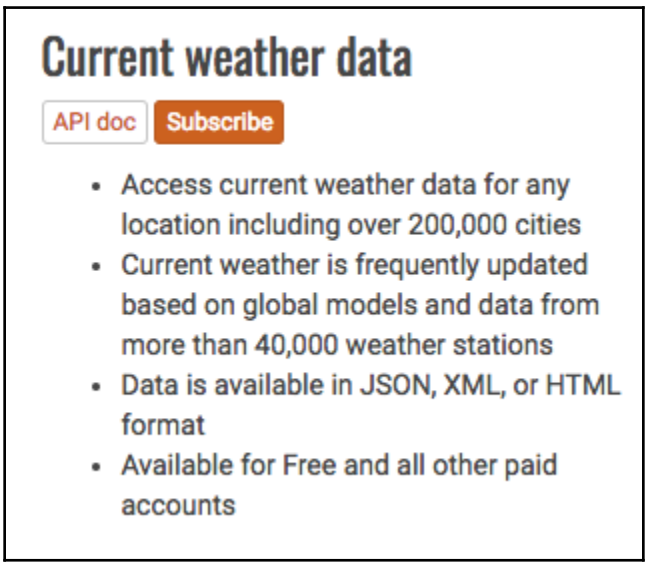

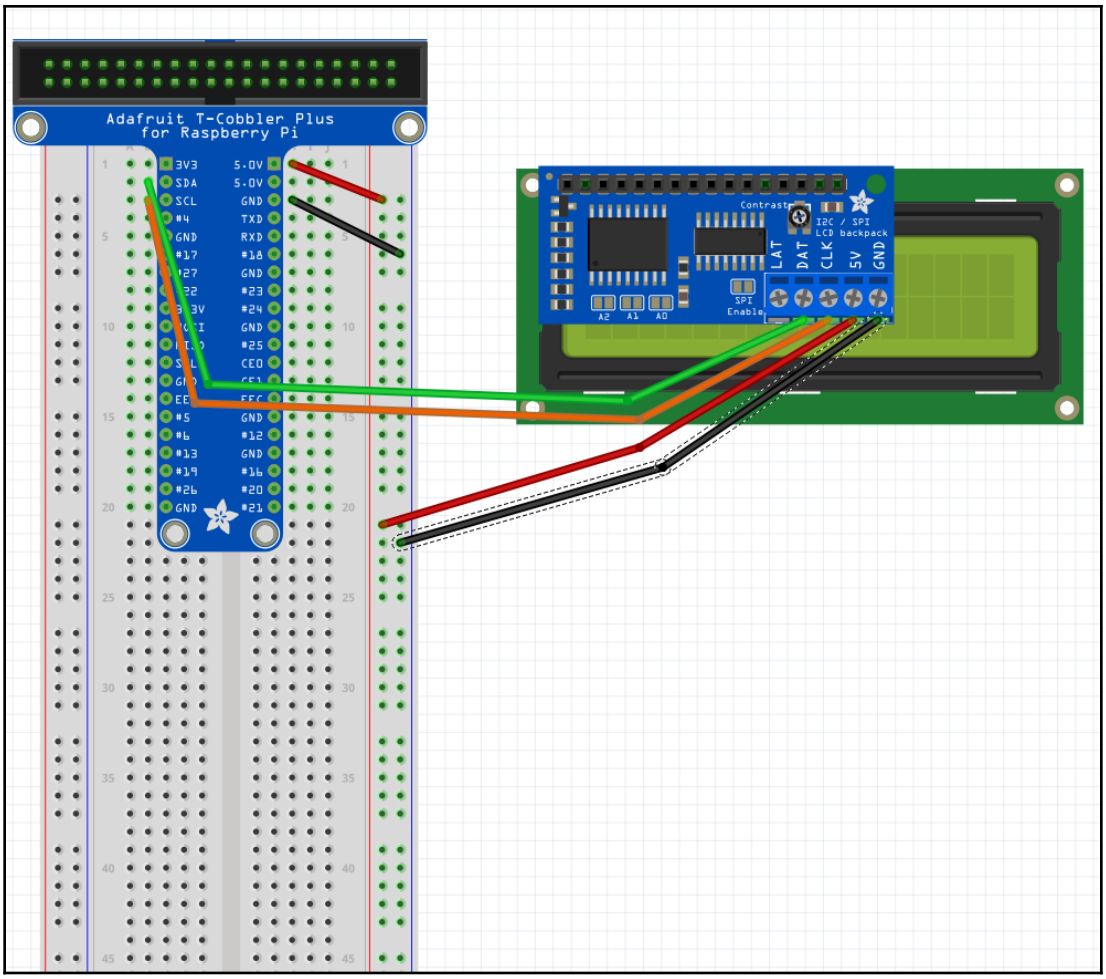
Adafruit T-Cobbler Plus
for Raspberry Pi
3V3
SDA
SCL
#4
GND
#17
#27
#22
3V3
GND
#25
CE0
#5
#6
#13
#19
#26
GND
5.0V
5.0V
GND
TXD
RXD
GND
#18
#23
#24
GND
#12
GND
#16
#20
#21
Contrast
I2C / SPI
LCD backpack
LAT
DAT
CLK
5V
GND
SPI
Enable
A2
A1
A0

```
▼<div id="domain-main-content">
   <h1 id="seo-h1">Is johnny-five.io down?</h1>
  ▼<p> == $0
     "
     It's just you.  "
     <a href="https://johnny-five.io" class="domain">johnny-five.io
     </a>
     " is up.
     "
   </p>
  ▶<ul>…</ul>
   <p></p>
  ▶<div id="showcontent">…</div>
  </div>
  <div id="domain-side-actions">
```

```
  <section id="tabs-1">
    <div id="domain-main-content">
      <h1 id="seo-h1">Is johnny-five.io down?</h1>

      <p>
It's just you.  <a href='https://johnny-five.io' class="domain">johnny-five.io</a></span>
 is up.
</p>
```

Chapter 10: Using MQTT to Talk to Things on the Internet

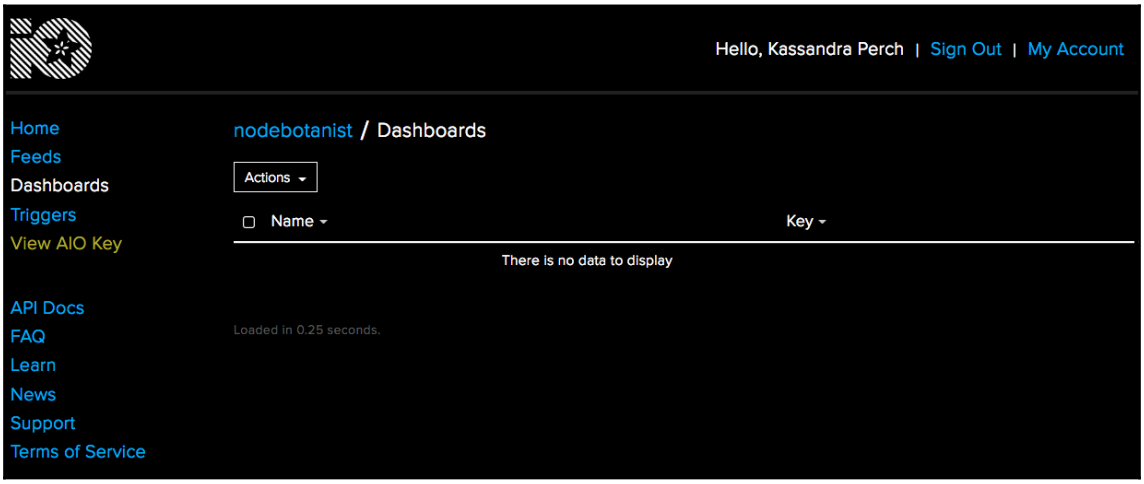

nodebotanist / Feeds / Hands-on-robotics-with-js
There is no data to display
Actions
VALUE
CREATED
LOCATION
There is no data to display
Feed Information
Manage feed name, key, description, and tags.
Privacy
This feed is: private.
Only you can see it.
Sharing
Not shared yet
Feed History
Feed history is ON.
No data is recorded.
Notifications
You have no notifications active for this feed.
Disable Feed
Disabling a feed will remove it from your feed count and prevent you from adding new data to it.
License
No Default License

Actions
VALUE
CREATED
LOCATION
Hello from the Pi!
a few seconds ago
2018-08-18 2:42:51 p..

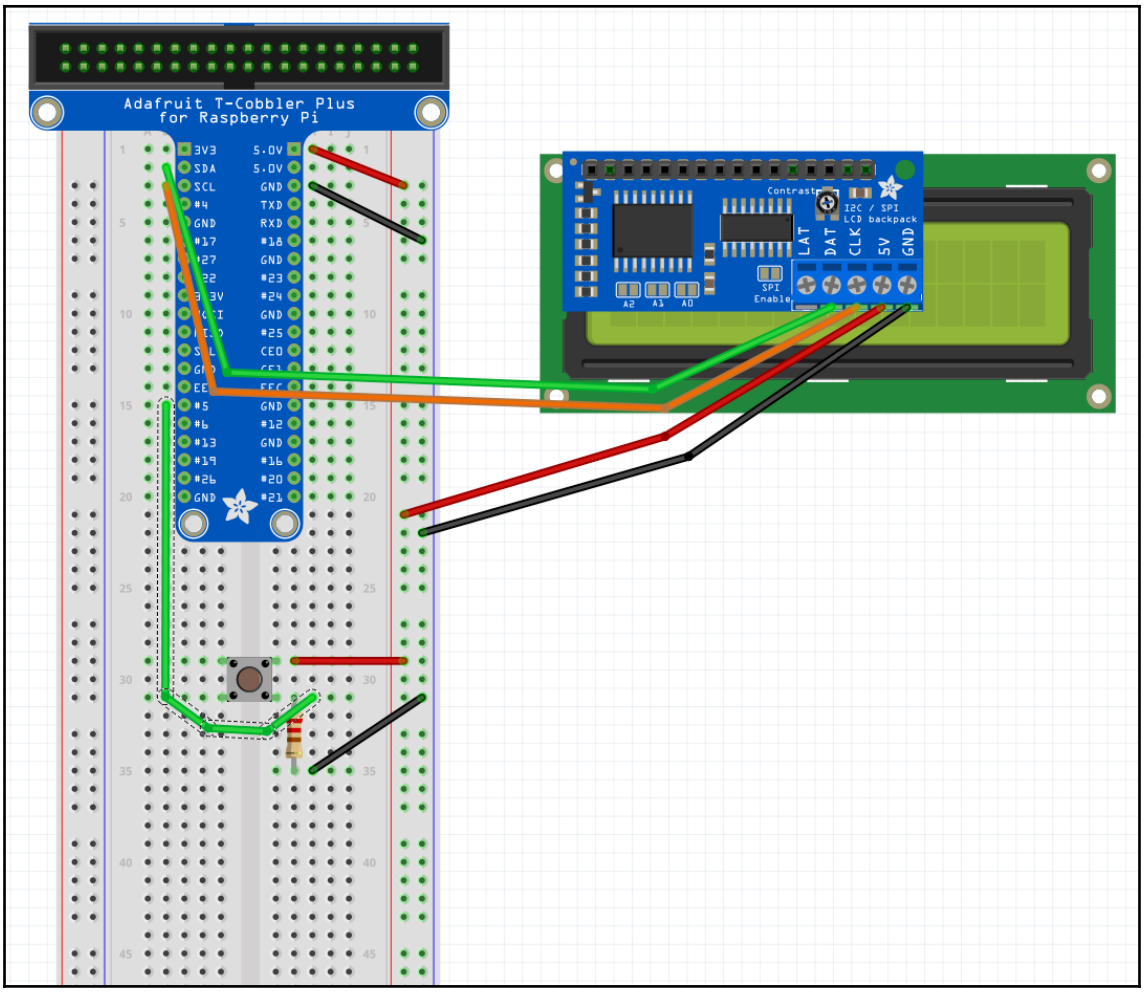
Adafruit T-Cobbler Plus
for Raspberry Pi
3V3
SDA
SCL
#4
GND
#17
#27
#22
3V3
#5
#6
#13
#19
#26
GND
5.0V
5.0V
GND
TXD
RXD
GND
#18
#23
#24
GND
#25
CE0
FFC
GND
#12
GND
#16
#20
#21
Contrast
I2C / SPI
LCD backpack
LAT
DAT
CLK
5V
GND
A2
A1
A0
SPI
Enable

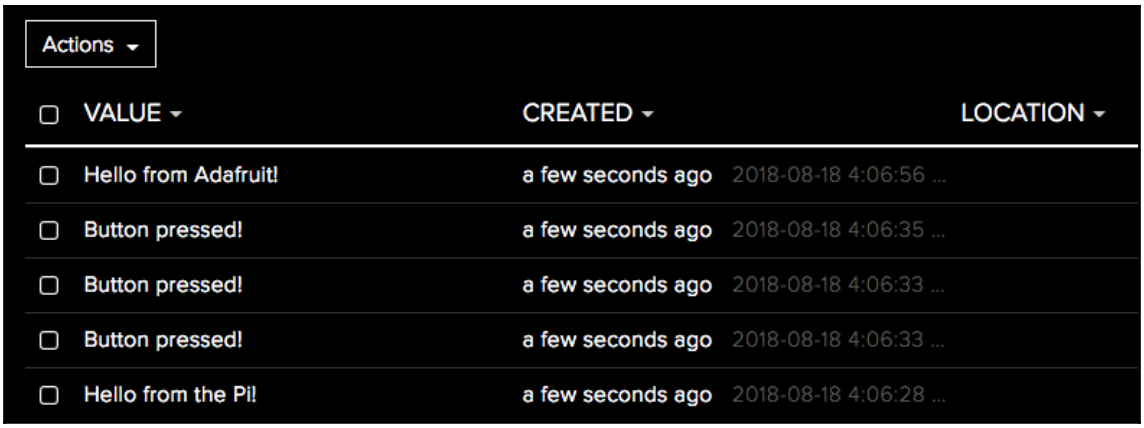
Actions
VALUE
CREATED
LOCATION
Hello from Adafruit!
a few seconds ago
2018-08-18 4:06:56 ...
Button pressed!
a few seconds ago
2018-08-18 4:06:35 ...
Button pressed!
a few seconds ago
2018-08-18 4:06:33 ...
Button pressed!
a few seconds ago
2018-08-18 4:06:33 ...
Hello from the Pi!
a few seconds ago
2018-08-18 4:06:28 ...

nodebotanist/fee
Button pressed!

nodebot.mist.fee
Hello Pi!

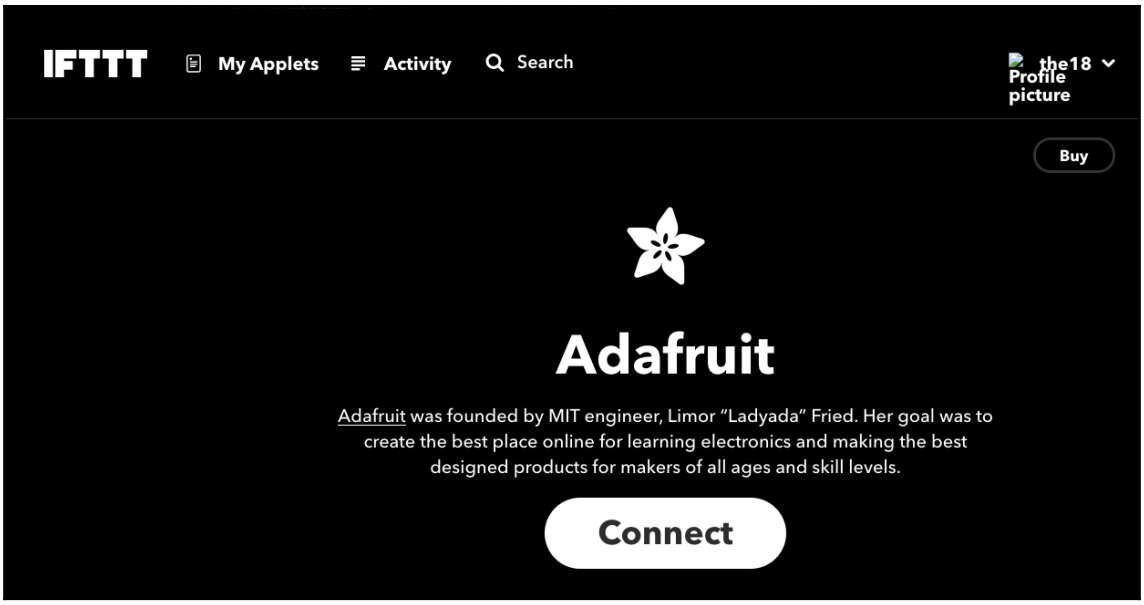
IFTTT
My Applets
Activity
Search
the18
Profile picture
Buy
Adafruit
Adafruit was founded by MIT engineer, Limor "Ladyada" Fried. Her goal was to create the best place online for learning electronics and making the best designed products for makers of all ages and skill levels.
Connect

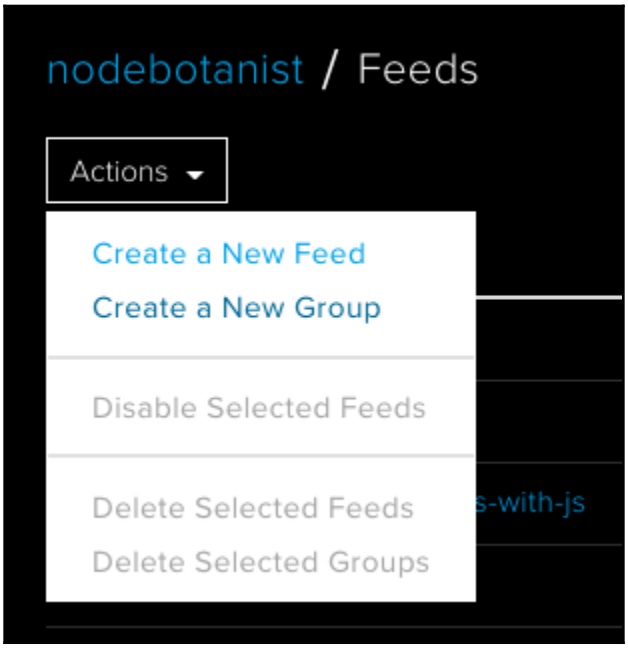
nodebotanist / Feeds
Actions
Create a New Feed
Create a New Group
Disable Selected Feeds
Delete Selected Feeds
Delete Selected Groups
s-with-js

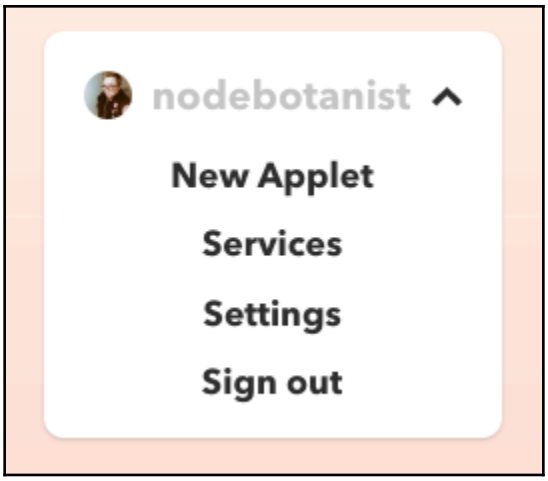
nodebotanist
New Applet
Services
Settings
Sign out

New Applet
if this then that

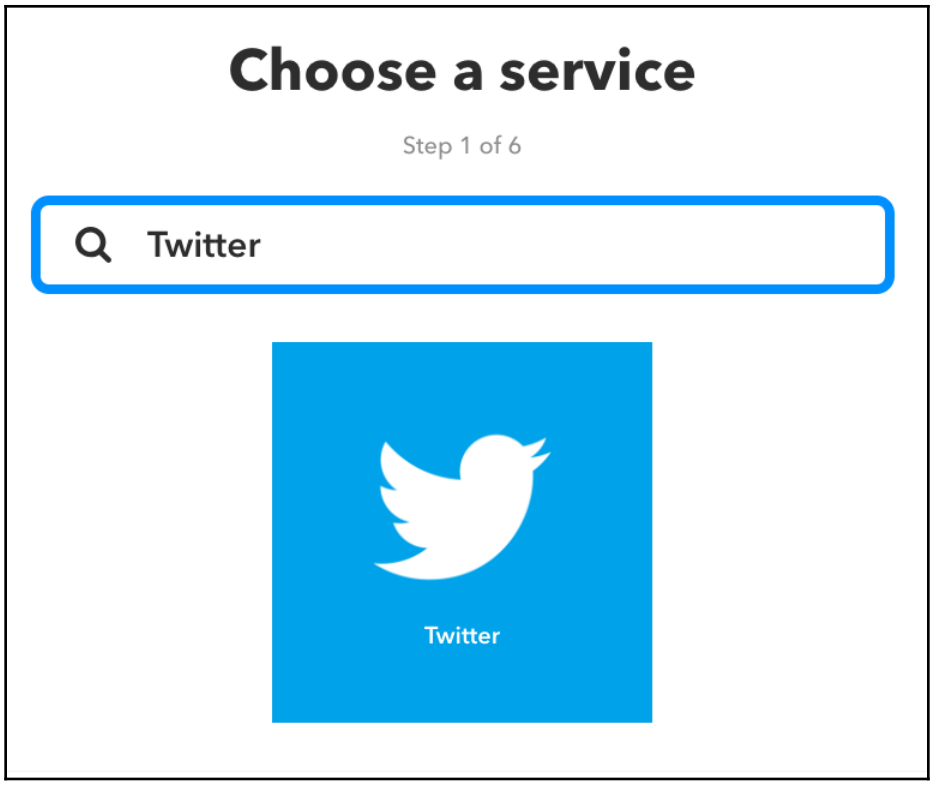
Choose a service
Step 1 of 6
Twitter
Twitter

if
then
that

Complete action fields

Step 5 of 6

Send data to Adafruit IO

This Action will send data to a feed in your Adafruit IO account.

Feed name

twitter

The name of the feed to save data to.

Data to save

The data to be saved to your feed.

Add ingredient

Create action

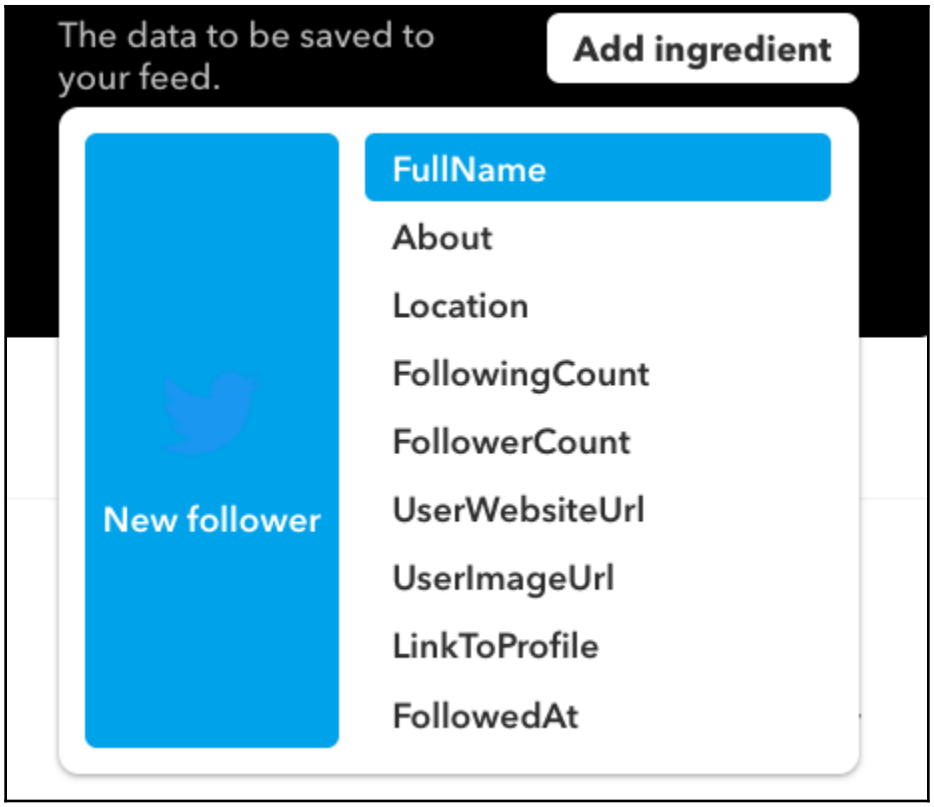
The data to be saved to your feed.
Add ingredient
New follower
FullName
About
Location
FollowingCount
FollowerCount
UserWebsiteUrl
UserImageUrl
LinkToProfile
FollowedAt

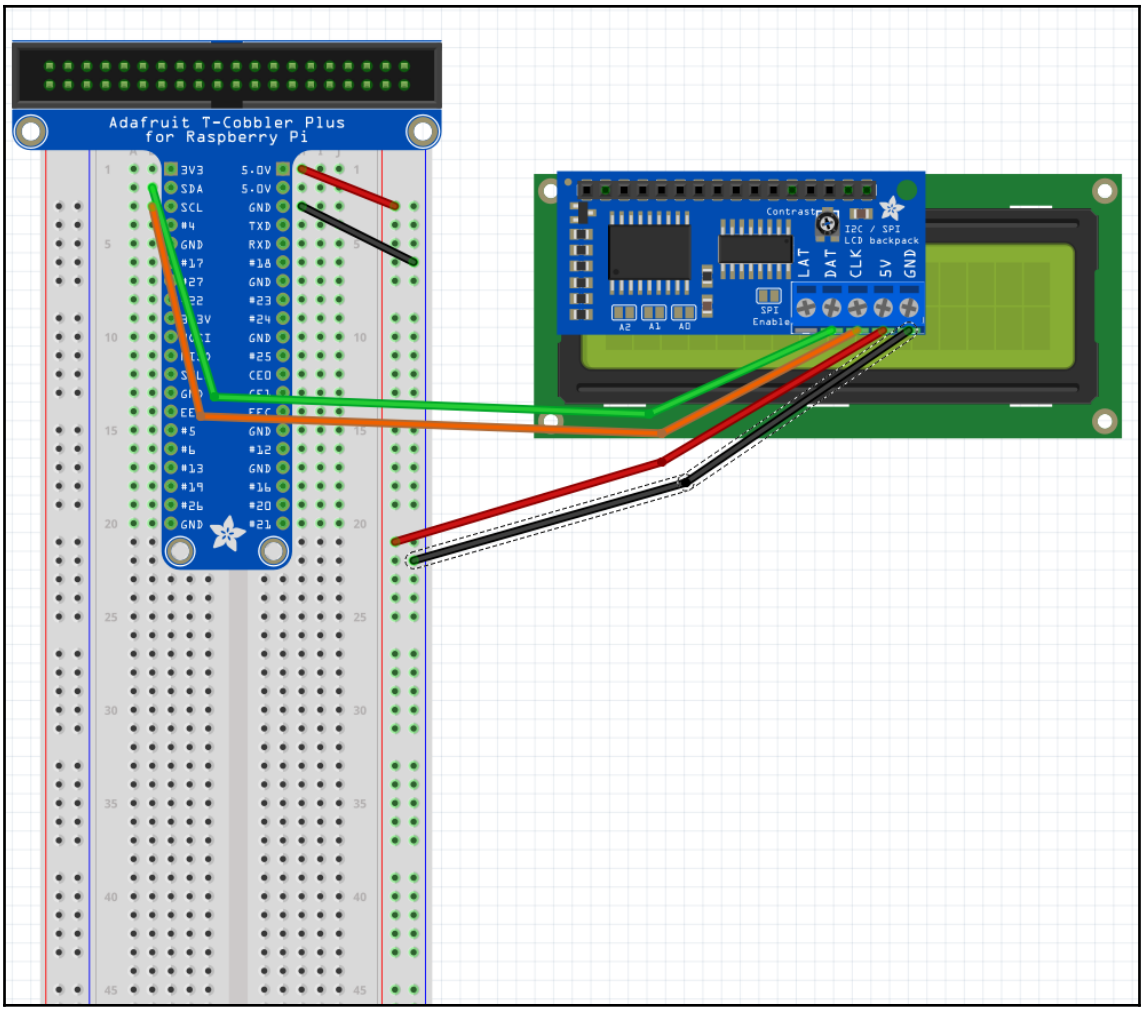

MQTT `nodebotanist/feeds/social-media-bot.twitter`

by

Key

Chapter 11: Building a NodeBots Swarm

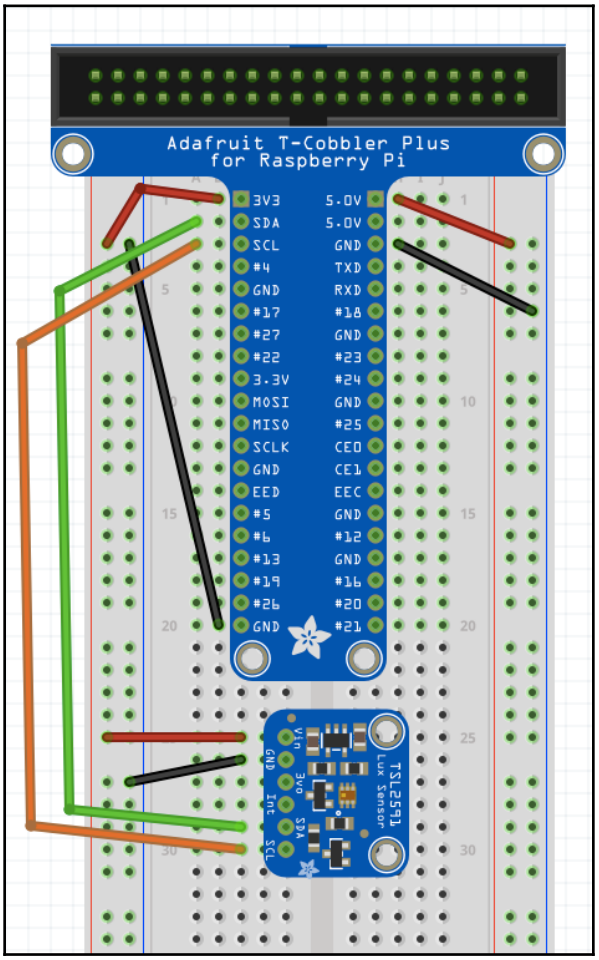

Johnny-Five has been tested with a variety of Arduino-compatible Boards. For non-Arduino based projects, platform-specific IO Plugins are available. IO Plugins allow Johnny-Five code to communicate with any hardware in whatever language that platform speaks!

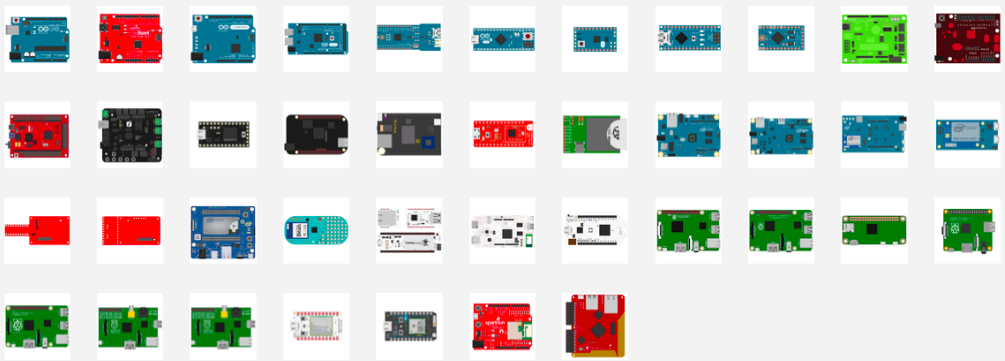

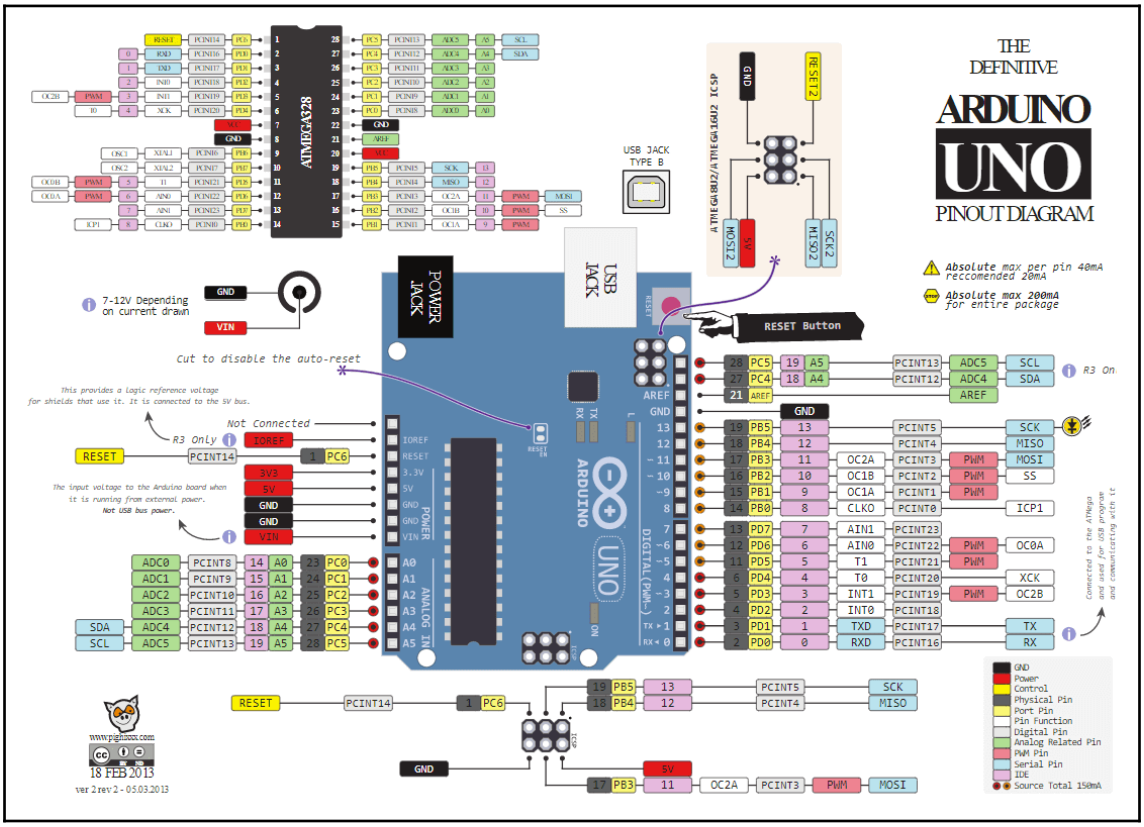

Arduino Uno

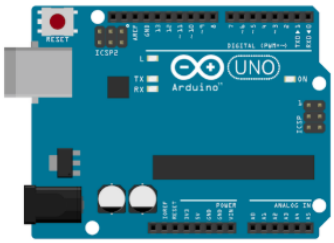

Environment

- Firmware/Runtime: StandardFirmataPlus (additional instructions)
- The JavaScript program is executed on a **host** machine that runs Node.js. The program transmits basic IO instructions to the board via **usb serial**, which acts as a **thin client**. Requires tethering.

Platform Specific

- Supports the `PING_READ` extension, when used with `PingFirmata`.
- Supports the `STEPPER_*` extensions when used with `AdvancedFirmata` or `ConfigurableFirmata`.

Analog Read	yes
Digital Read	yes
Digital Write	yes
PWM	yes
Servo	yes
I2C	yes
One Wire	yes
Stepper	yes
Serial/UART	yes
DAC	no
Ping	yes

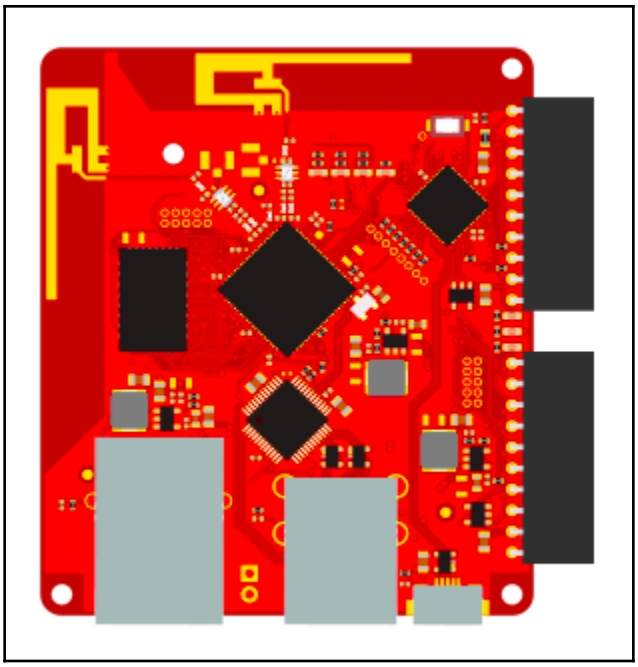

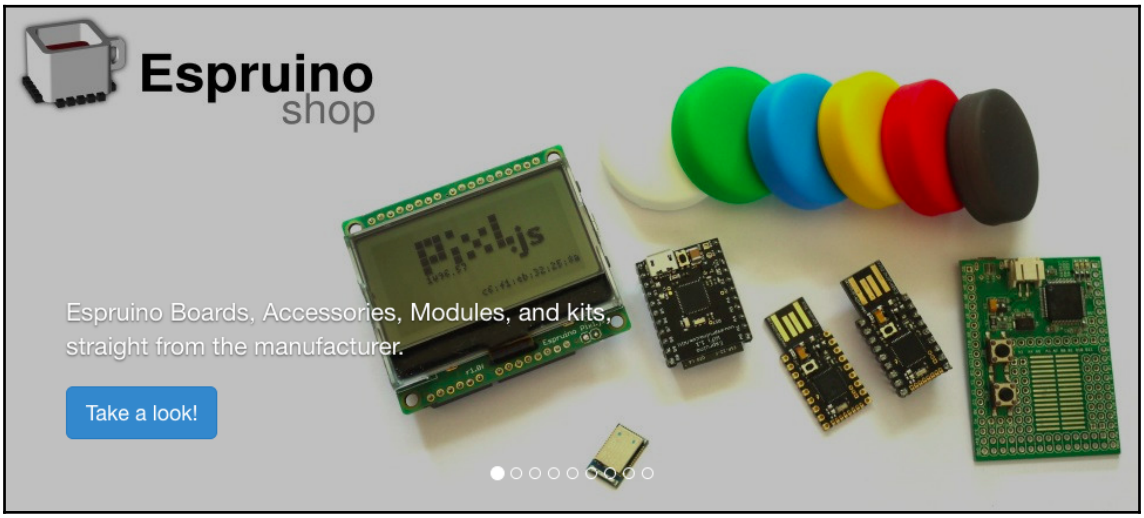
Espruino
shop
Espruino Boards, Accessories, Modules, and kits,
straight from the manufacturer.
Take a look!

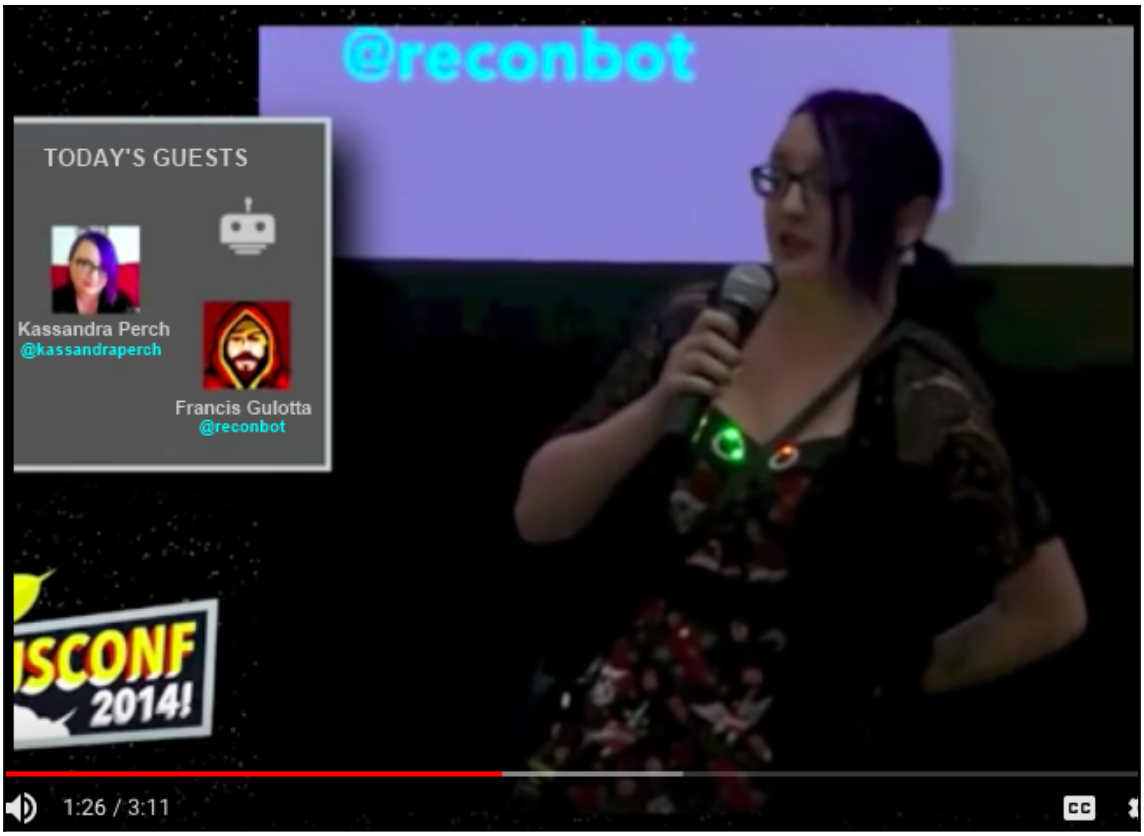
@reconbot
TODAY'S GUESTS
Kassandra Perch
@kassandraperch
Francis Gulotta
@reconbot
ISCONF
2014!
1:26 / 3:11
CC

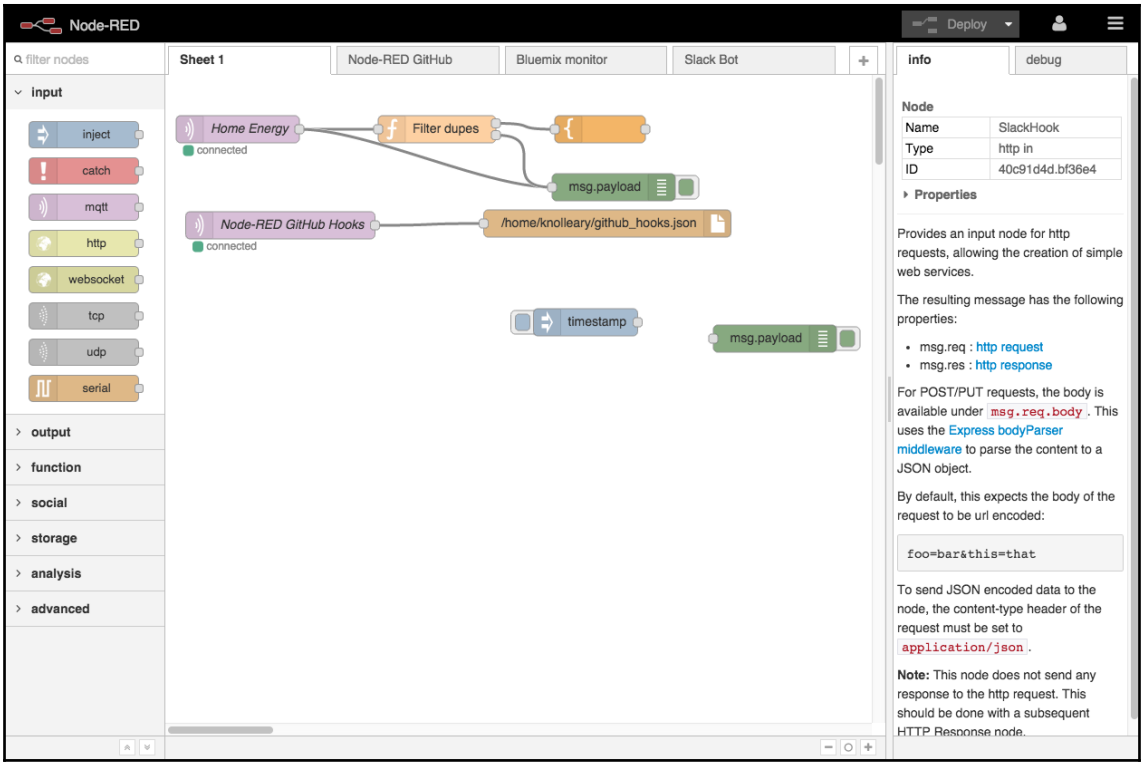
Node-RED
Deploy
filter nodes
Sheet 1
Node-RED GitHub
Bluemix monitor
Slack Bot
info
debug
input
inject
catch
mqtt
http
websocket
tcp
udp
serial
output
function
social
storage
analysis
advanced
Home Energy
connected
Filter dupes
msg.payload
Node-RED GitHub Hooks
connected
/home/knolleary/github_hooks.json
timestamp
msg.payload
Node
Name
SlackHook
Type
http in
ID
40c91d4d.bf36e4
Properties
Provides an input node for http requests, allowing the creation of simple web services.
The resulting message has the following properties:
msg.req : http request
msg.res : http response
For POST/PUT requests, the body is available under msg.req.body. This uses the Express bodyParser middleware to parse the content to a JSON object.
By default, this expects the body of the request to be url encoded:
foo=bar&this=that
To send JSON encoded data to the node, the content-type header of the request must be set to application/json.
Note: This node does not send any response to the http request. This should be done with a subsequent HTTP Response node.