Chapter 1

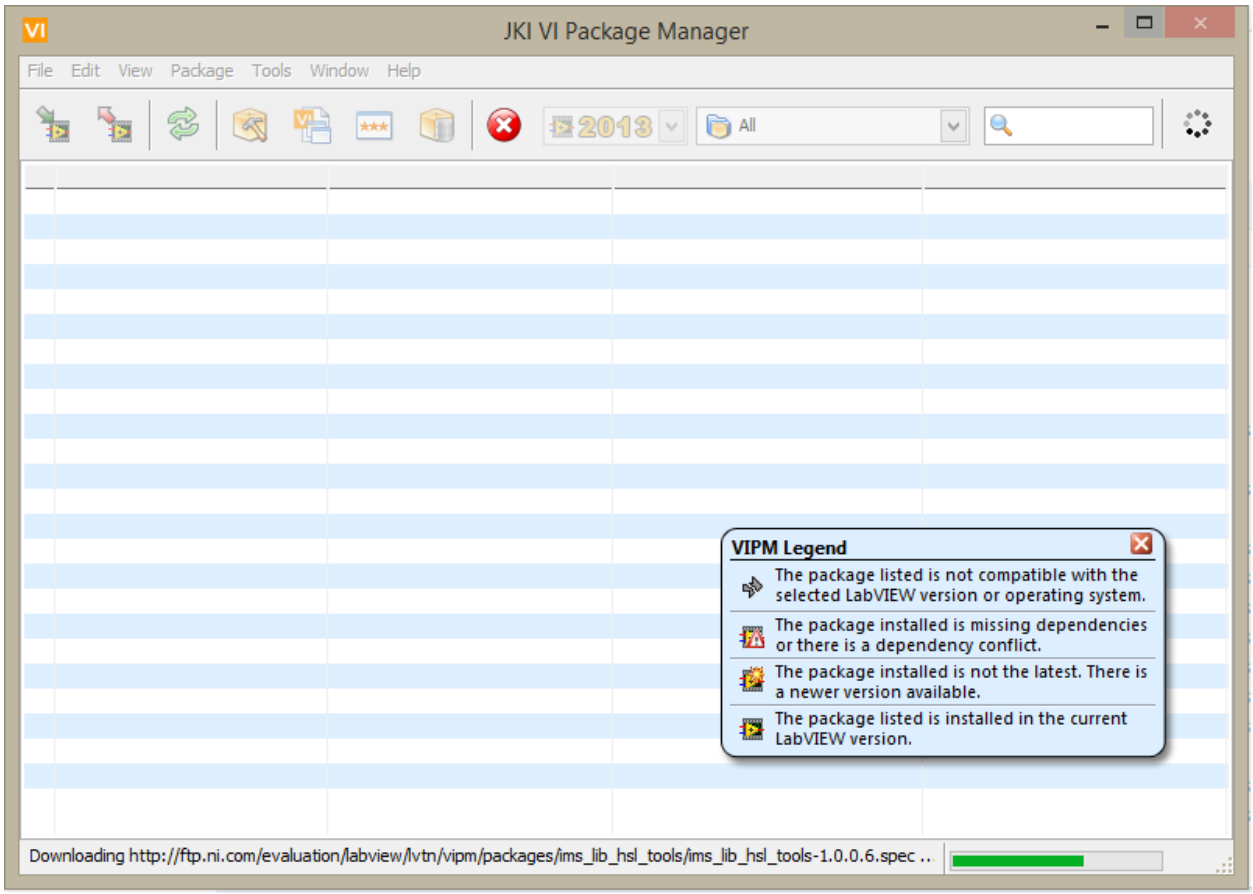
JKI VI Package Manager
File Edit View Package Tools Window Help
2013
All
VIPM Legend
The package listed is not compatible with the selected LabVIEW version or operating system.
The package installed is missing dependencies or there is a dependency conflict.
The package installed is not the latest. There is a newer version available.
The package listed is installed in the current LabVIEW version.
Downloading http://ftp.ni.com/evaluation/labview/lvtn/vipm/packages/ims_lib_hsl_tools/ims_lib_hsl_tools-1.0.0.6.spec ...

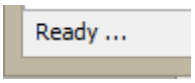
Ready ...

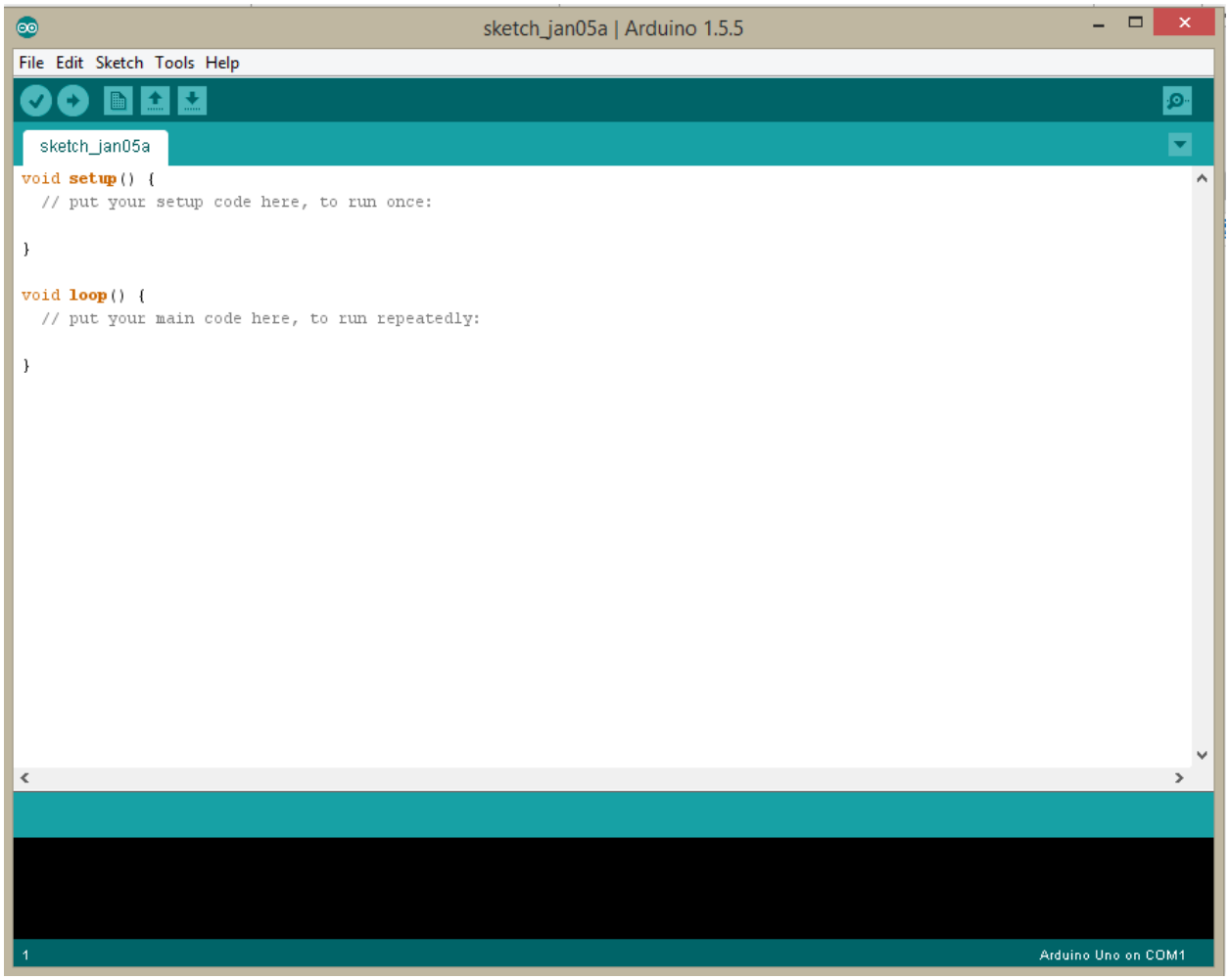
sketch_jan05a | Arduino 1.5.5
File Edit Sketch Tools Help
sketch_jan05a
void setup() {
// put your setup code here, to run once:
}
void loop() {
// put your main code here, to run repeatedly:
}
1
Arduino Uno on COM1

Chapter 2

LINX - LVH

Interface With Common Embedded Platforms

E-mail this Page | Print | PDF | Rich Text

[+] Enlarge Picture

- Interface with chipKIT, Arduino, and other embedded platforms
- Access peripherals such as DIO, AIO, PWM, SPI, and I2C from LabVIEW
- Take advantage of support for many common sensors
- Communicate over USB, serial, Ethernet, and wireless
- Easily deploy LINX code to NI myRIO and access I/O
- Quickly add a GUI to an embedded project

Download

2 Step Two: Download LINX - LVH

Download and install the toolkit after installing VIPM.

Download Toolkit

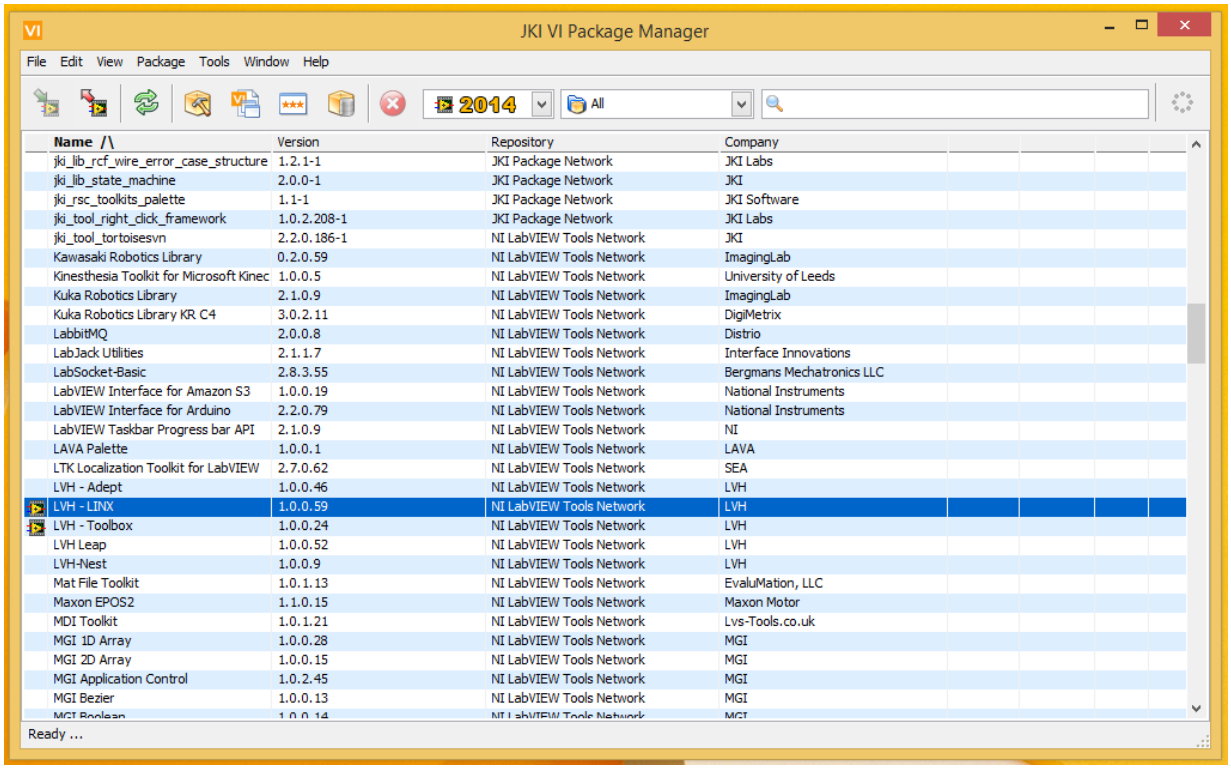
JKI VI Package Manager
File Edit View Package Tools Window Help
2014
All
Name /\ | Version | Repository | Company
jki_lib_rcf_wire_error_case_structure | 1.2.1-1 | JKI Package Network | JKI Labs
jki_lib_state_machine | 2.0.0-1 | JKI Package Network | JKI
jki_rsc_toolkits_palette | 1.1-1 | JKI Package Network | JKI Software
jki_tool_right_click_framework | 1.0.2.208-1 | JKI Package Network | JKI Labs
jki_tool_tortoisesvn | 2.2.0.186-1 | NI LabVIEW Tools Network | JKI
Kawasaki Robotics Library | 0.2.0.59 | NI LabVIEW Tools Network | ImagingLab
Kinesthesia Toolkit for Microsoft Kinec | 1.0.0.5 | NI LabVIEW Tools Network | University of Leeds
Kuka Robotics Library | 2.1.0.9 | NI LabVIEW Tools Network | ImagingLab
Kuka Robotics Library KR C4 | 3.0.2.11 | NI LabVIEW Tools Network | DigiMetrix
LabbitMQ | 2.0.0.8 | NI LabVIEW Tools Network | Distrio
LabJack Utilities | 2.1.1.7 | NI LabVIEW Tools Network | Interface Innovations
LabSocket-Basic | 2.8.3.55 | NI LabVIEW Tools Network | Bergmans Mechatronics LLC
LabVIEW Interface for Amazon S3 | 1.0.0.19 | NI LabVIEW Tools Network | National Instruments
LabVIEW Interface for Arduino | 2.2.0.79 | NI LabVIEW Tools Network | National Instruments
LabVIEW Taskbar Progress bar API | 2.1.0.9 | NI LabVIEW Tools Network | NI
LAVA Palette | 1.0.0.1 | NI LabVIEW Tools Network | LAVA
LTK Localization Toolkit for LabVIEW | 2.7.0.62 | NI LabVIEW Tools Network | SEA
LVH - Adept | 1.0.0.46 | NI LabVIEW Tools Network | LVH
LVH - LINX | 1.0.0.59 | NI LabVIEW Tools Network | LVH
LVH - Toolbox | 1.0.0.24 | NI LabVIEW Tools Network | LVH
LVH Leap | 1.0.0.52 | NI LabVIEW Tools Network | LVH
LVH-Nest | 1.0.0.9 | NI LabVIEW Tools Network | LVH
Mat File Toolkit | 1.0.1.13 | NI LabVIEW Tools Network | EvaluMation, LLC
Maxon EPOS2 | 1.1.0.15 | NI LabVIEW Tools Network | Maxon Motor
MDI Toolkit | 1.0.1.21 | NI LabVIEW Tools Network | Lvs-Tools.co.uk
MGI 1D Array | 1.0.0.28 | NI LabVIEW Tools Network | MGI
MGI 2D Array | 1.0.0.15 | NI LabVIEW Tools Network | MGI
MGI Application Control | 1.0.2.45 | NI LabVIEW Tools Network | MGI
MGI Bezier | 1.0.0.13 | NI LabVIEW Tools Network | MGI
Ready ...

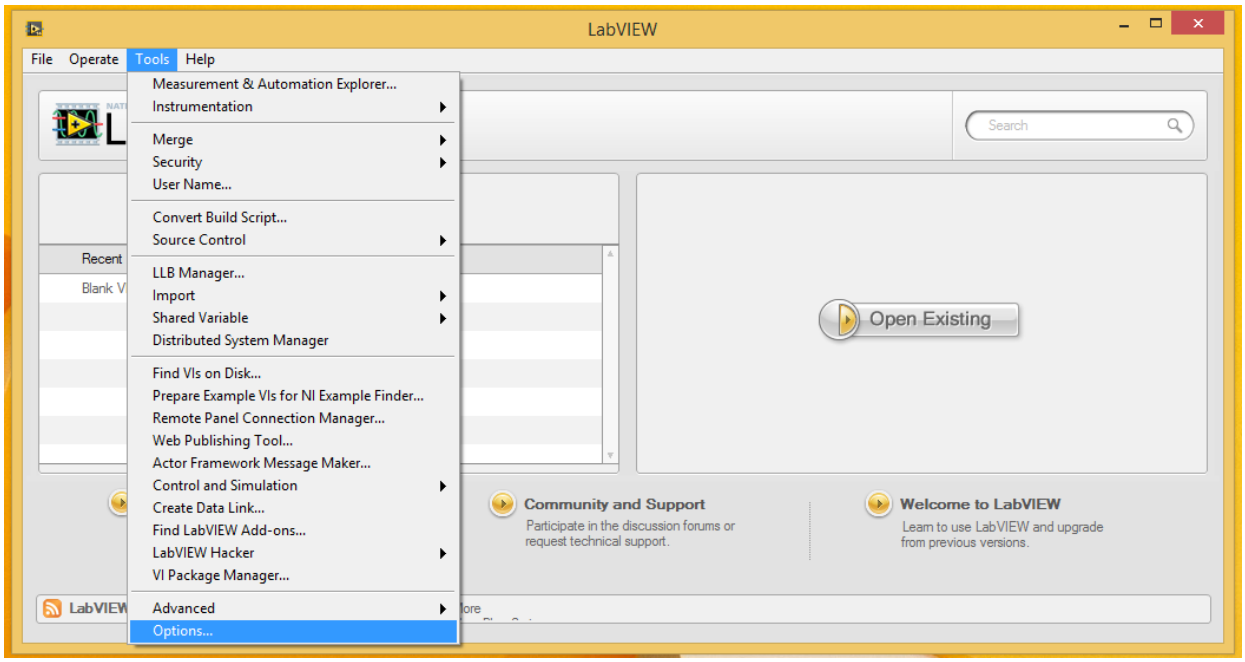
LabVIEW
File Operate Tools Help
Measurement & Automation Explorer...
Instrumentation
Merge
Security
User Name...
Convert Build Script...
Source Control
LLB Manager...
Import
Shared Variable
Distributed System Manager
Find VIs on Disk...
Prepare Example VIs for NI Example Finder...
Remote Panel Connection Manager...
Web Publishing Tool...
Actor Framework Message Maker...
Control and Simulation
Create Data Link...
Find LabVIEW Add-ons...
LabVIEW Hacker
VI Package Manager...
Advanced
Options...
Search
Recent
Open Existing
Community and Support
Participate in the discussion forums or request technical support.
Welcome to LabVIEW
Learn to use LabVIEW and upgrade from previous versions.

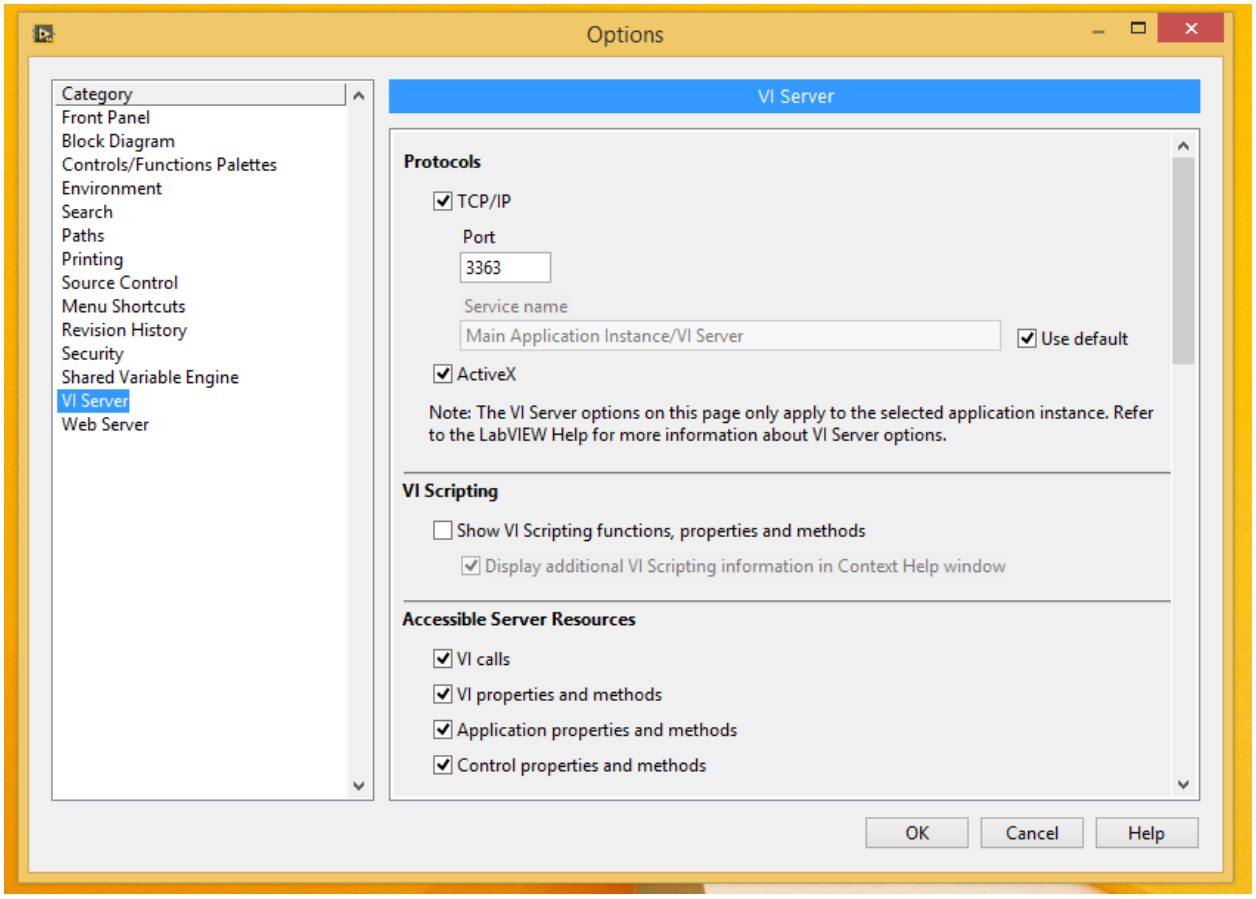
Options
Category
Front Panel
Block Diagram
Controls/Functions Palettes
Environment
Search
Paths
Printing
Source Control
Menu Shortcuts
Revision History
Security
Shared Variable Engine
VI Server
Web Server
VI Server
Protocols
TCP/IP
Port
3363
Service name
Main Application Instance/VI Server
Use default
ActiveX
Note: The VI Server options on this page only apply to the selected application instance. Refer to the LabVIEW Help for more information about VI Server options.
VI Scripting
Show VI Scripting functions, properties and methods
Display additional VI Scripting information in Context Help window
Accessible Server Resources
VI calls
VI properties and methods
Application properties and methods
Control properties and methods
OK
Cancel
Help

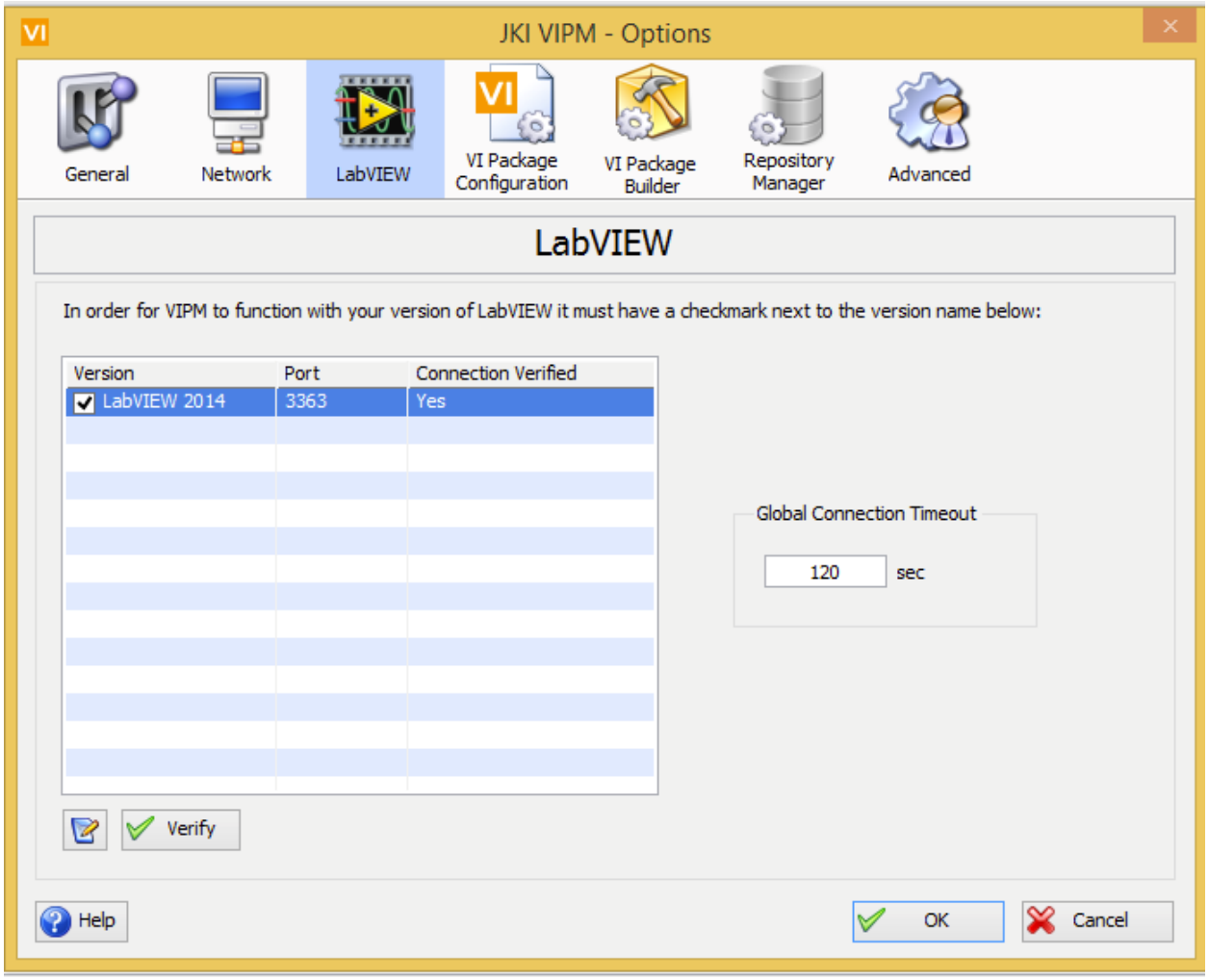
JKI VIPM - Options
General
Network
LabVIEW
VI Package Configuration
VI Package Builder
Repository Manager
Advanced
LabVIEW
In order for VIPM to function with your version of LabVIEW it must have a checkmark next to the version name below:
Version
Port
Connection Verified
LabVIEW 2014
3363
Yes
Global Connection Timeout
120
sec
Verify
Help
OK
Cancel

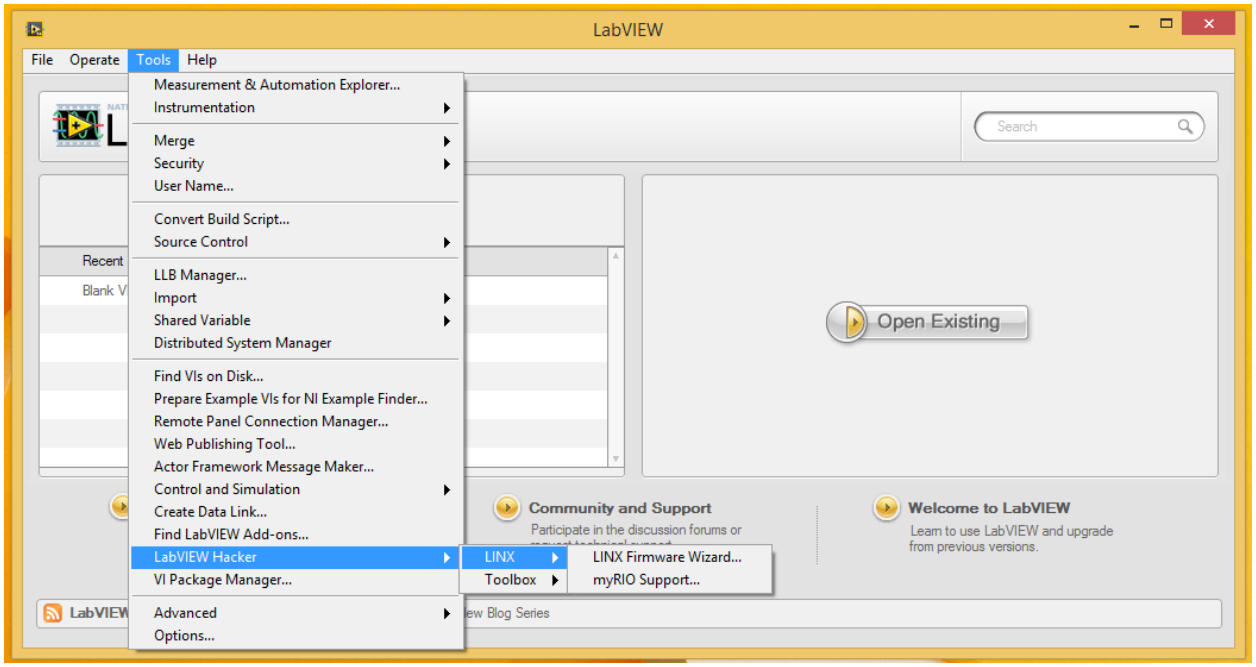
LabVIEW
File
Operate
Tools
Help
Measurement & Automation Explorer...
Instrumentation
Merge
Security
User Name...
Convert Build Script...
Source Control
LLB Manager...
Import
Shared Variable
Distributed System Manager
Find VIs on Disk...
Prepare Example VIs for NI Example Finder...
Remote Panel Connection Manager...
Web Publishing Tool...
Actor Framework Message Maker...
Control and Simulation
Create Data Link...
Find LabVIEW Add-ons...
LabVIEW Hacker
VI Package Manager...
Advanced
Options...
LINX
Toolbox
LINX Firmware Wizard...
myRIO Support...
Search
Recent
Open Existing
Community and Support
Welcome to LabVIEW
Learn to use LabVIEW and upgrade from previous versions.

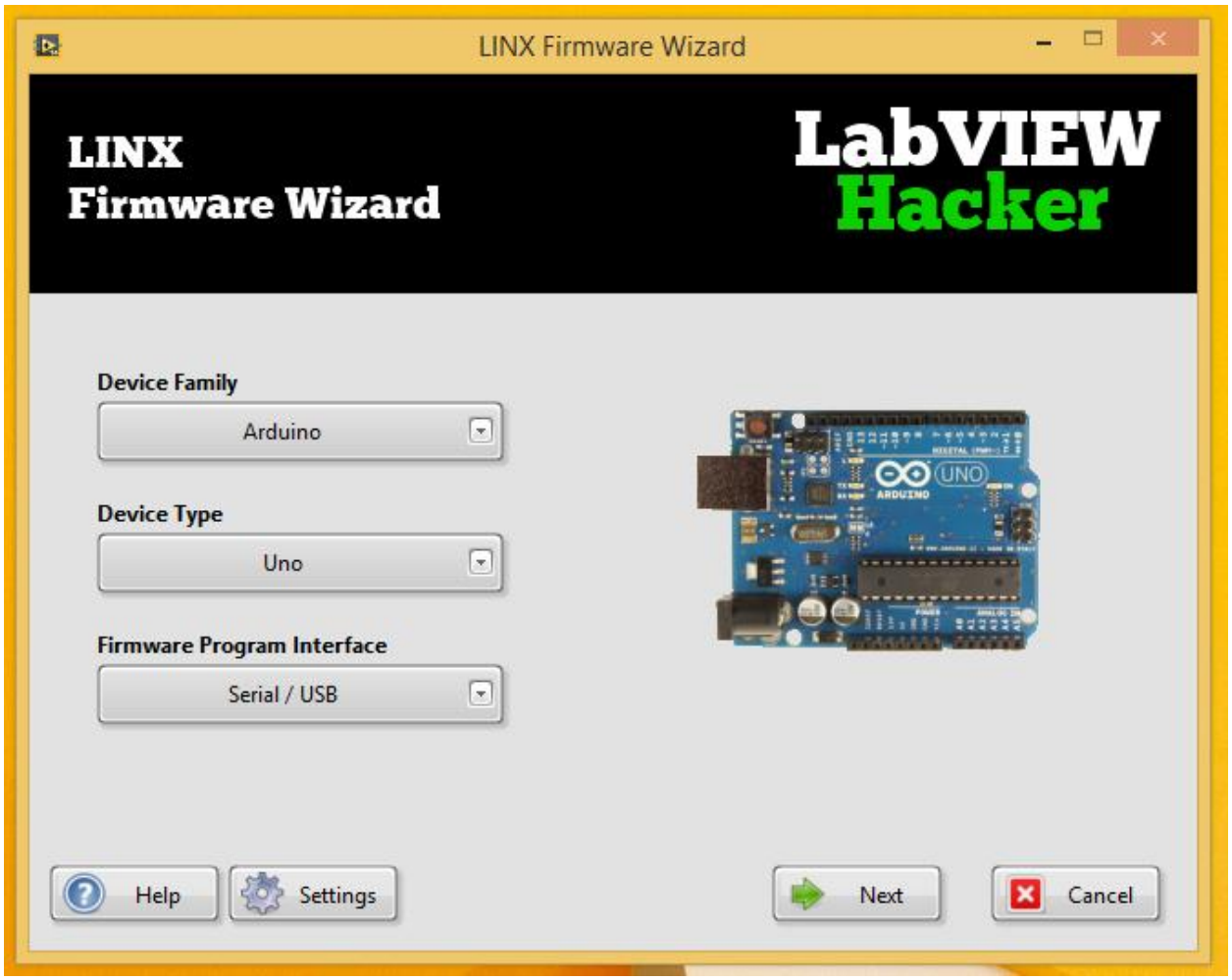
LINX Firmware Wizard
LINX
Firmware Wizard
LabVIEW
Hacker
Device Family
Arduino
Device Type
Uno
Firmware Program Interface
Serial / USB
Help
Settings
Next
Cancel

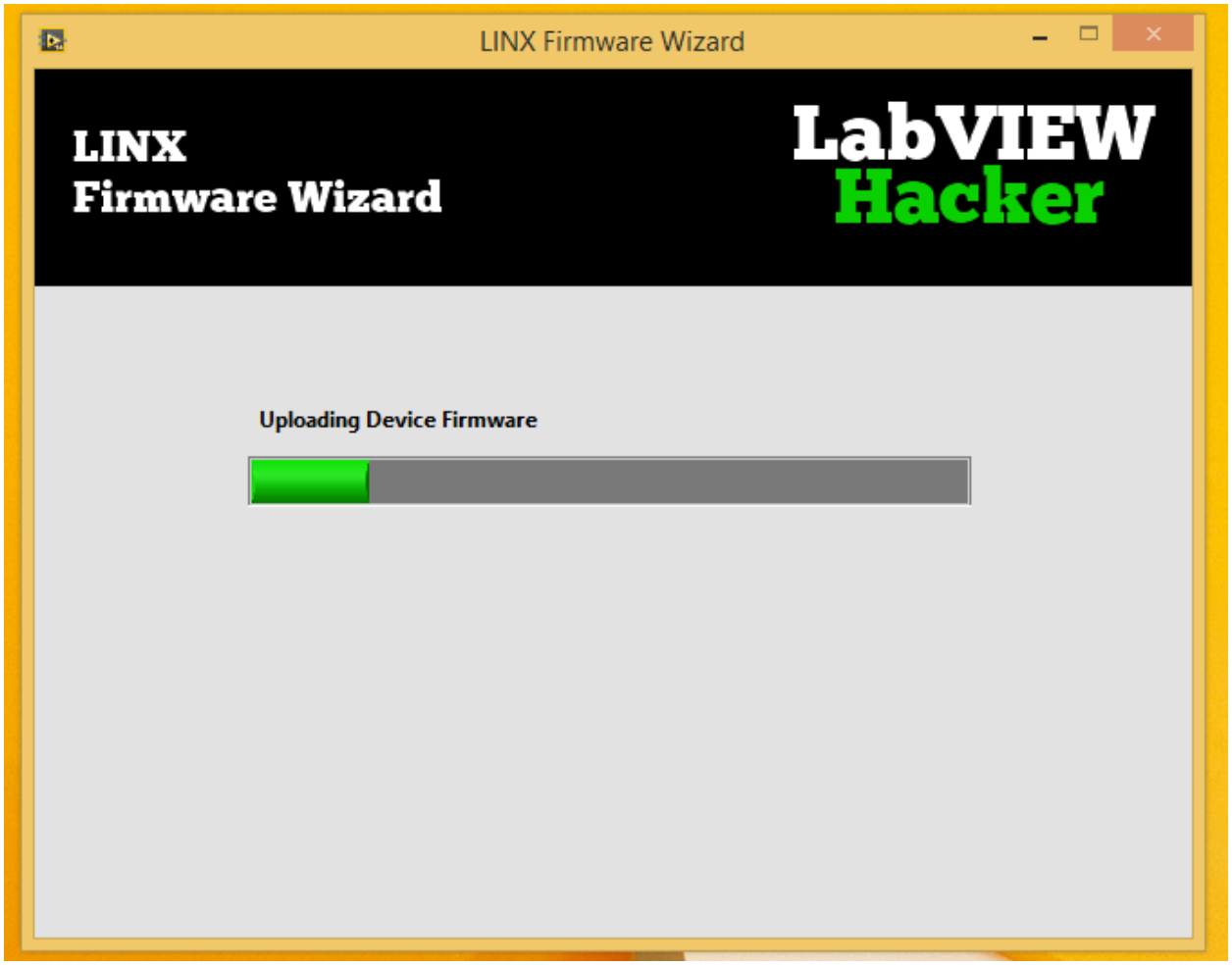
LINX Firmware Wizard
LINX
Firmware Wizard
LabVIEW
Hacker
Uploading Device Firmware

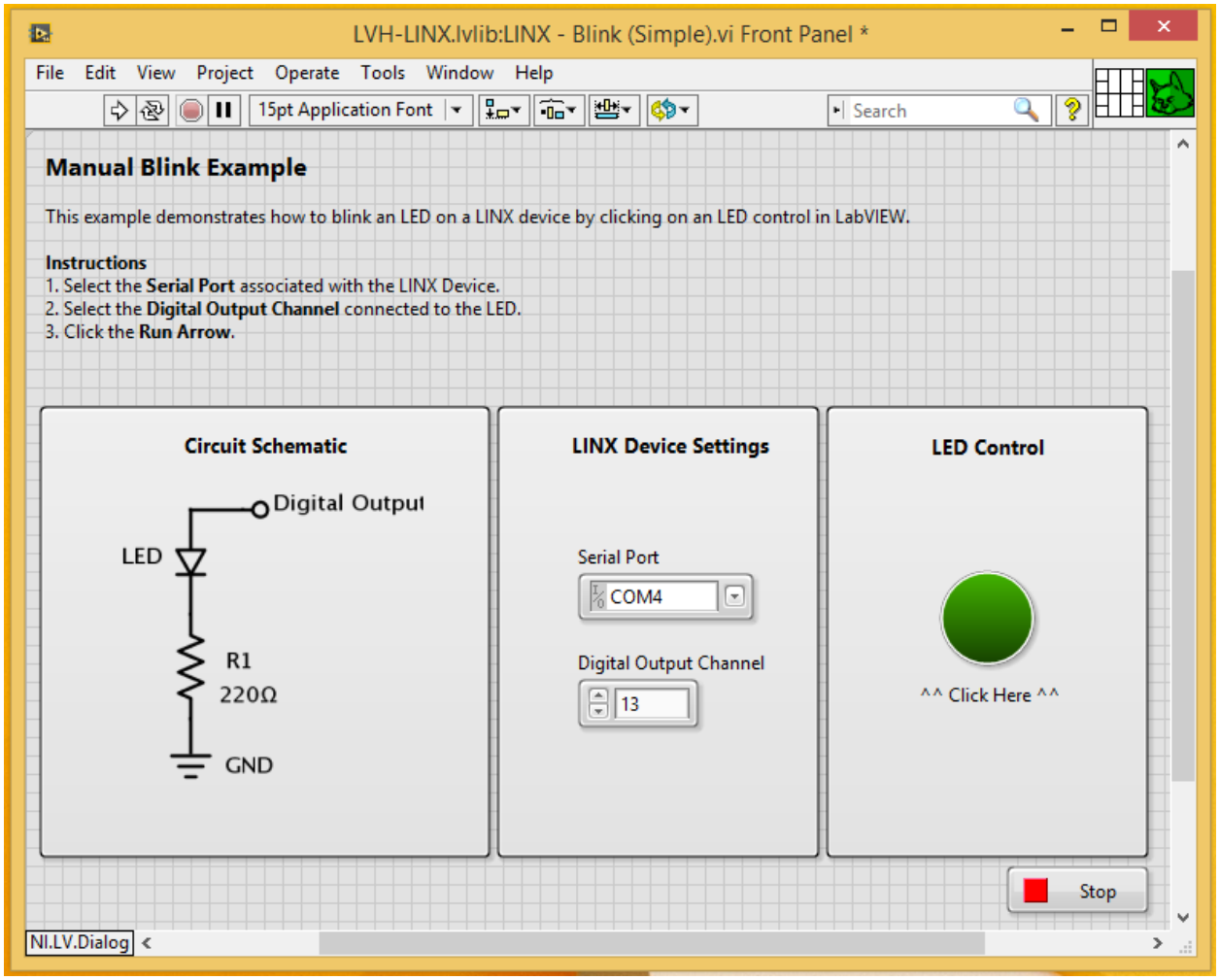
LVH-LINX.lvlib:LINX - Blink (Simple).vi Front Panel *
File Edit View Project Operate Tools Window Help
15pt Application Font
Search
Manual Blink Example
This example demonstrates how to blink an LED on a LINX device by clicking on an LED control in LabVIEW.
Instructions
1. Select the Serial Port associated with the LINX Device.
2. Select the Digital Output Channel connected to the LED.
3. Click the Run Arrow.
Circuit Schematic
Digital Output
LED
R1
220Ω
GND
LINX Device Settings
Serial Port
COM4
Digital Output Channel
13
LED Control
^^ Click Here ^^
Stop
NI.LV.Dialog

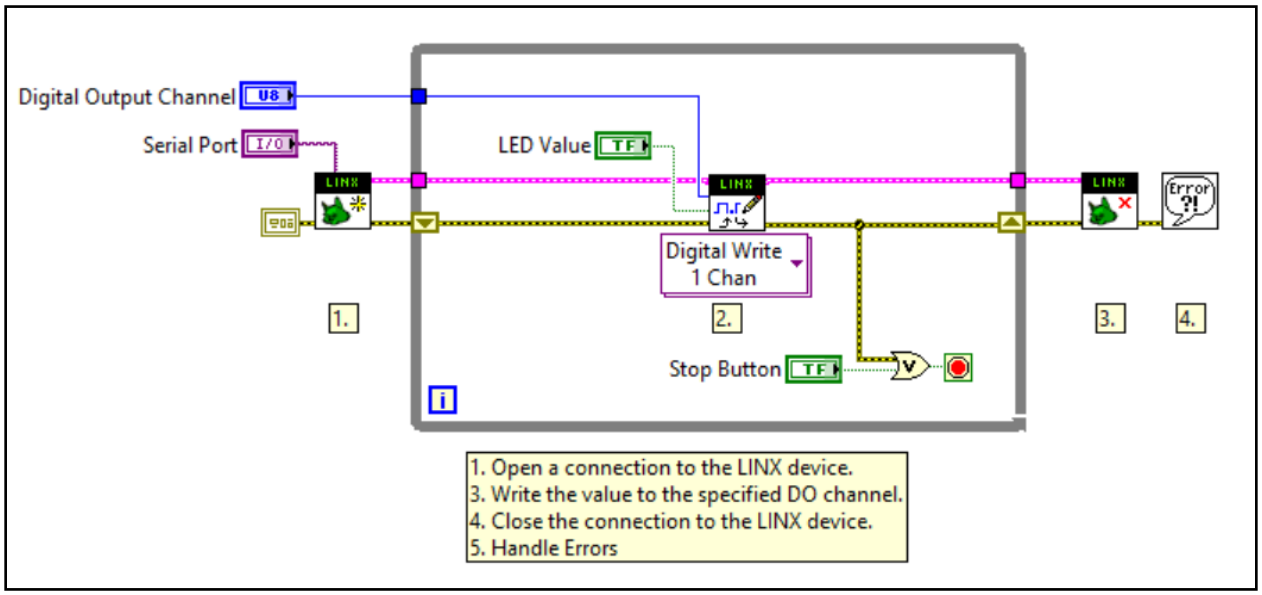
Digital Output Channel
U8
Serial Port
I/O
LED Value
TF
LINX
Digital Write
1 Chan
Stop Button
TF
1.
2.
3.
4.
Error ?!
1. Open a connection to the LINX device.
3. Write the value to the specified DO channel.
4. Close the connection to the LINX device.
5. Handle Errors

Chapter 3

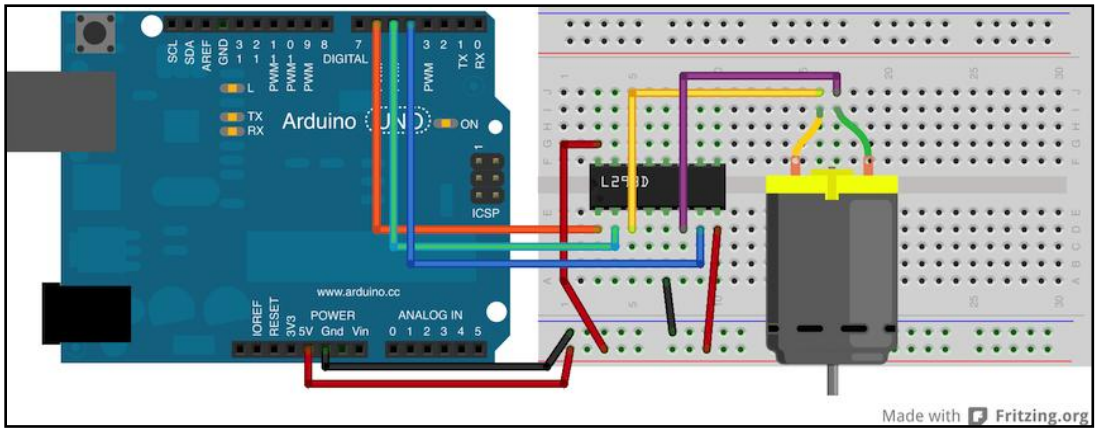
SCL
SDA
AREF
GND
DIGITAL
PWM
TX
RX
L
TX
RX
Arduino
ON
ICSP
www.arduino.cc
IOREF
RESET
3V3
POWER
5V Gnd Vin
ANALOG IN
0 1 2 3 4 5
Made with Fritzing.org

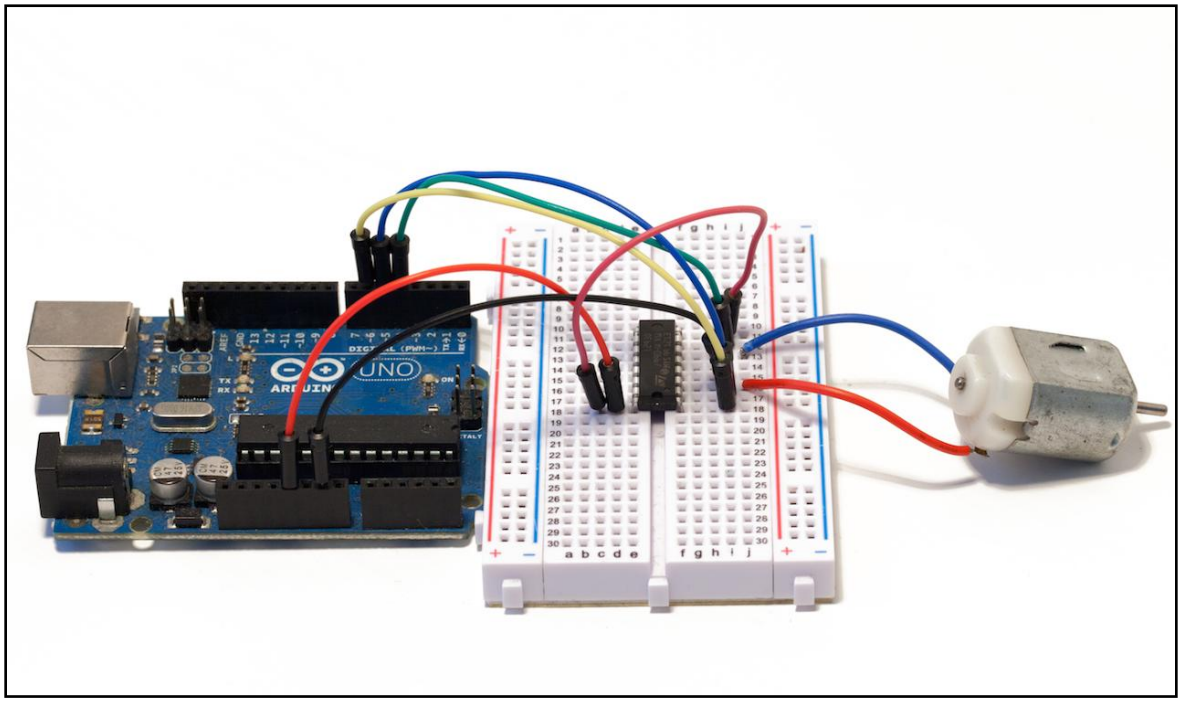

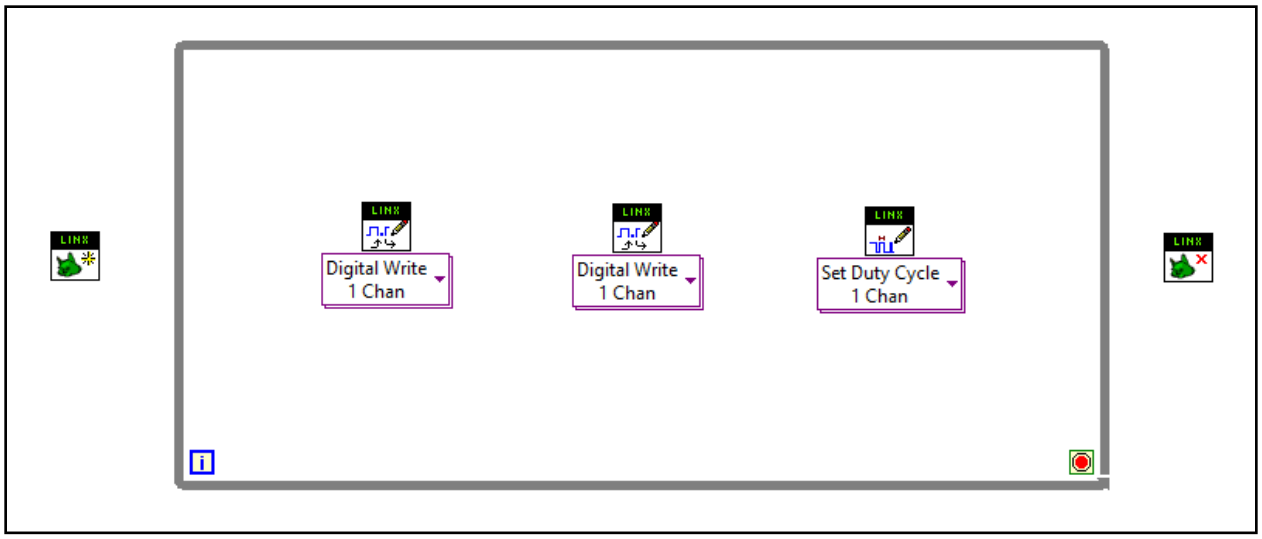
Digital Write
1 Chan
Digital Write
1 Chan
Set Duty Cycle
1 Chan

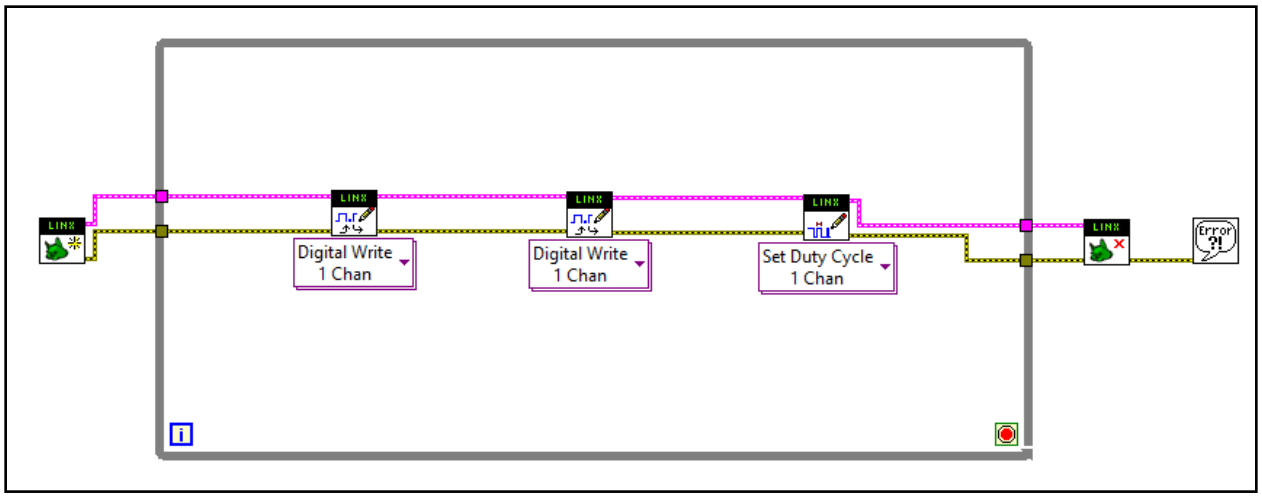
Digital Write
1 Chan
Digital Write
1 Chan
Set Duty Cycle
1 Chan
Error
?!

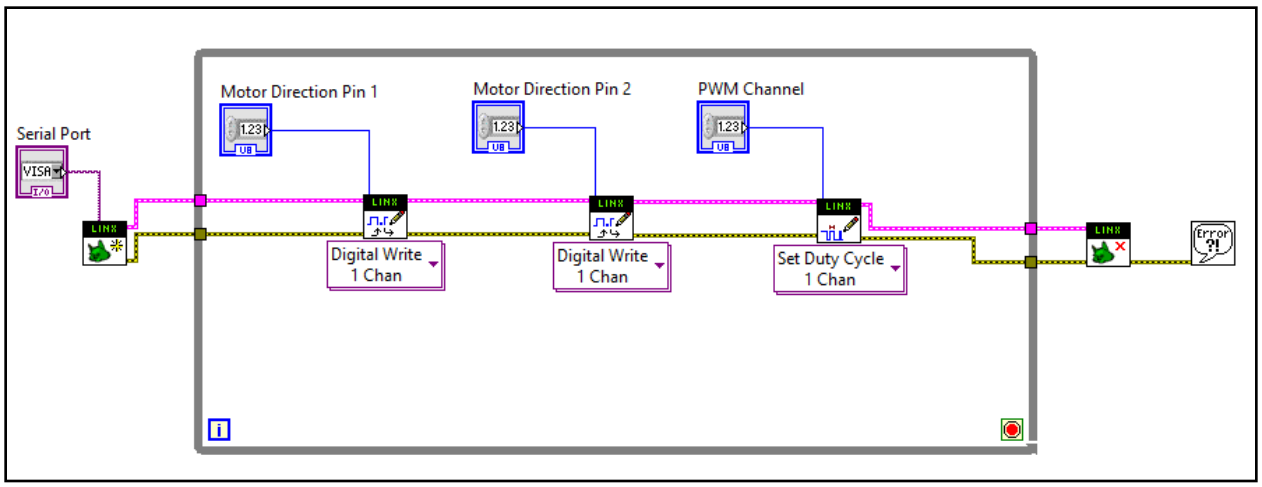
Serial Port
Motor Direction Pin 1
Motor Direction Pin 2
PWM Channel
Digital Write
1 Chan
Digital Write
1 Chan
Set Duty Cycle
1 Chan

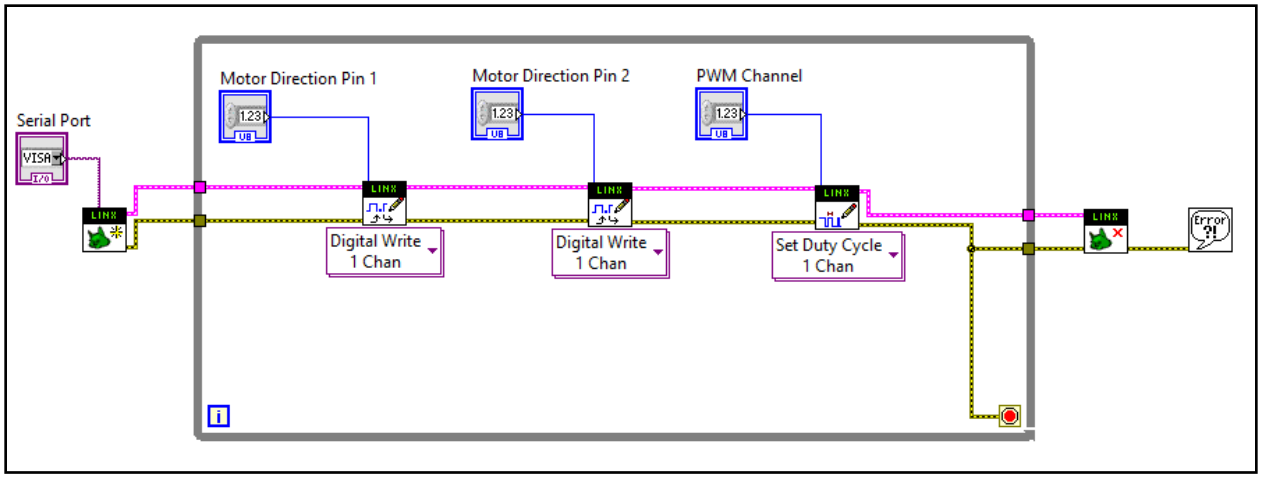
Serial Port
Motor Direction Pin 1
Motor Direction Pin 2
PWM Channel
Digital Write
1 Chan
Digital Write
1 Chan
Set Duty Cycle
1 Chan

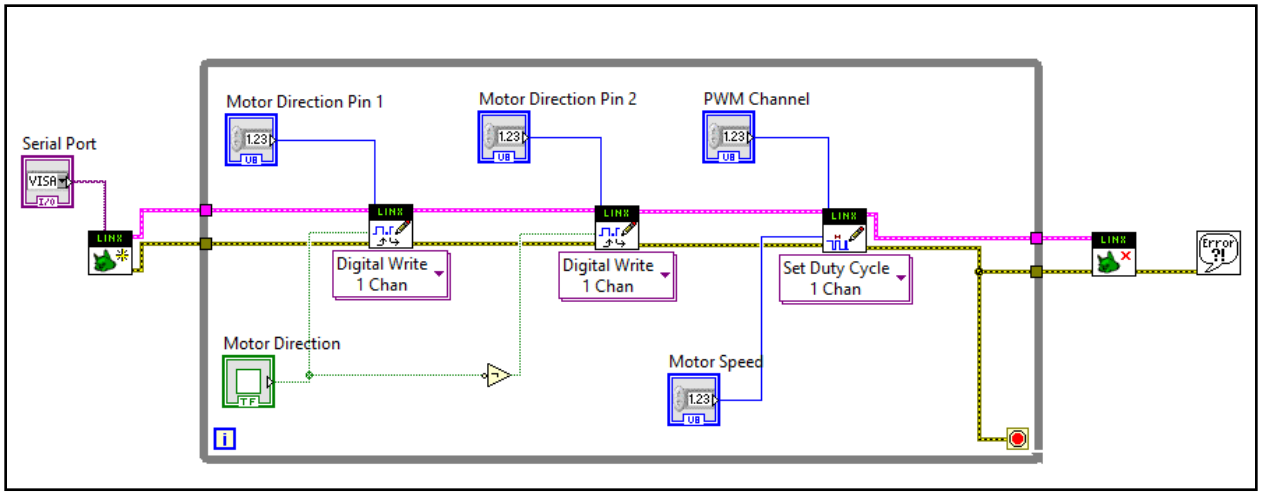
Serial Port
Motor Direction Pin 1
Motor Direction Pin 2
PWM Channel
Digital Write
1 Chan
Digital Write
1 Chan
Set Duty Cycle
1 Chan
Motor Direction
Motor Speed

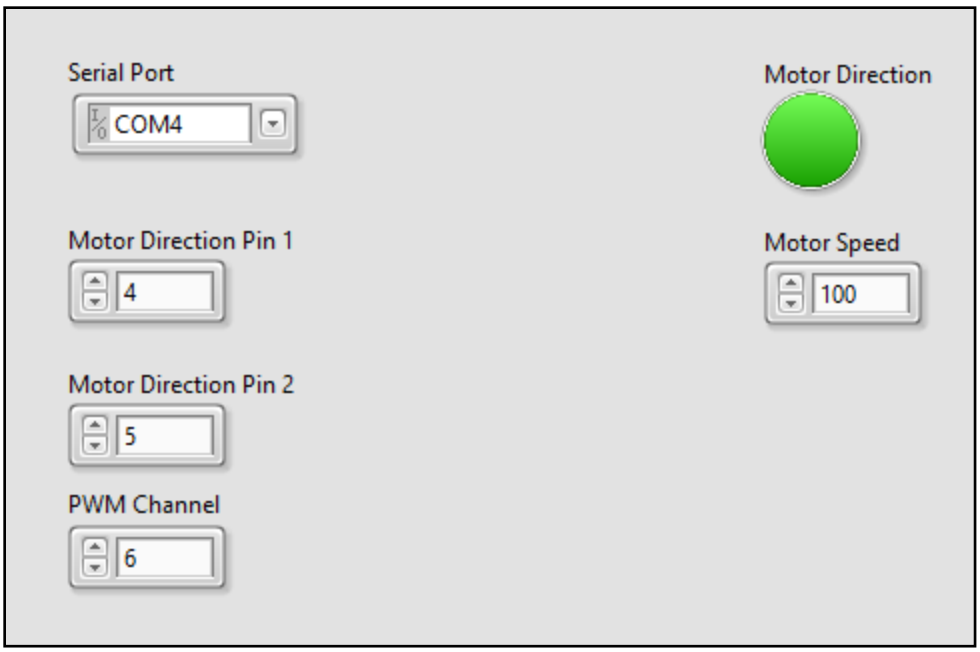
Serial Port
COM4
Motor Direction
Motor Direction Pin 1
4
Motor Speed
100
Motor Direction Pin 2
5
PWM Channel
6

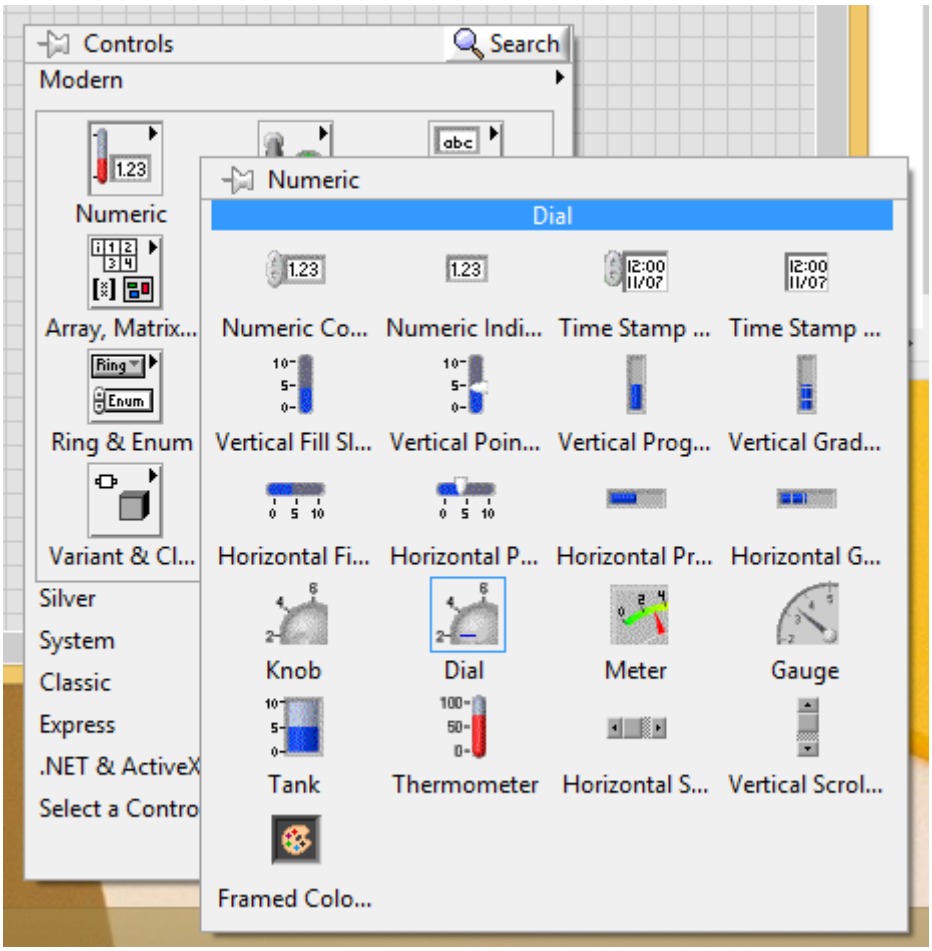
Controls
Search
Modern
Numeric
Array, Matrix...
Ring & Enum
Variant & Cl...
Silver
System
Classic
Express
.NET & ActiveX
Select a Contro
Numeric
Dial
Numeric Co...
Numeric Indi...
Time Stamp ...
Time Stamp ...
Vertical Fill Sl...
Vertical Poin...
Vertical Prog...
Vertical Grad...
Horizontal Fi...
Horizontal P...
Horizontal Pr...
Horizontal G...
Knob
Dial
Meter
Gauge
Tank
Thermometer
Horizontal S...
Vertical Scrol...
Framed Colo...

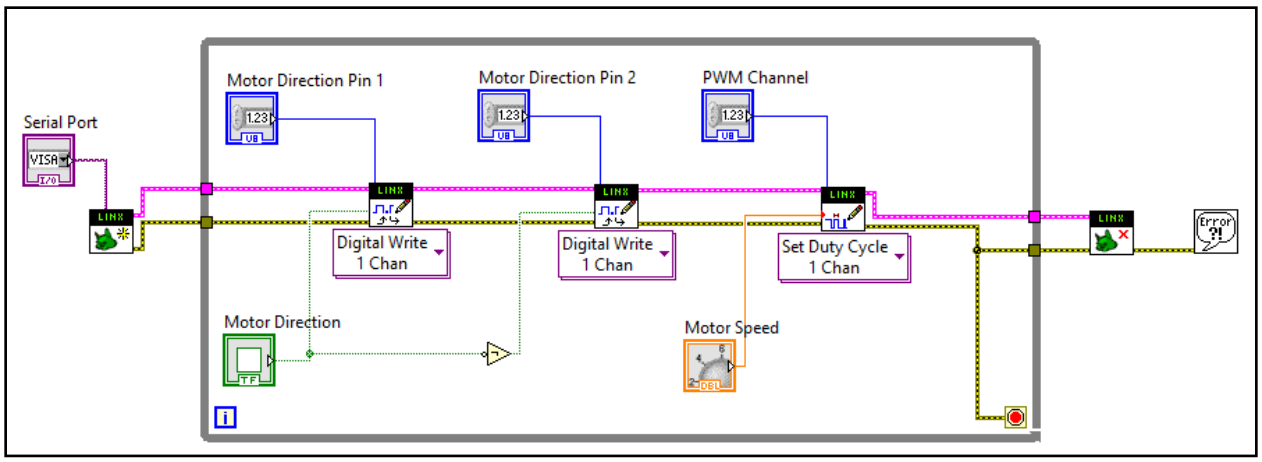
Serial Port
Motor Direction Pin 1
Motor Direction Pin 2
PWM Channel
Digital Write
1 Chan
Digital Write
1 Chan
Set Duty Cycle
1 Chan
Motor Direction
Motor Speed
Error
?!

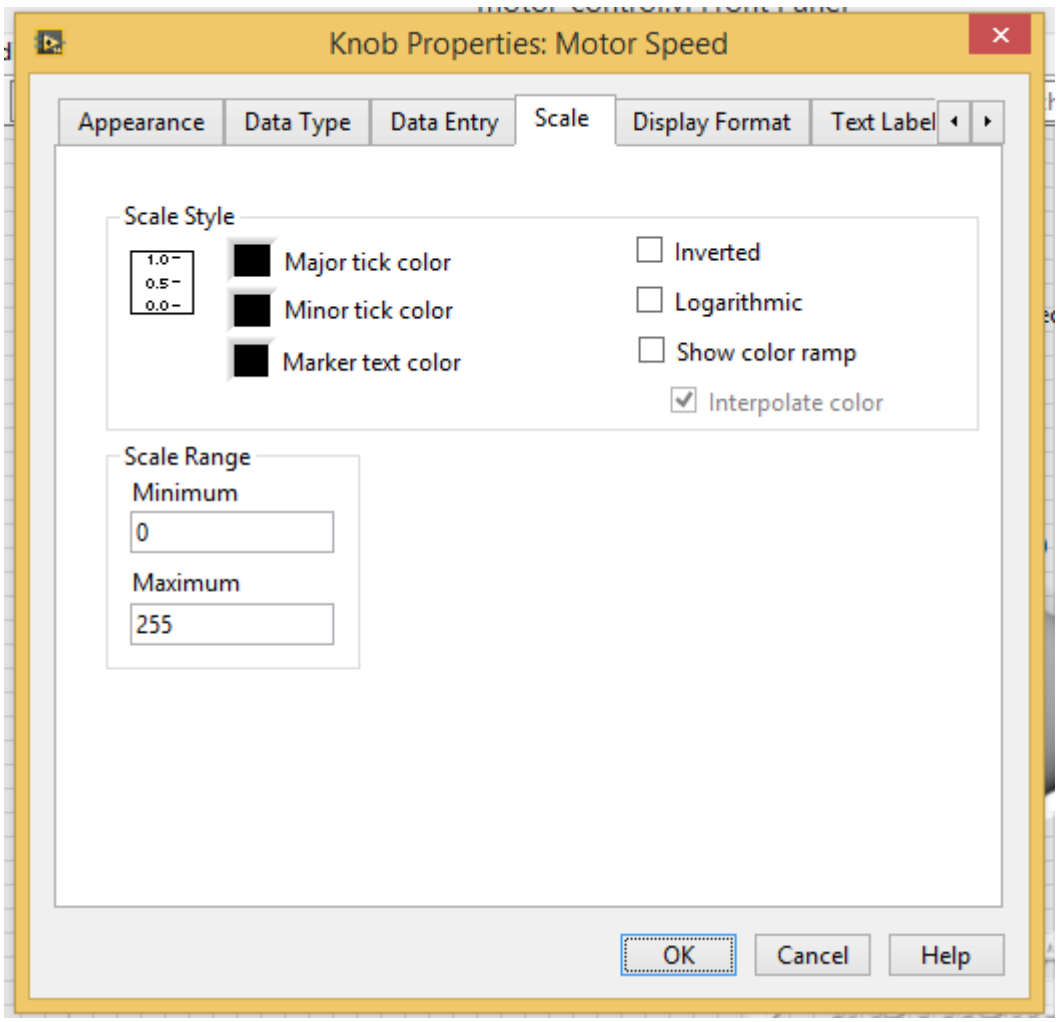
Knob Properties: Motor Speed
Appearance
Data Type
Data Entry
Scale
Display Format
Text Label
Scale Style
Major tick color
Minor tick color
Marker text color
Inverted
Logarithmic
Show color ramp
Interpolate color
Scale Range
Minimum
0
Maximum
255
OK
Cancel
Help

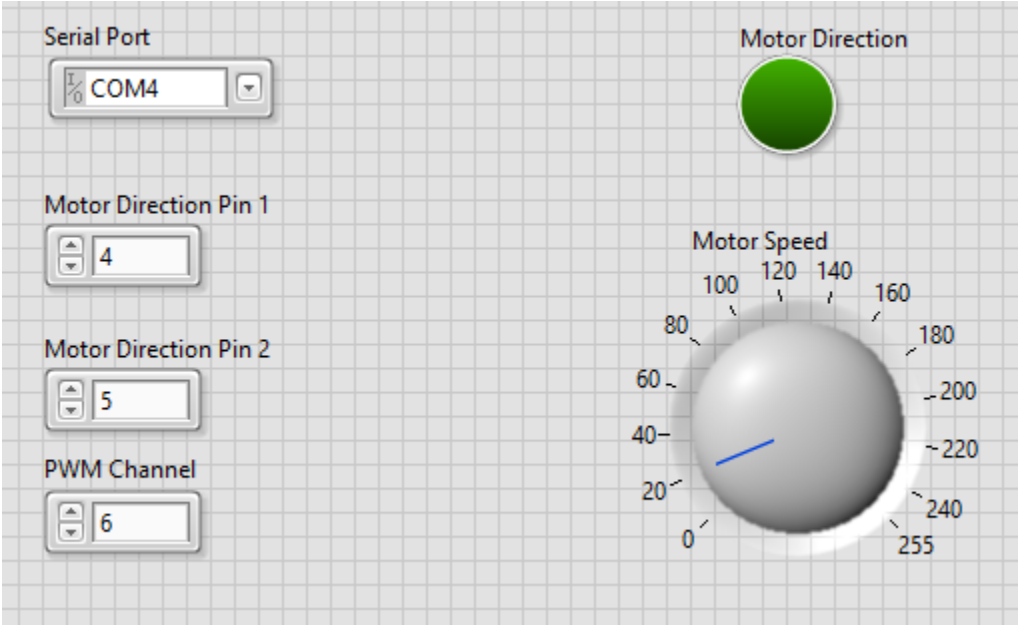
Serial Port
COM4
Motor Direction
Motor Direction Pin 1
4
Motor Direction Pin 2
5
PWM Channel
6
Motor Speed
0
20
40
60
80
100
120
140
160
180
200
220
240
255

Chapter 4

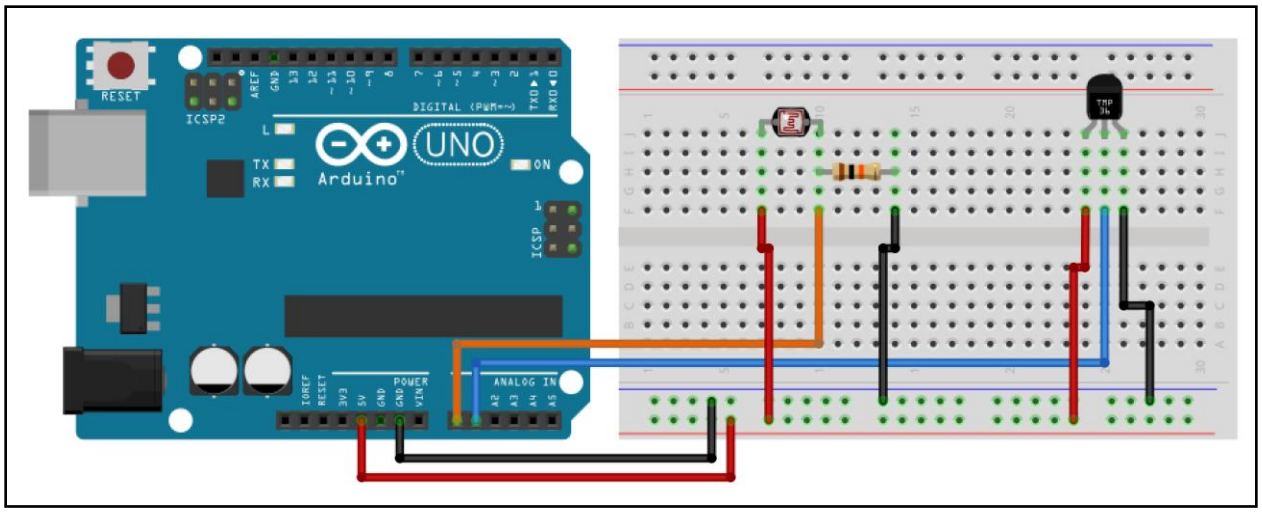
RESET
ICSP2
UNO
Arduino
ICSP
POWER
ANALOG IN

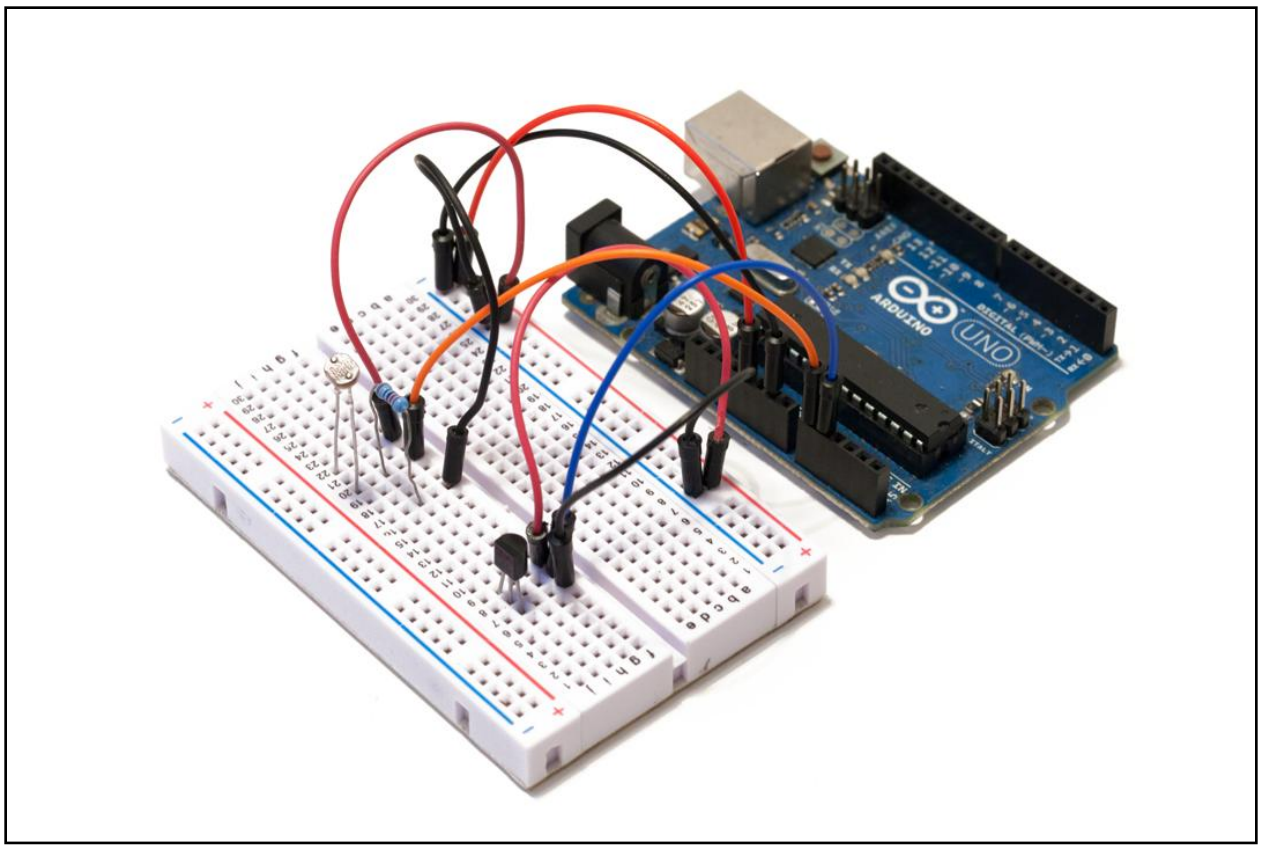

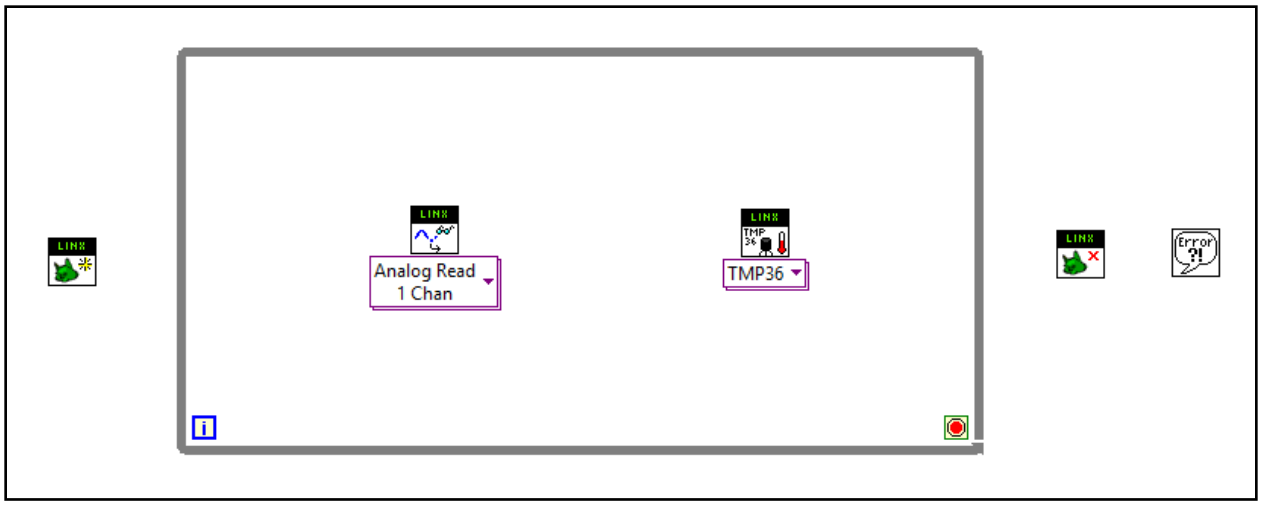
LINX
Analog Read
1 Chan
LINX
TMP
36
TMP36
LINX
Error
?!

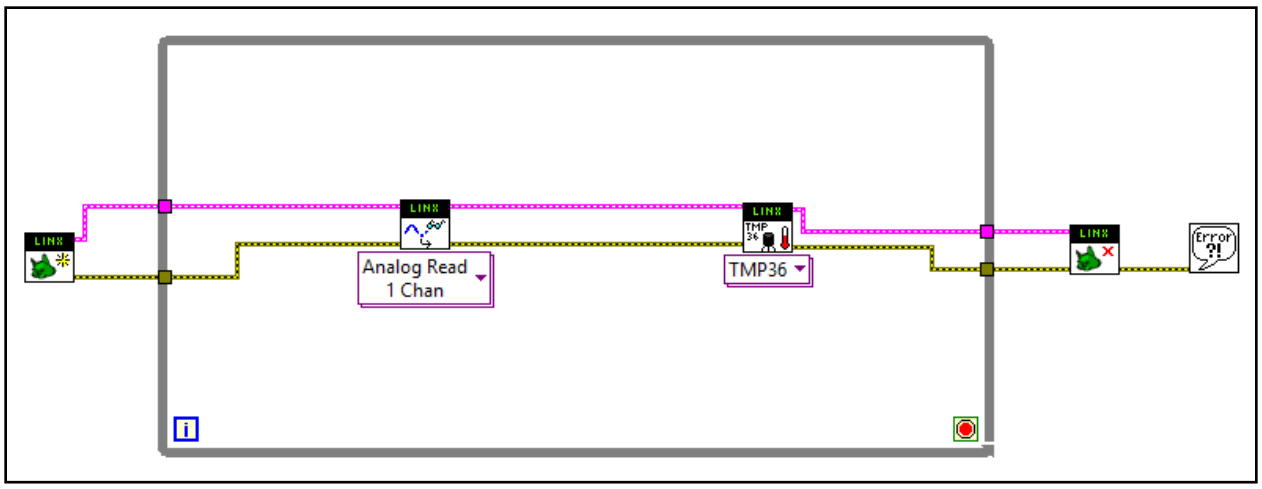
Analog Read
1 Chan
TMP36

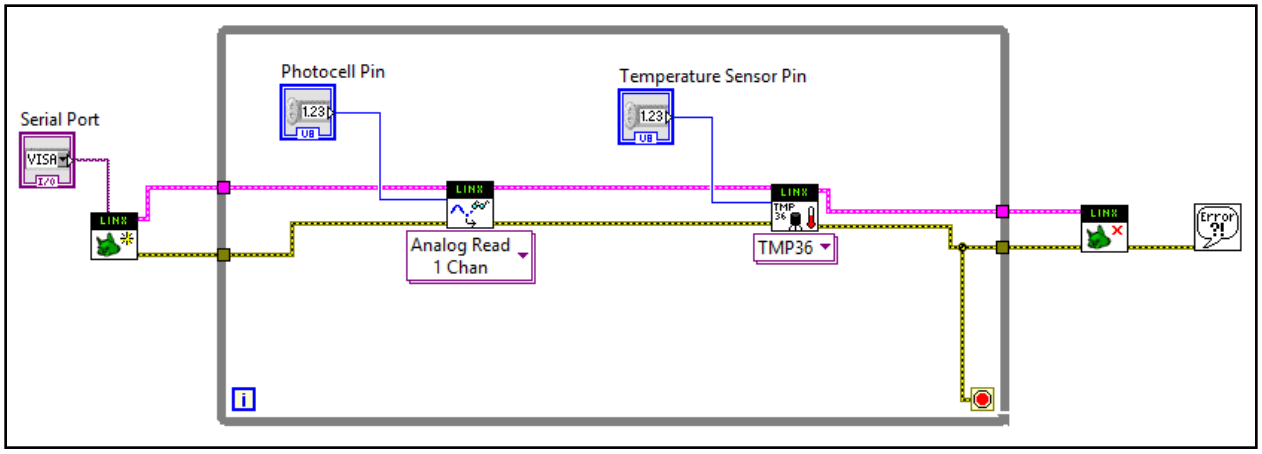
Serial Port
Photocell Pin
Temperature Sensor Pin
Analog Read
1 Chan
TMP36

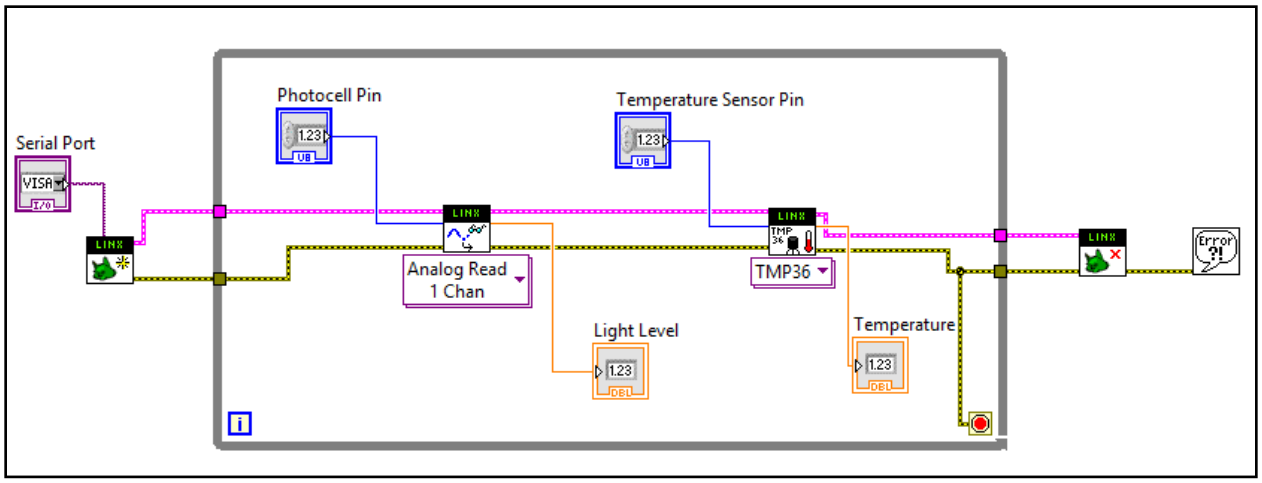
Serial Port
Photocell Pin
Temperature Sensor Pin
Analog Read
1 Chan
TMP36
Light Level
Temperature

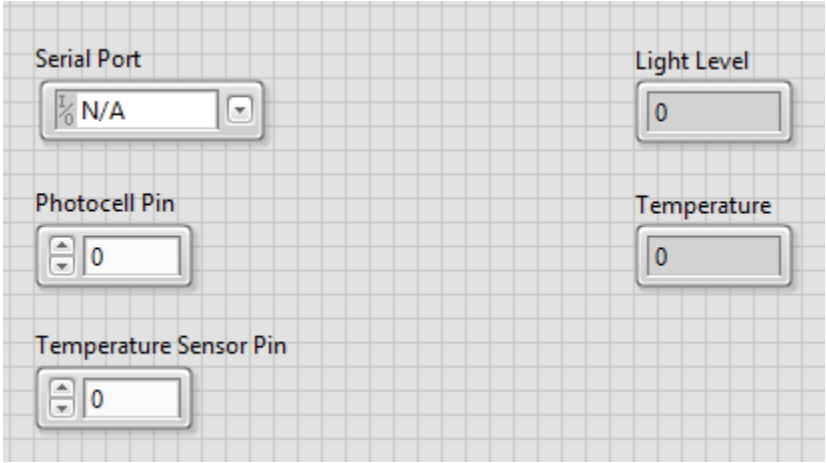
Serial Port
N/A
Light Level
0
Photocell Pin
0
Temperature
0
Temperature Sensor Pin
0

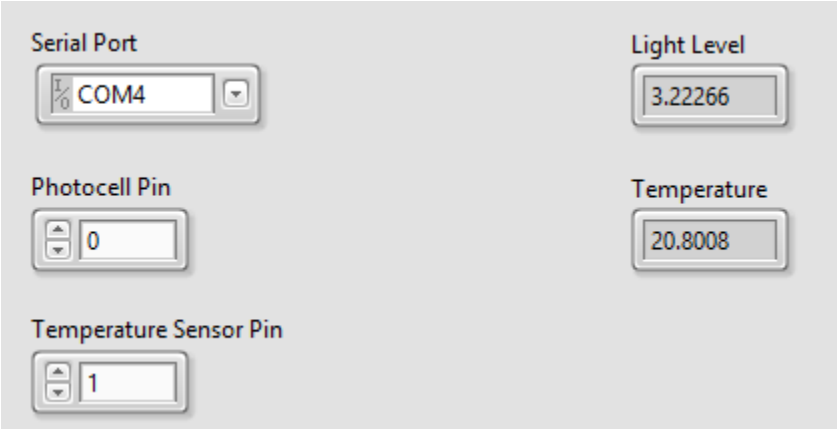
Serial Port
COM4
Light Level
3.22266
Photocell Pin
0
Temperature
20.8008
Temperature Sensor Pin
1

Serial Port
COM4
Temperature
100
80
60
40
20
0
Photocell Pin
0
Light Level
Temperature Sensor Pin
1

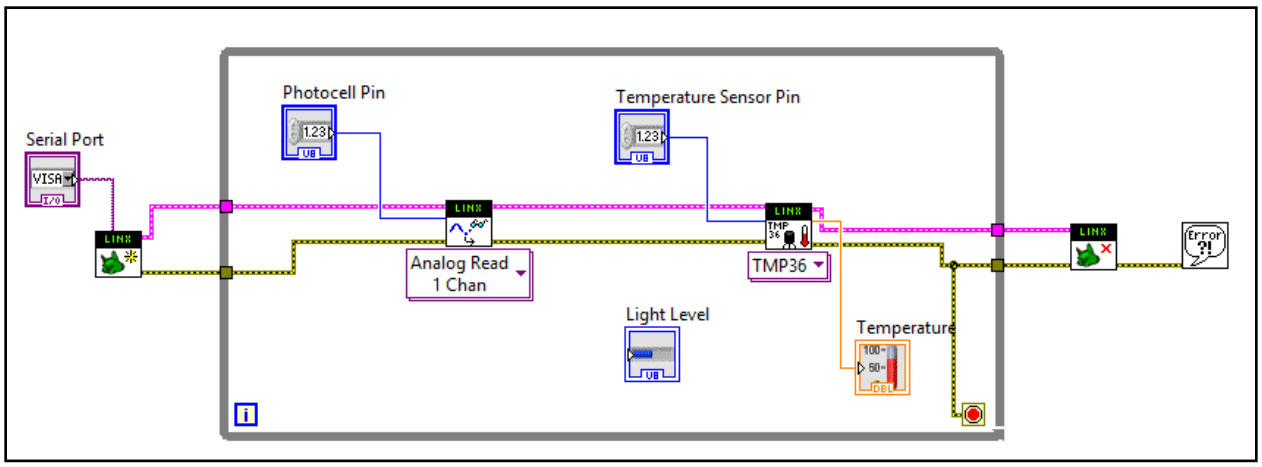
Serial Port
Photocell Pin
Temperature Sensor Pin
Analog Read
1 Chan
TMP36
Light Level
Temperature

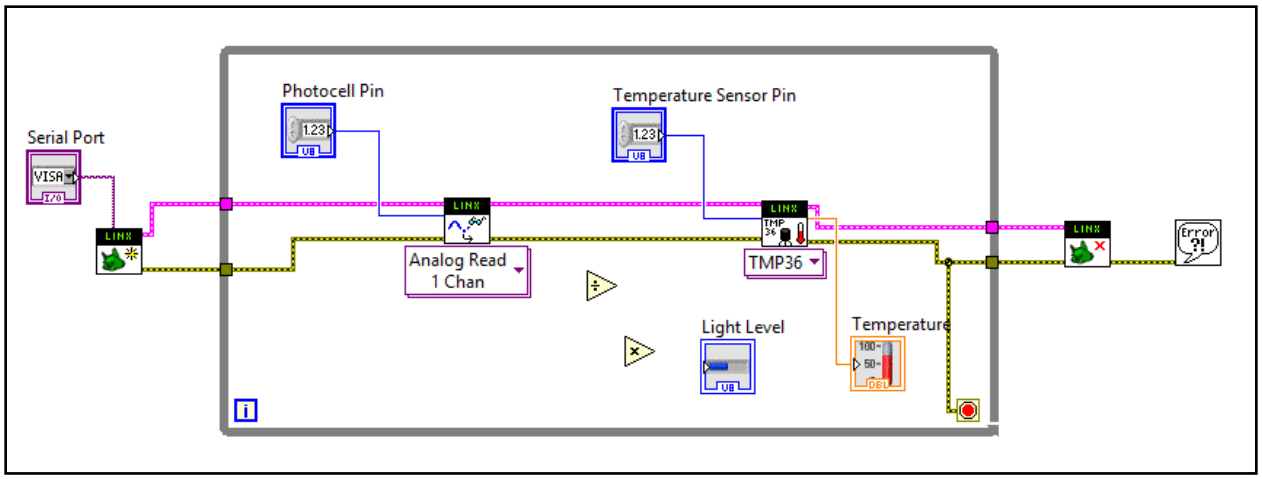
Serial Port
Photocell Pin
Temperature Sensor Pin
Analog Read
1 Chan
TMP36
Light Level
Temperature

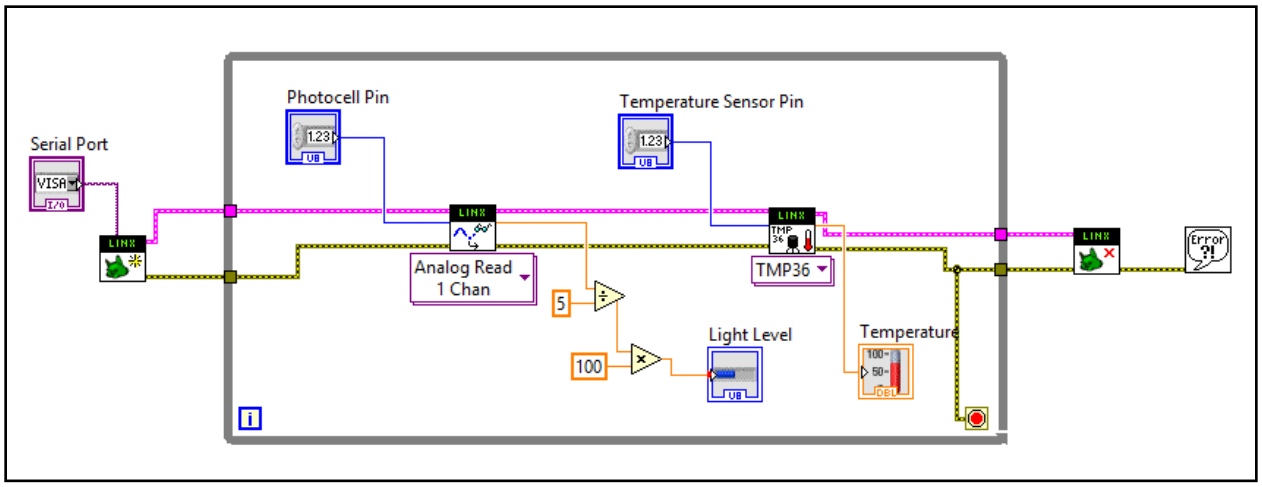
Serial Port
Photocell Pin
Temperature Sensor Pin
Analog Read
1 Chan
5
100
TMP36
Light Level
Temperature

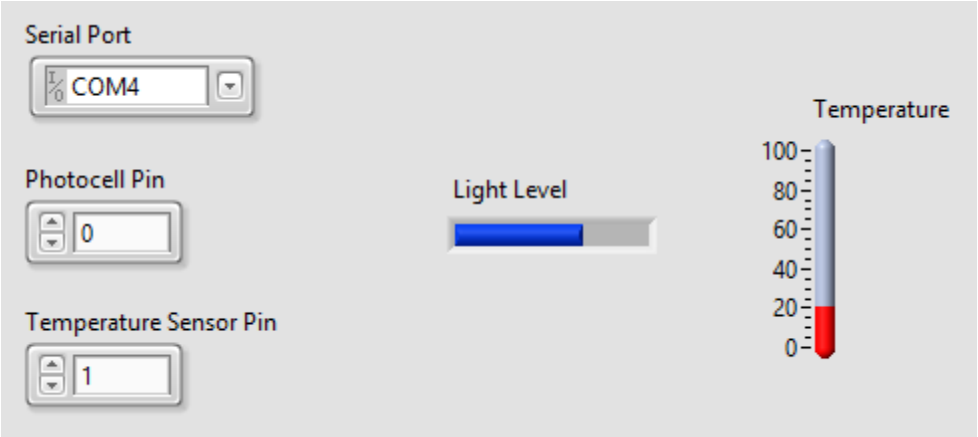
Serial Port
COM4
Photocell Pin
0
Temperature Sensor Pin
1
Light Level
Temperature
100
80
60
40
20
0

Chapter 5

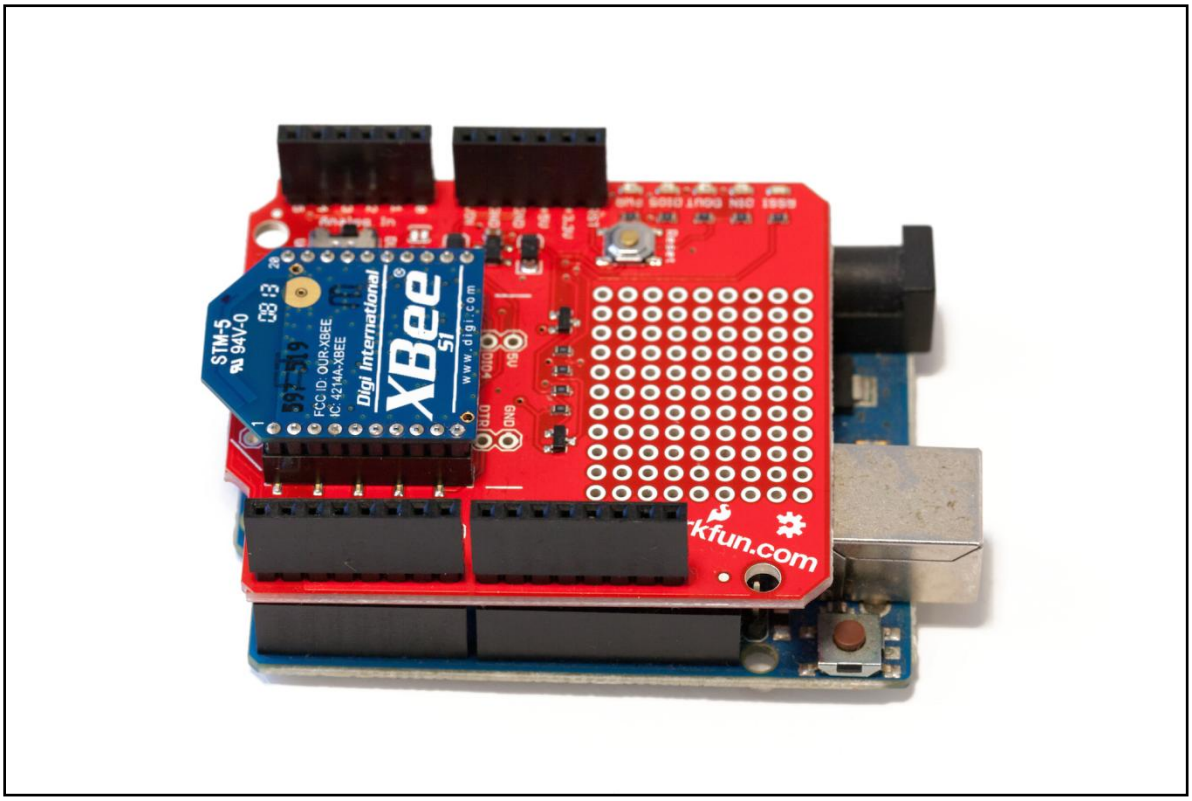
XBee
Digi International
www.digi.com
STM-5
94V-0
FCC ID: OUR-XBEE
IC: 4214A-XBEE
kfun.com

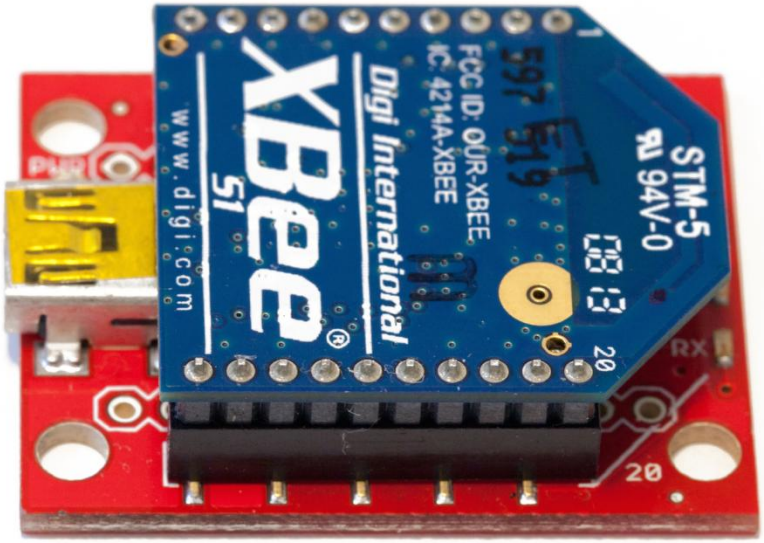
STM-5
94V-0
FCC ID: OUR-XBEE
IC: 4214A-XBEE
Digi International
XBee
S1
www.digi.com
PWR
RX
20

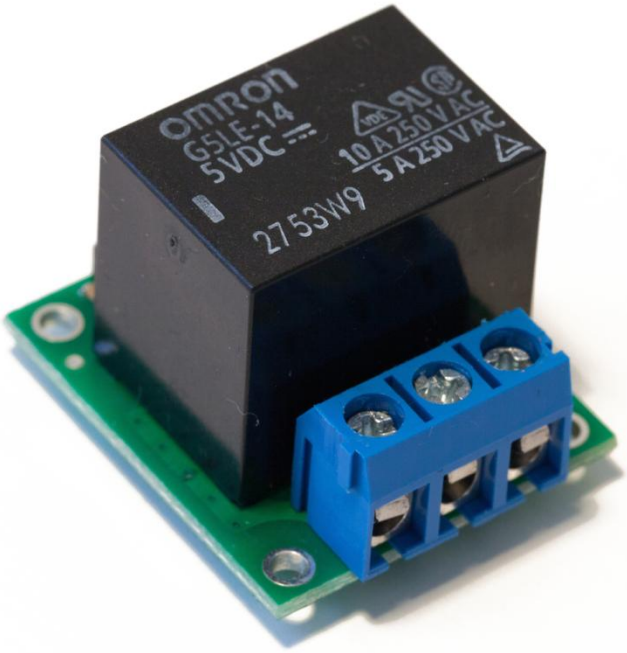
omron
G5LE-14
5VDC
10A 250VAC
5A 250VAC
2753W9

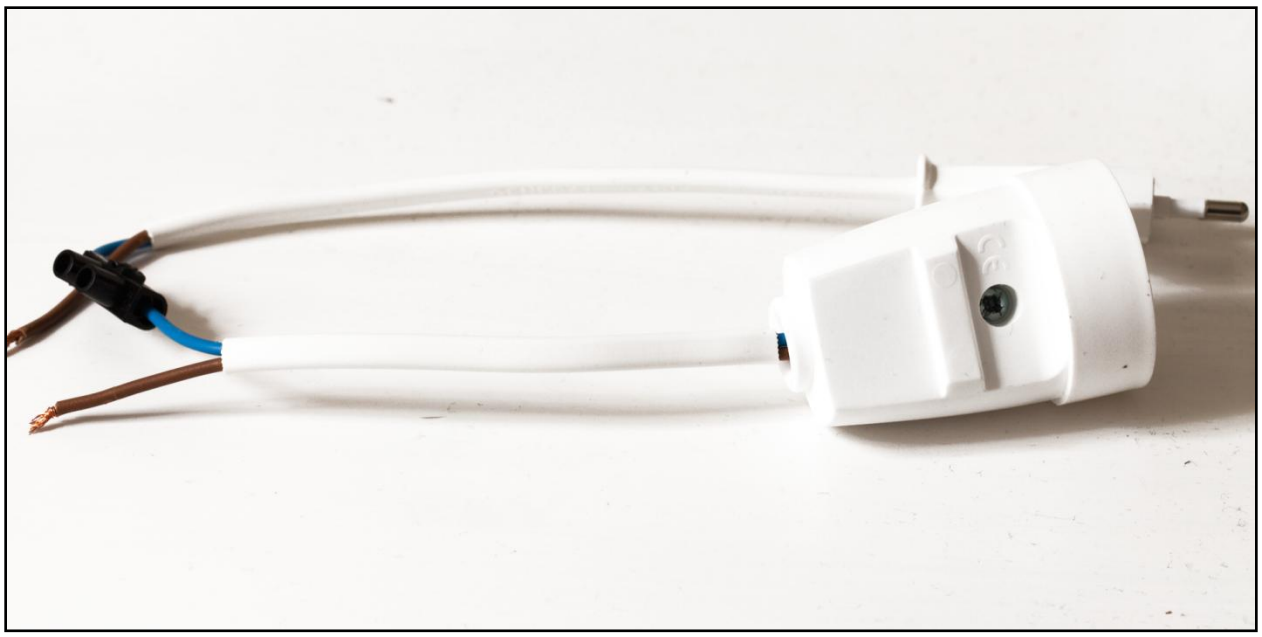

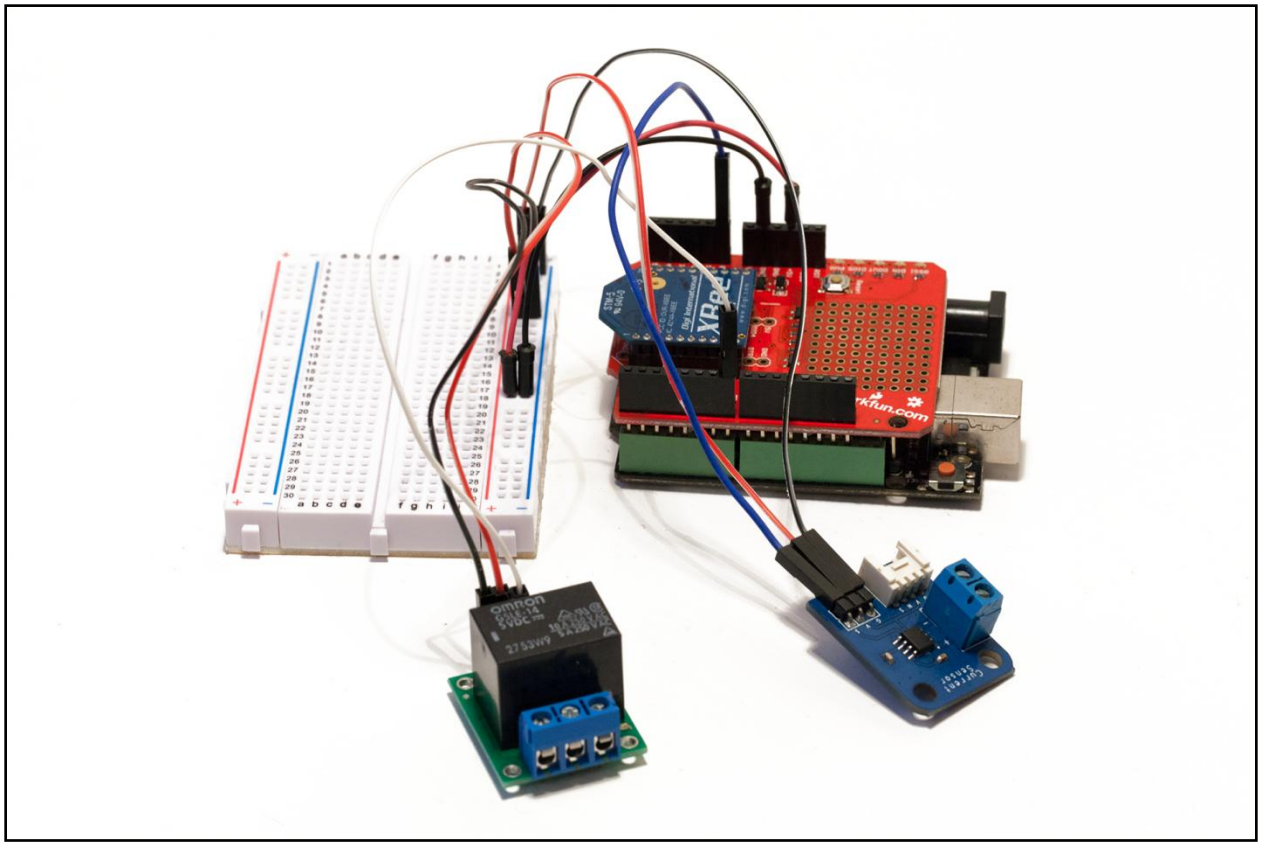
omron
G5LE-14
5VDC
XBee
sparkfun.com

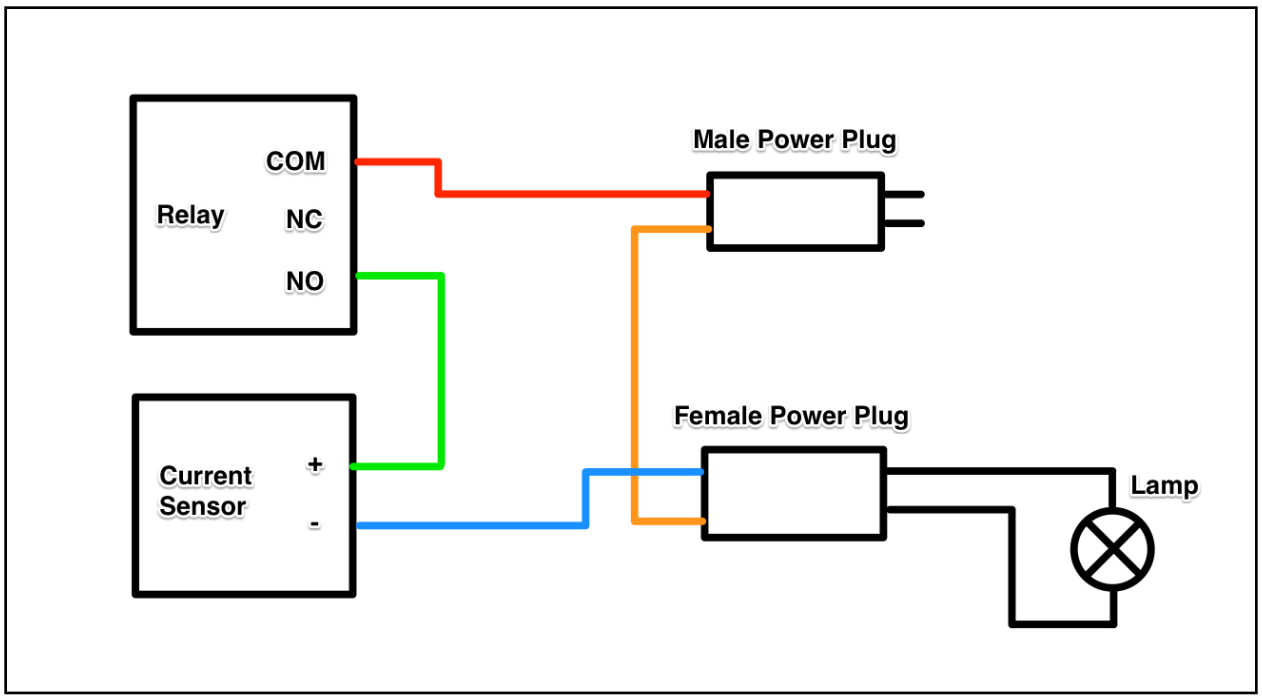
Relay
COM
NC
NO
Current
Sensor
+
-
Male Power Plug
Female Power Plug
Lamp

LINX
LINX
Error
?!

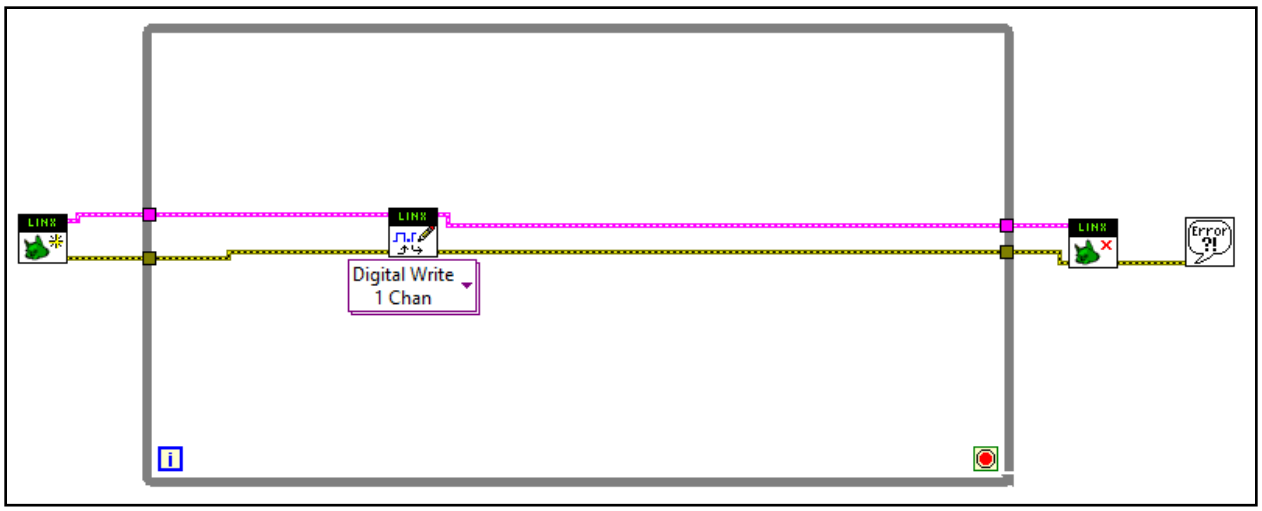
Digital Write
1 Chan

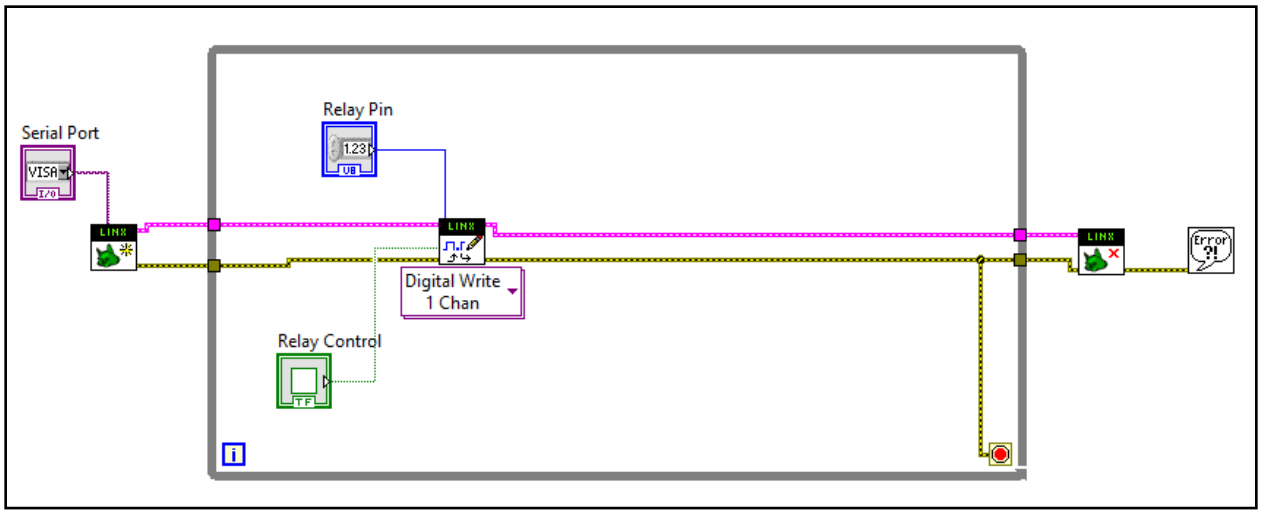
Serial Port
Relay Pin
Digital Write
1 Chan
Relay Control

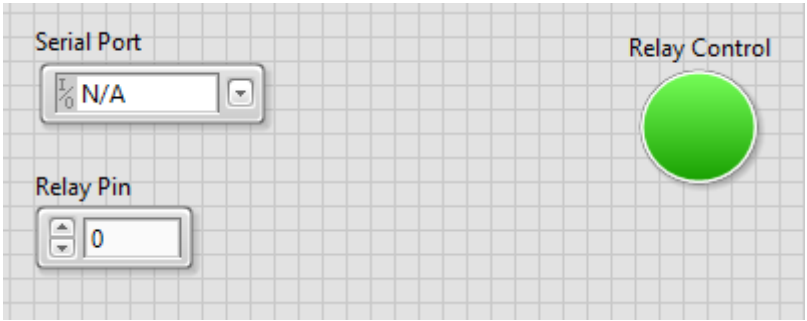
Serial Port
N/A
Relay Control
Relay Pin
0

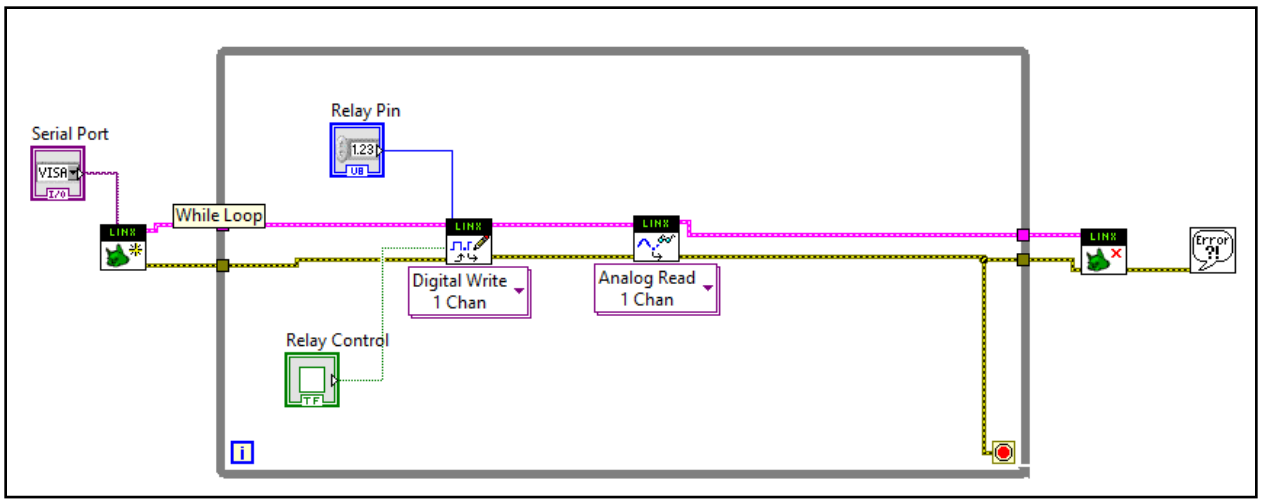
Serial Port
VISA
I/O
While Loop
Relay Pin
1.23
U8
Digital Write
1 Chan
Analog Read
1 Chan
Relay Control
TF
Error
?!

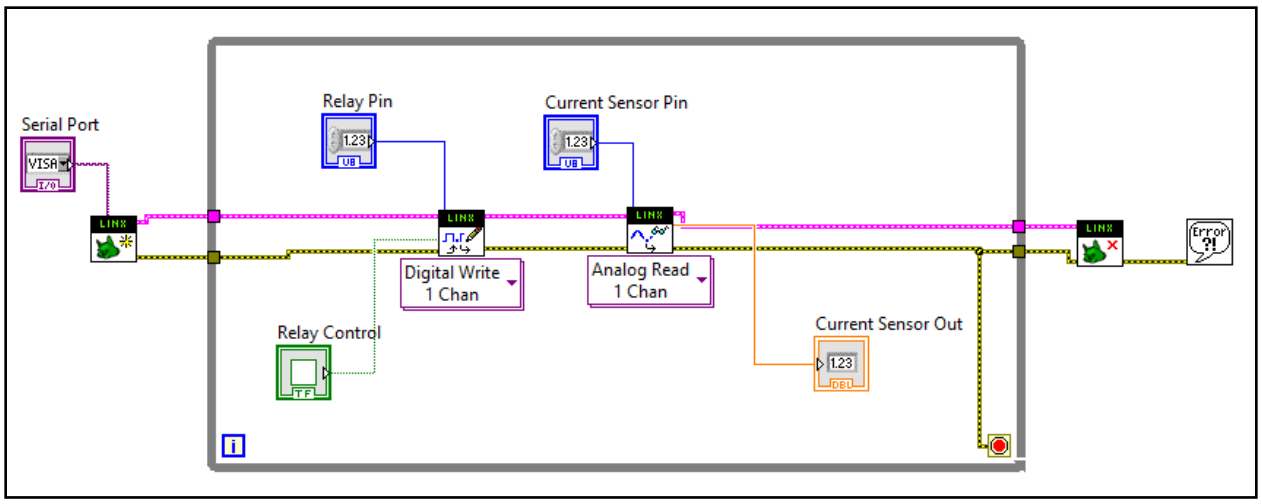
Serial Port
VISA
I/O
Relay Pin
1.23
U8
Current Sensor Pin
1.23
U8
Digital Write
1 Chan
Analog Read
1 Chan
Relay Control
TF
Current Sensor Out
1.23
DBL
Error
?!

Serial Port
COM4
Relay Pin
7
Current Sensor Pin
0
Relay Control
Current Sensor Out
1.19141

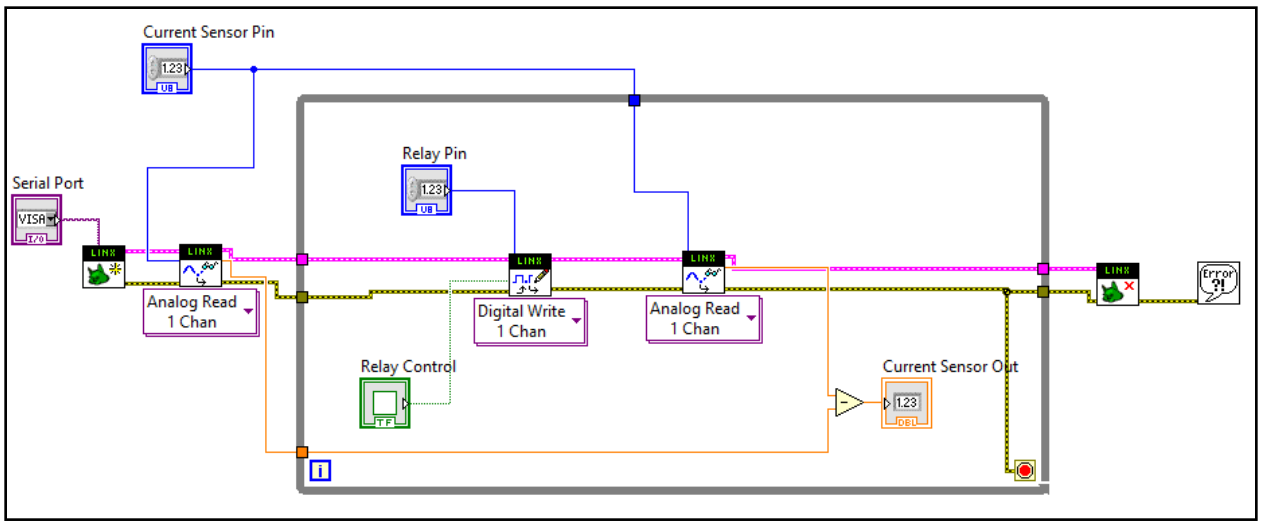
Current Sensor Pin
Serial Port
Relay Pin
Analog Read
1 Chan
Digital Write
1 Chan
Analog Read
1 Chan
Relay Control
Current Sensor Out

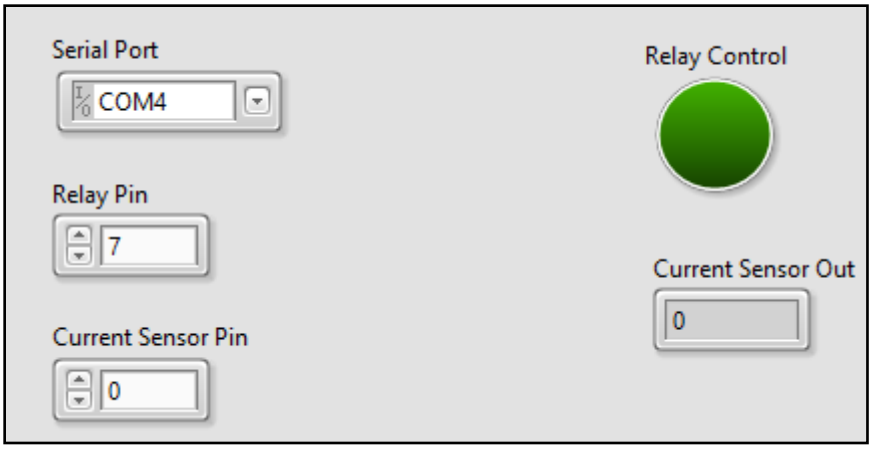
Serial Port
COM4
Relay Control
Relay Pin
7
Current Sensor Out
0
Current Sensor Pin
0

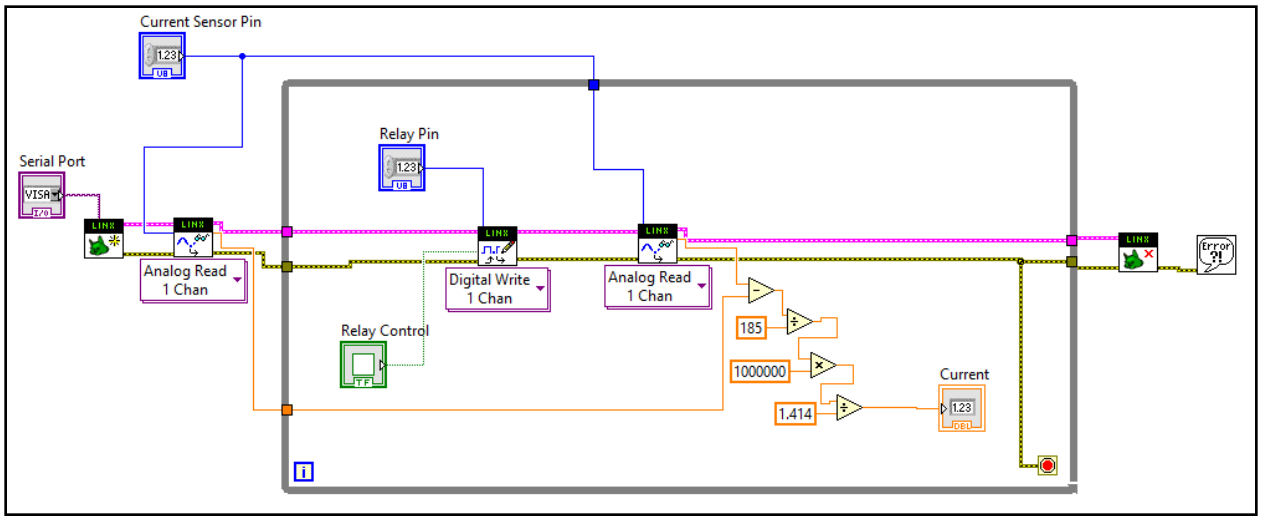
Current Sensor Pin
Serial Port
Relay Pin
Analog Read
1 Chan
Digital Write
1 Chan
Analog Read
1 Chan
Relay Control
185
1000000
1.414
Current

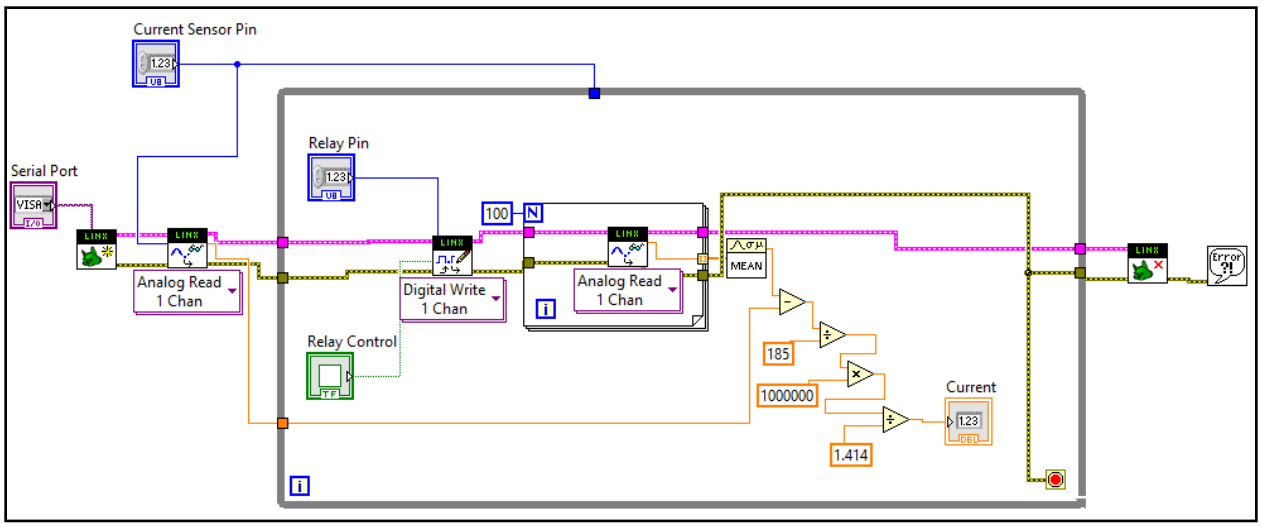
Current Sensor Pin
Serial Port
Relay Pin
100
Analog Read
1 Chan
Digital Write
1 Chan
Relay Control
Analog Read
1 Chan
MEAN
185
1000000
1.414
Current
Error ?!

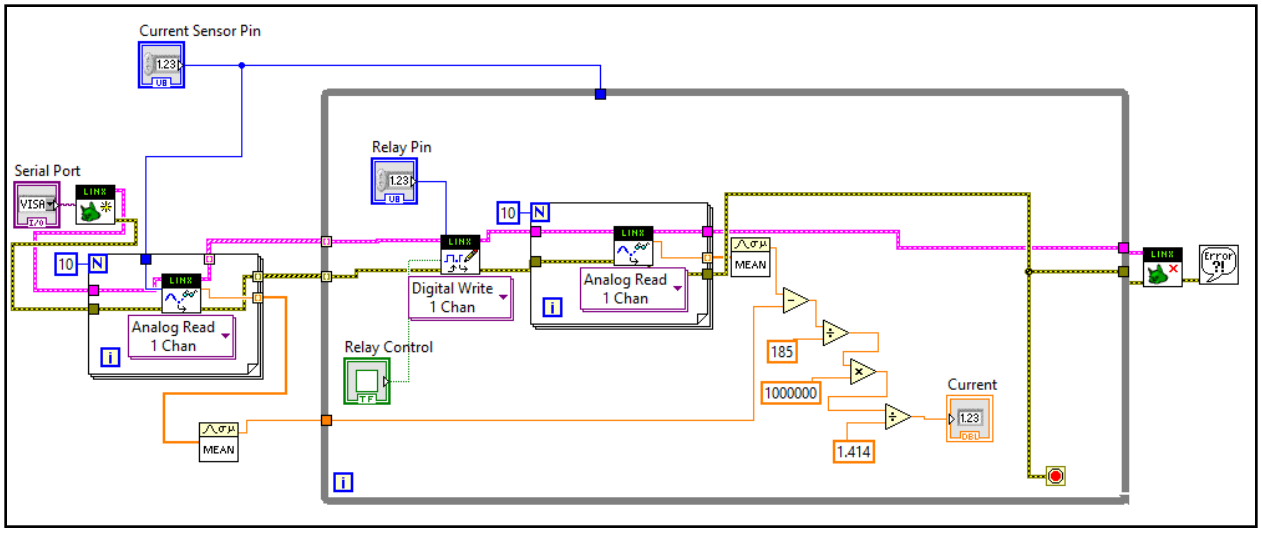
Current Sensor Pin
Serial Port
Relay Pin
10
Analog Read
1 Chan
Digital Write
1 Chan
Relay Control
Analog Read
1 Chan
MEAN
185
1000000
1.414
Current
Error ?!

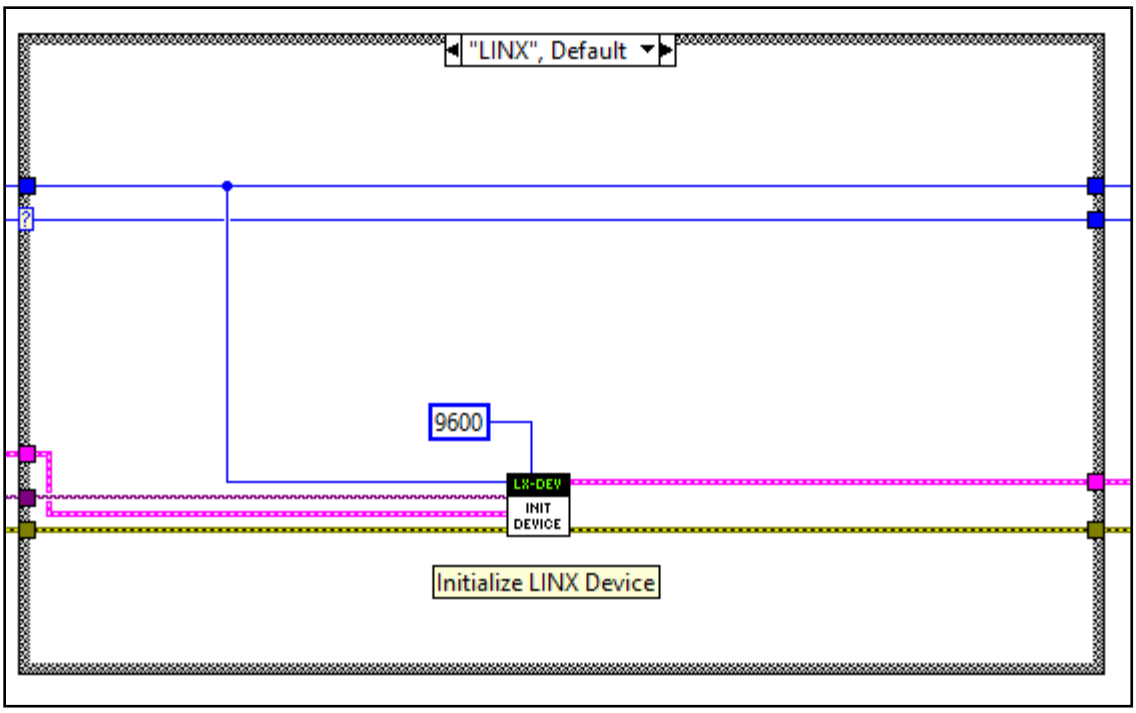
"LINX", Default
9600
LX-DEV
INIT
DEVICE
Initialize LINX Device

Serial Port
COM4
Relay Pin
7
Current Sensor Pin
0
Relay Control
Current
0.93329

Chapter 6

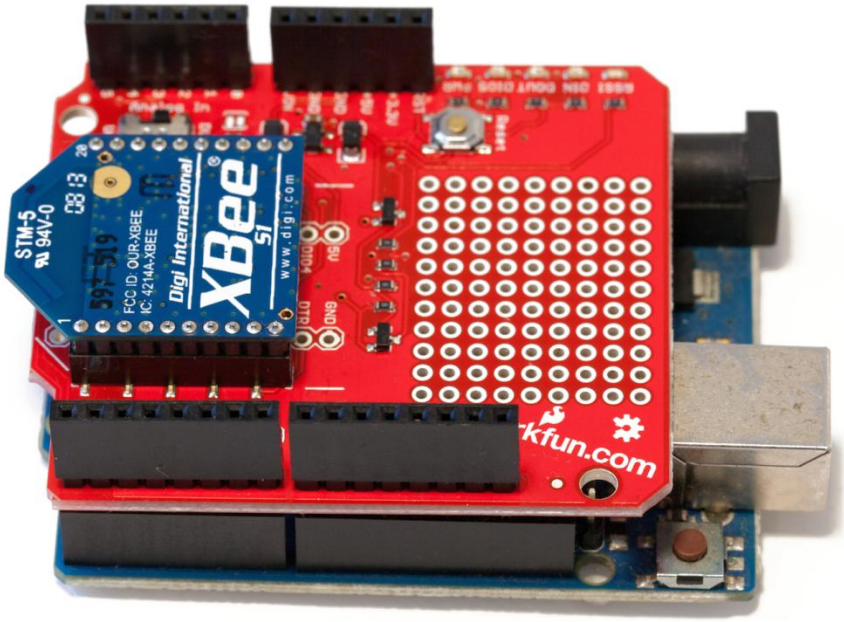
STM-5
94V-0
FCC ID: OUR-XBEE
IC: 4214A-XBEE
Digi International
XBee
S1
www.digi.com
5V
GND
DTR
kfun.com

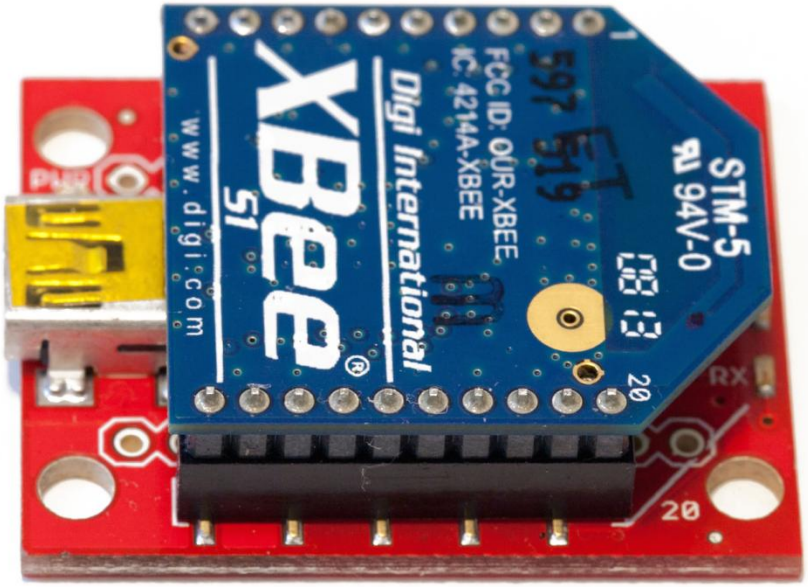
STM-5
94V-0
FCC ID: OUR-XBEE
IC: 4214A-XBEE
Digi International
XBee
S1
www.digi.com
PWR
RX
20

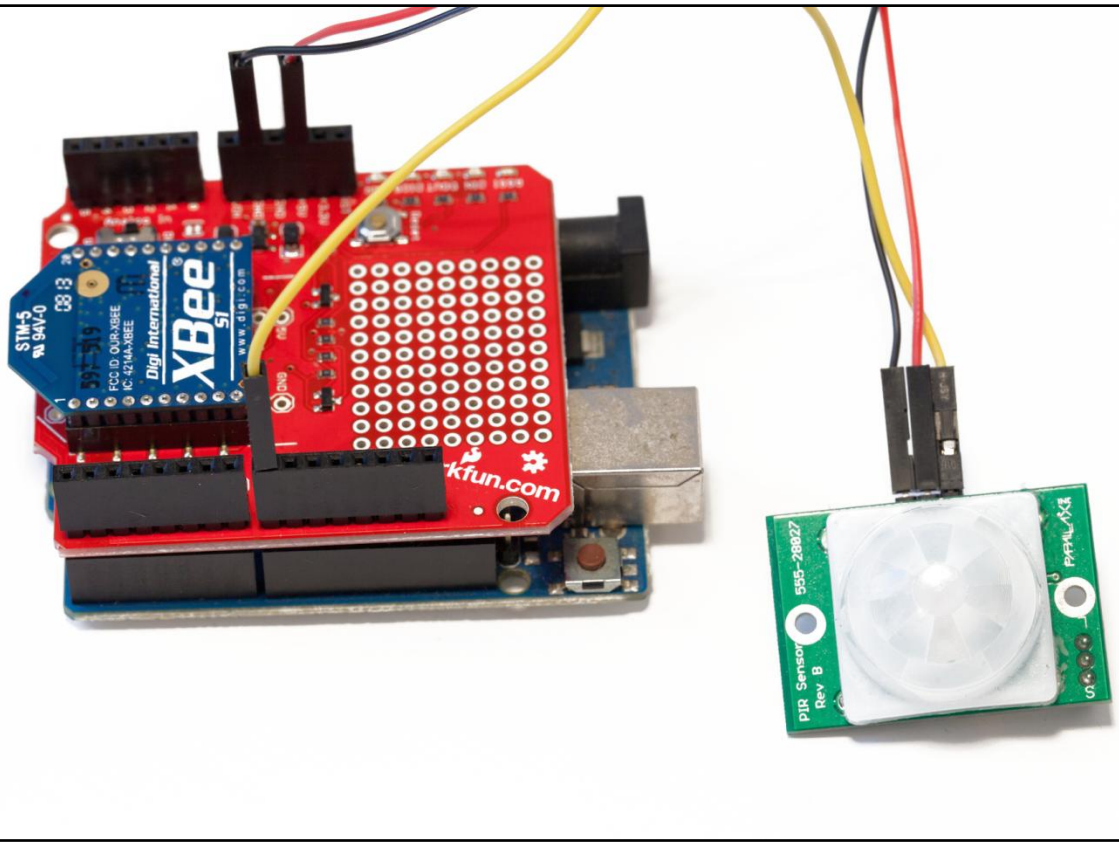
STM-5
94V-0
FCC ID: OUR-XBEE
IC: 4214A-XBEE
Digi International
XBee
S1
www.digi.com
PIR Sensor
Rev B
555-28027
PAYPAL

LINX
LINX
Error
?!

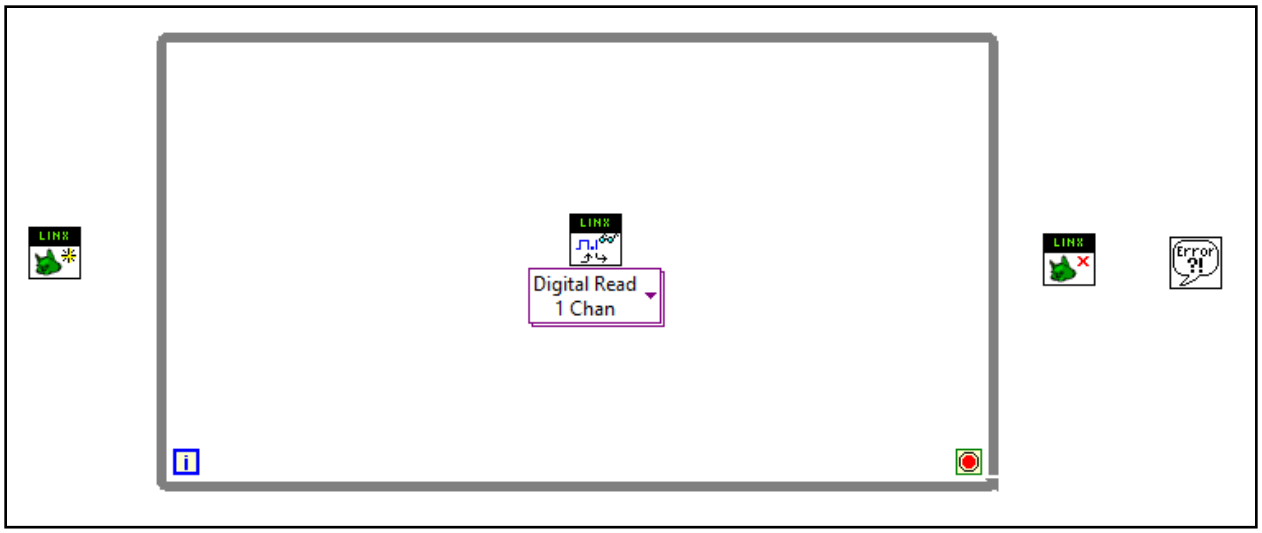
LINX
LINX
Digital Read
1 Chan
LINX
Error
?!

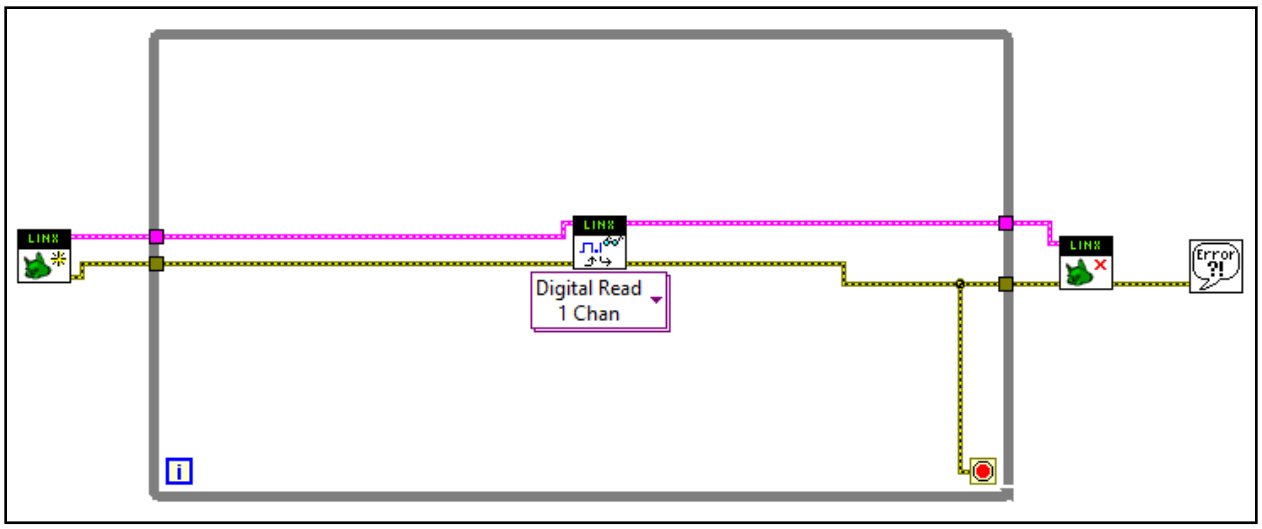
LINX
LINX
Digital Read
1 Chan
LINX
Error
?!

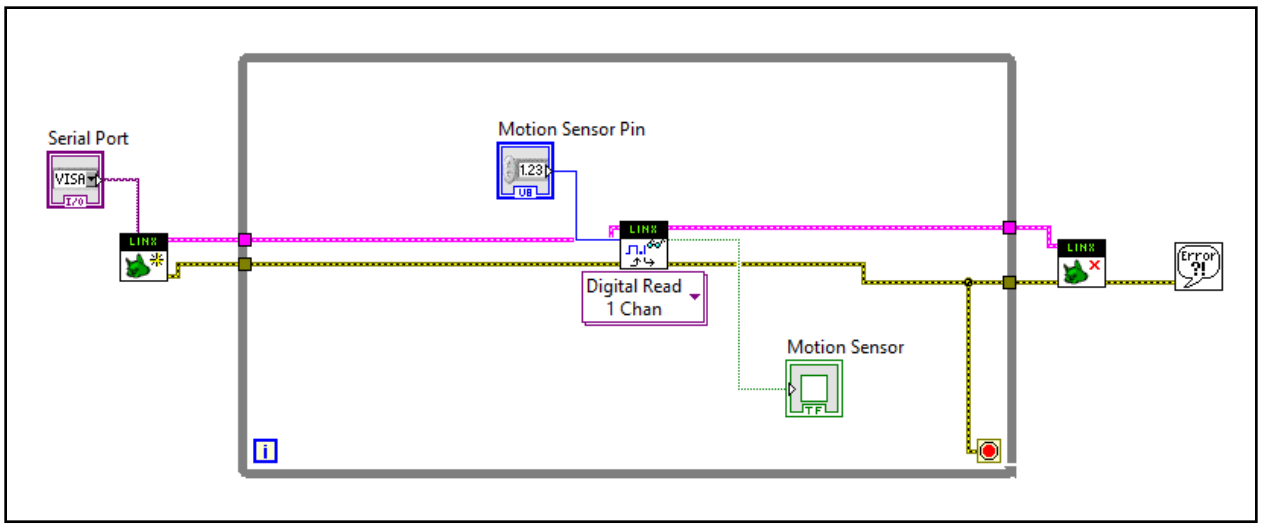
Serial Port
VISA
I/O
Motion Sensor Pin
1.23
U8
LINX
Digital Read
1 Chan
Motion Sensor
TF
Error
?!

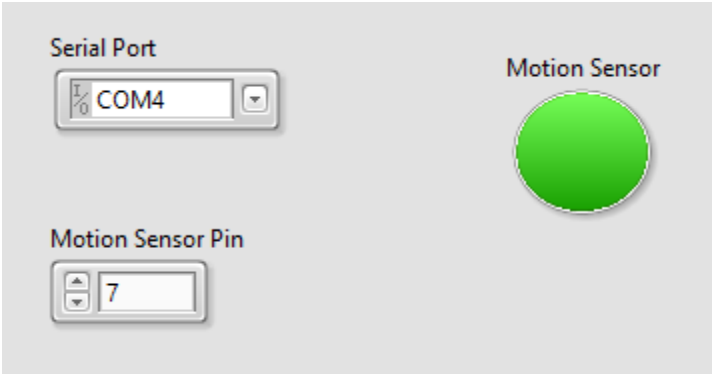
Serial Port
COM4
Motion Sensor
Motion Sensor Pin
7

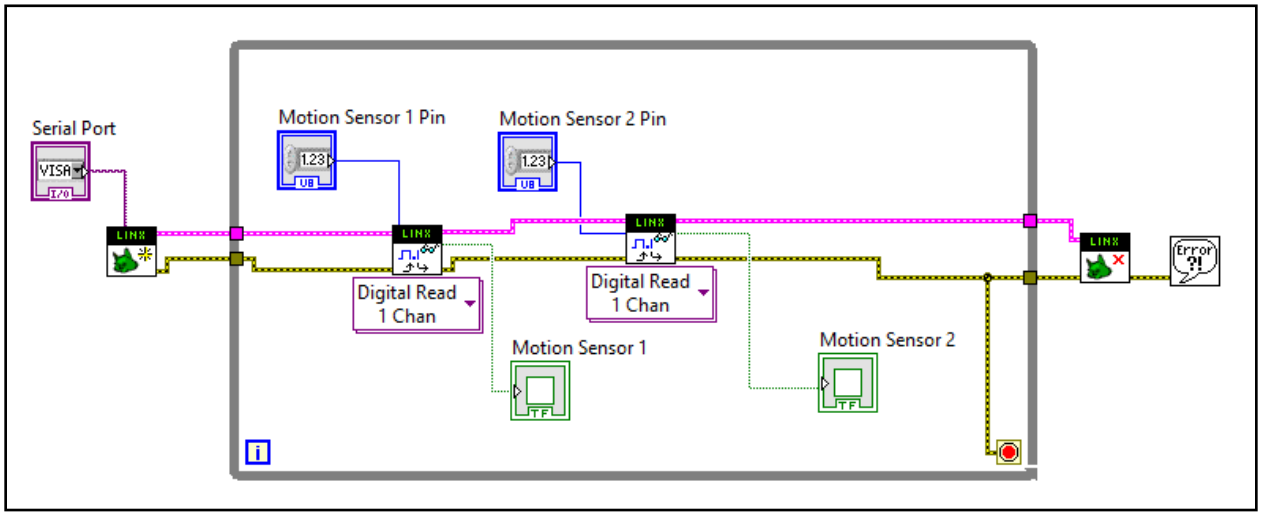
Serial Port
VISA
I/O
Motion Sensor 1 Pin
1.23
U8
Motion Sensor 2 Pin
LINX
Digital Read
1 Chan
Motion Sensor 1
TF
Motion Sensor 2
Error
?!

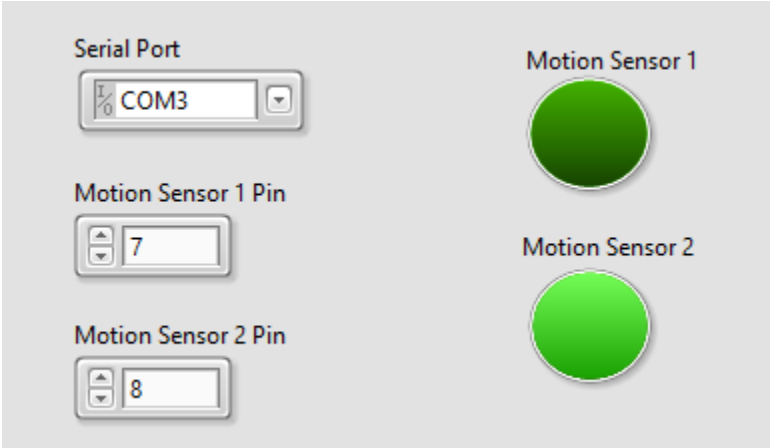
Serial Port
COM3
Motion Sensor 1 Pin
7
Motion Sensor 2 Pin
8
Motion Sensor 1
Motion Sensor 2

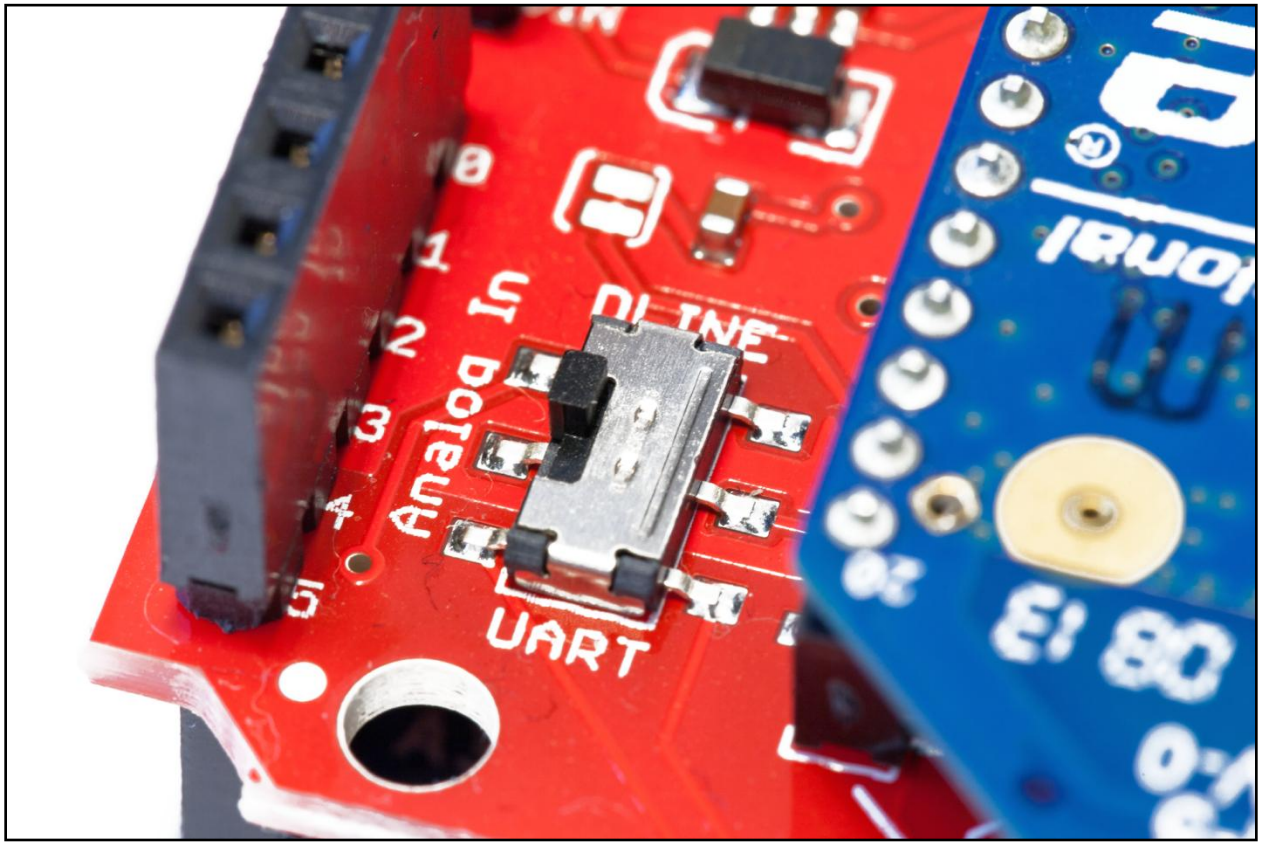
Analog
UART

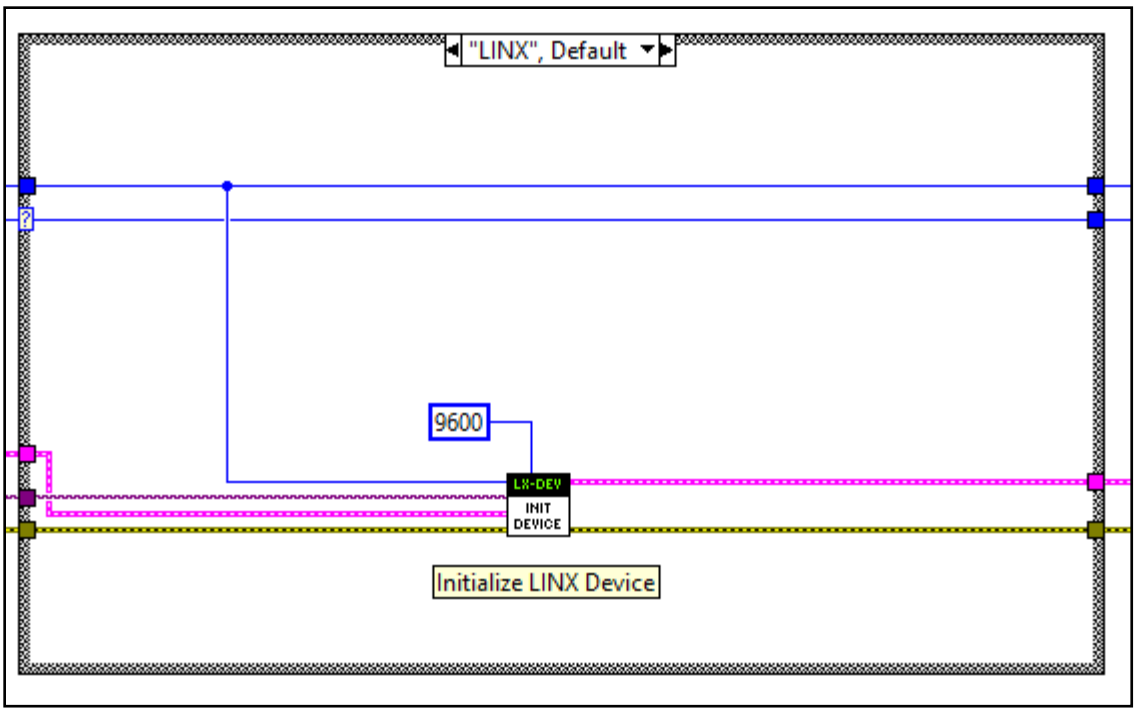
"LINX", Default
9600
LX-DEV
INIT
DEVICE
Initialize LINX Device

Chapter 7

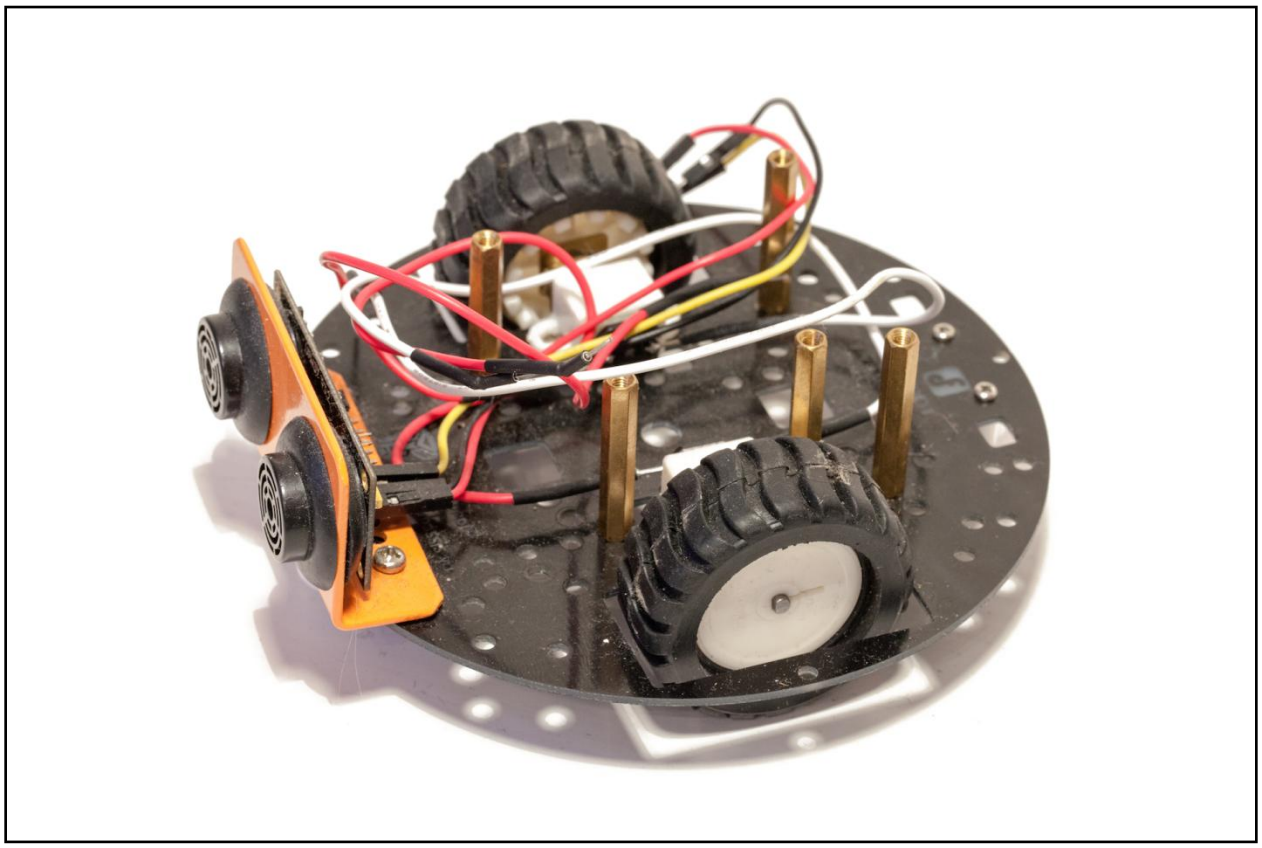

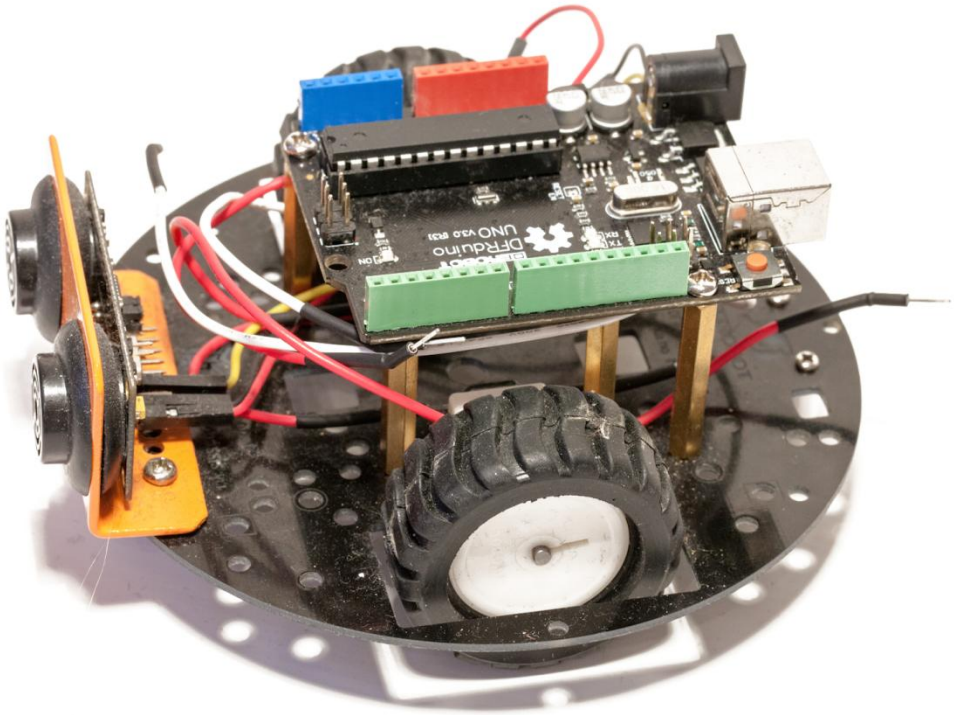
DFRobot
DFRduino
UNO v3.0 R3(3)

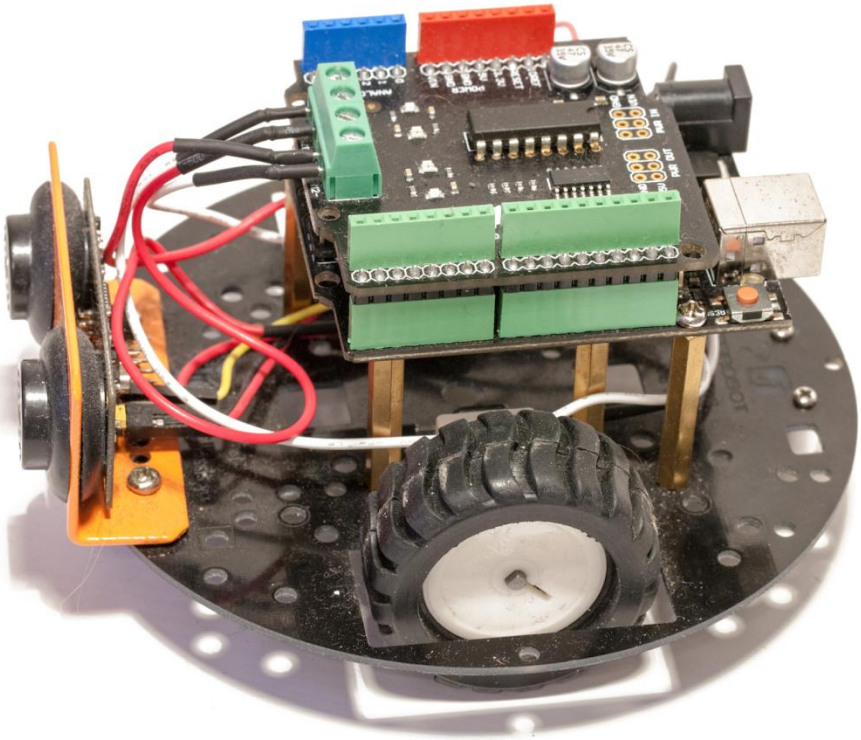

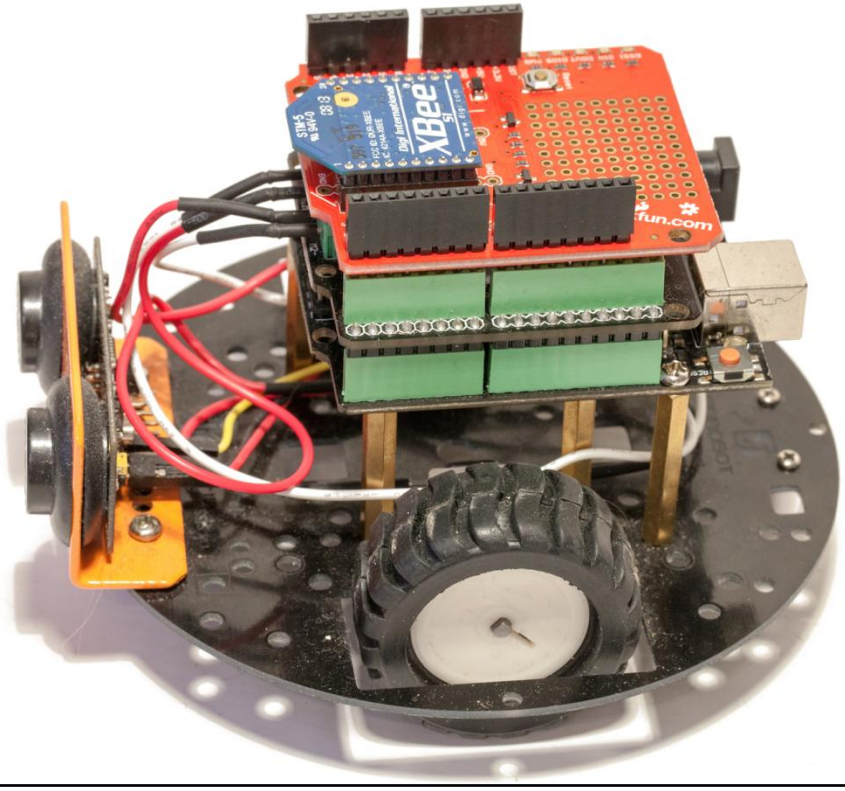
XBee
Digi International
STM-5
fun.com

LINK
LINK
Error
?!

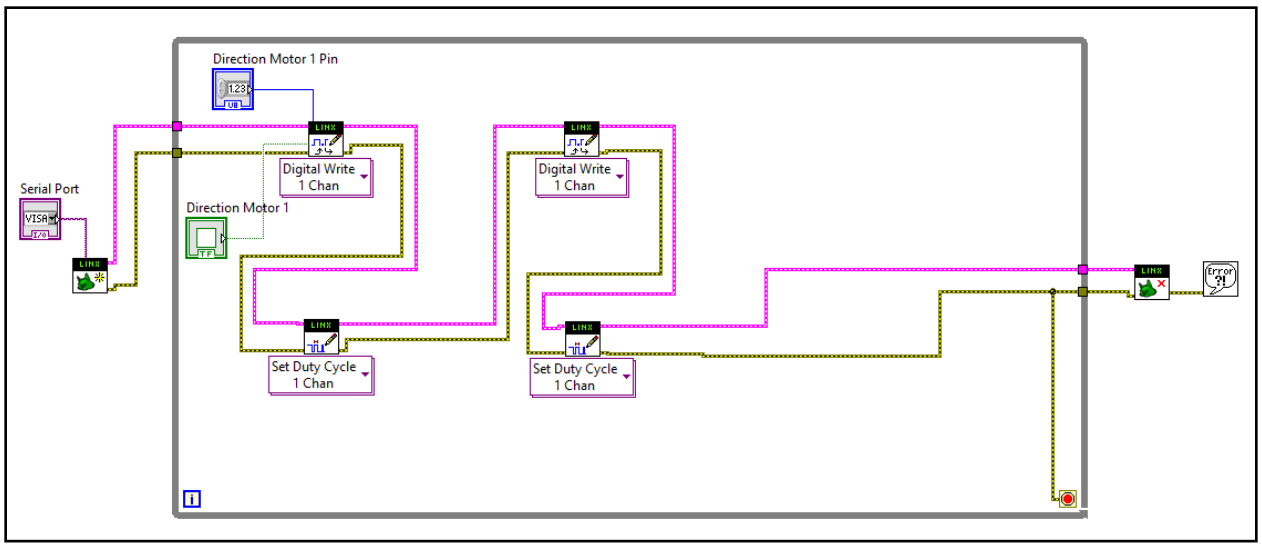
Direction Motor 1 Pin
Serial Port
Digital Write
1 Chan
Direction Motor 1
Digital Write
1 Chan
Set Duty Cycle
1 Chan
Set Duty Cycle
1 Chan

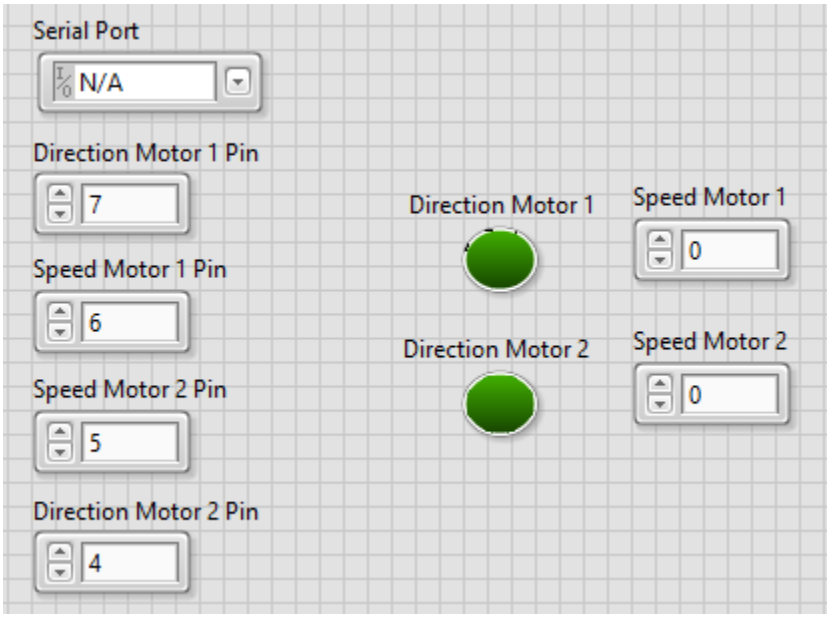
Serial Port
N/A
Direction Motor 1 Pin
7
Speed Motor 1 Pin
6
Speed Motor 2 Pin
5
Direction Motor 2 Pin
4
Direction Motor 1
Speed Motor 1
0
Direction Motor 2
Speed Motor 2
0

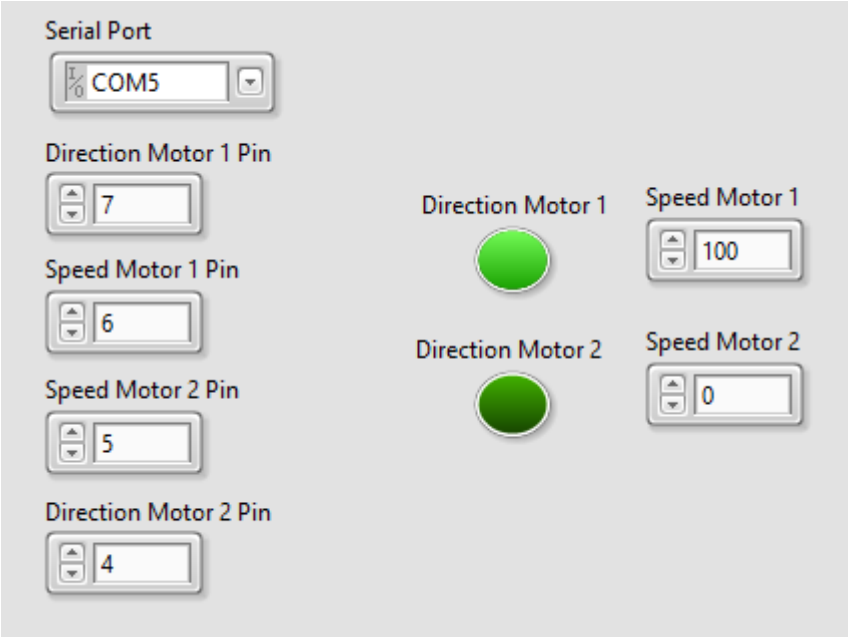
Serial Port
COM5
Direction Motor 1 Pin
7
Speed Motor 1 Pin
6
Speed Motor 2 Pin
5
Direction Motor 2 Pin
4
Direction Motor 1
Direction Motor 2
Speed Motor 1
100
Speed Motor 2
0

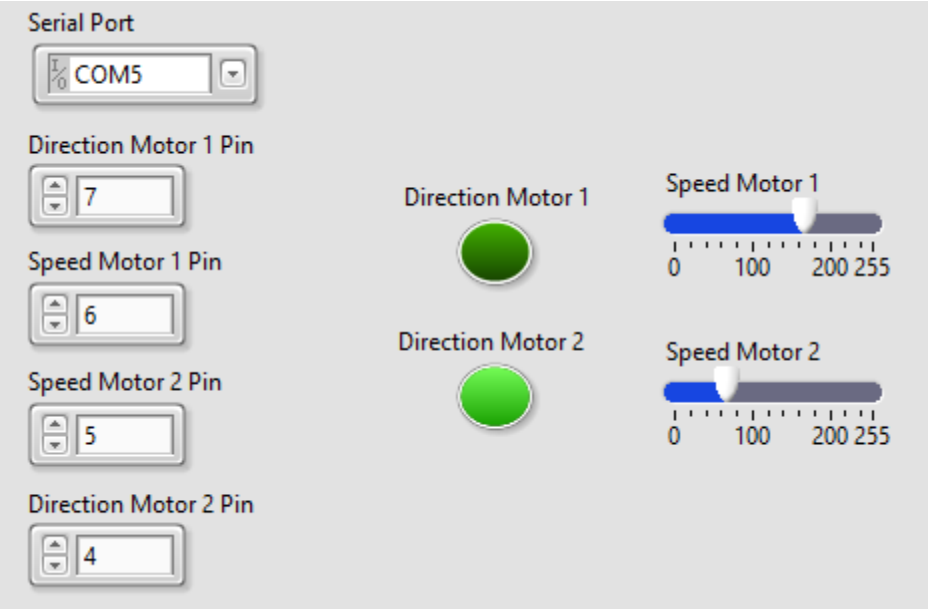
Serial Port
COM5
Direction Motor 1 Pin
7
Speed Motor 1 Pin
6
Speed Motor 2 Pin
5
Direction Motor 2 Pin
4
Direction Motor 1
Direction Motor 2
Speed Motor 1
0
100
200 255
Speed Motor 2
0
100
200 255

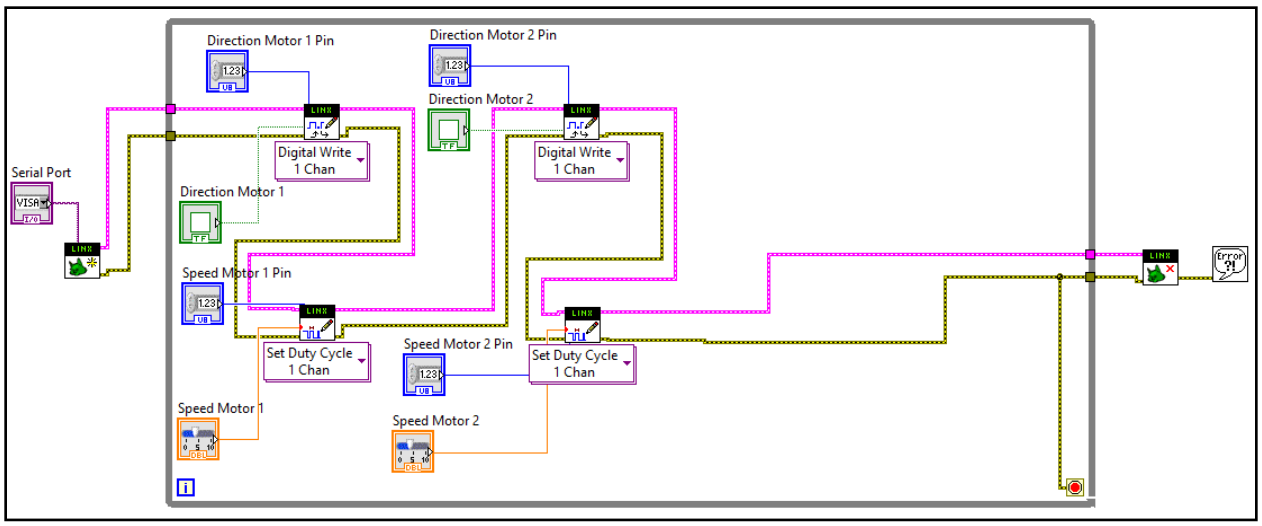
Direction Motor 1 Pin
Direction Motor 2 Pin
Direction Motor 2
Serial Port
Digital Write
1 Chan
Digital Write
1 Chan
Direction Motor 1
Speed Motor 1 Pin
Set Duty Cycle
1 Chan
Speed Motor 2 Pin
Set Duty Cycle
1 Chan
Speed Motor 1
Speed Motor 2

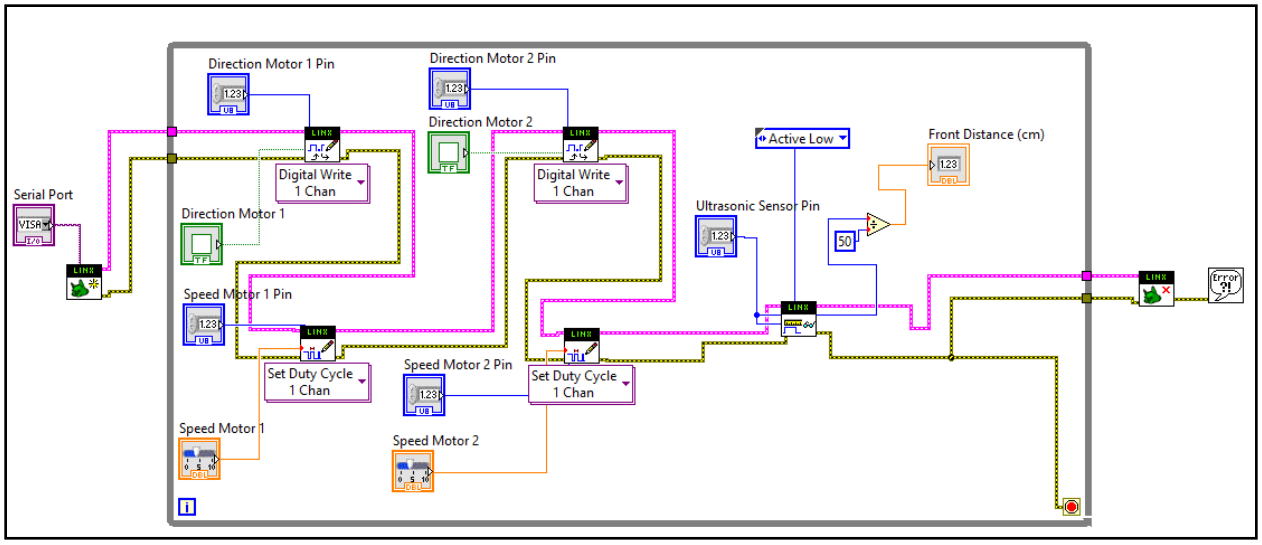
Direction Motor 1 Pin
Direction Motor 2 Pin
Direction Motor 2
Active Low
Front Distance (cm)
Serial Port
Digital Write
1 Chan
Digital Write
1 Chan
Ultrasonic Sensor Pin
Direction Motor 1
50
Speed Motor 1 Pin
Set Duty Cycle
1 Chan
Speed Motor 2 Pin
Set Duty Cycle
1 Chan
Speed Motor 1
Speed Motor 2

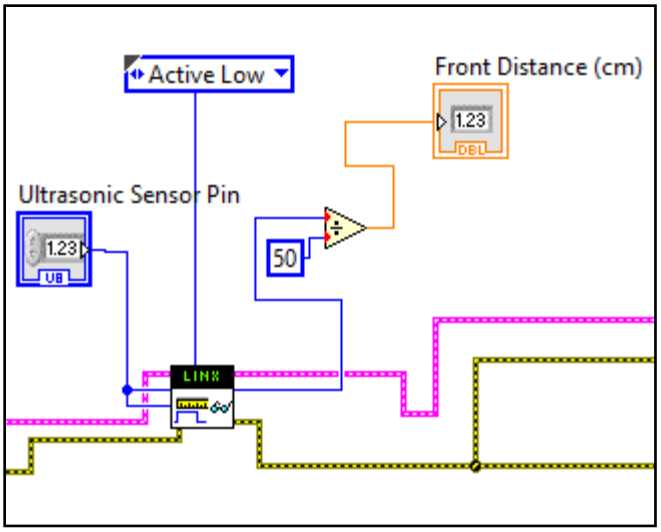
Active Low
Front Distance (cm)
Ultrasonic Sensor Pin
50

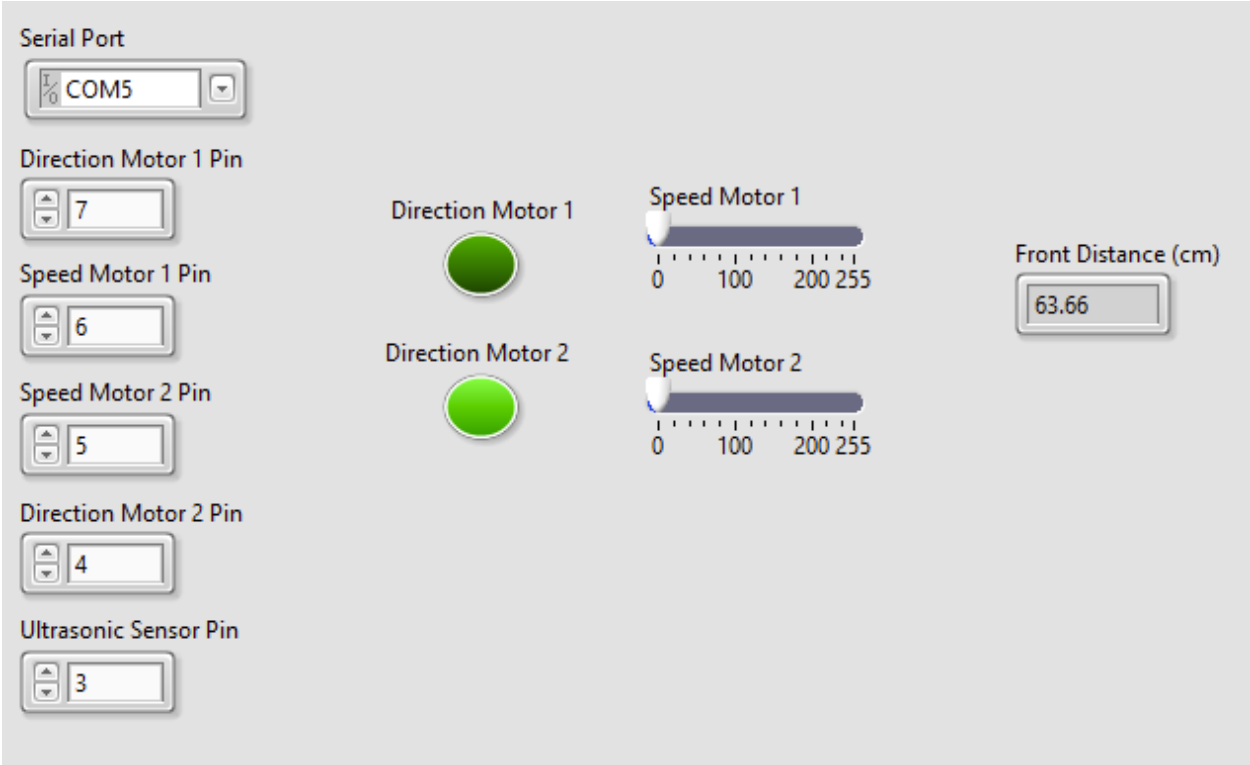
Serial Port
COM5
Direction Motor 1 Pin
7
Speed Motor 1 Pin
6
Speed Motor 2 Pin
5
Direction Motor 2 Pin
4
Ultrasonic Sensor Pin
3
Direction Motor 1
Direction Motor 2
Speed Motor 1
0
100
200 255
Speed Motor 2
0
100
200 255
Front Distance (cm)
63.66

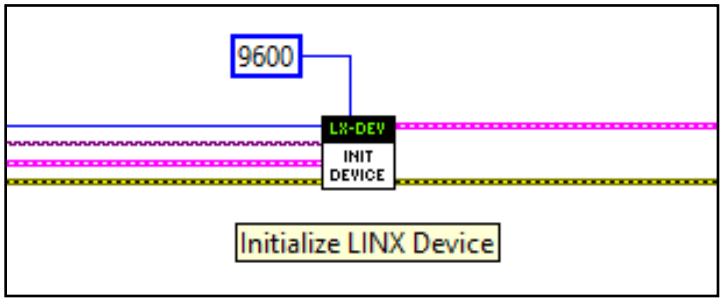
9600
LX-DEV
INIT
DEVICE
Initialize LINX Device

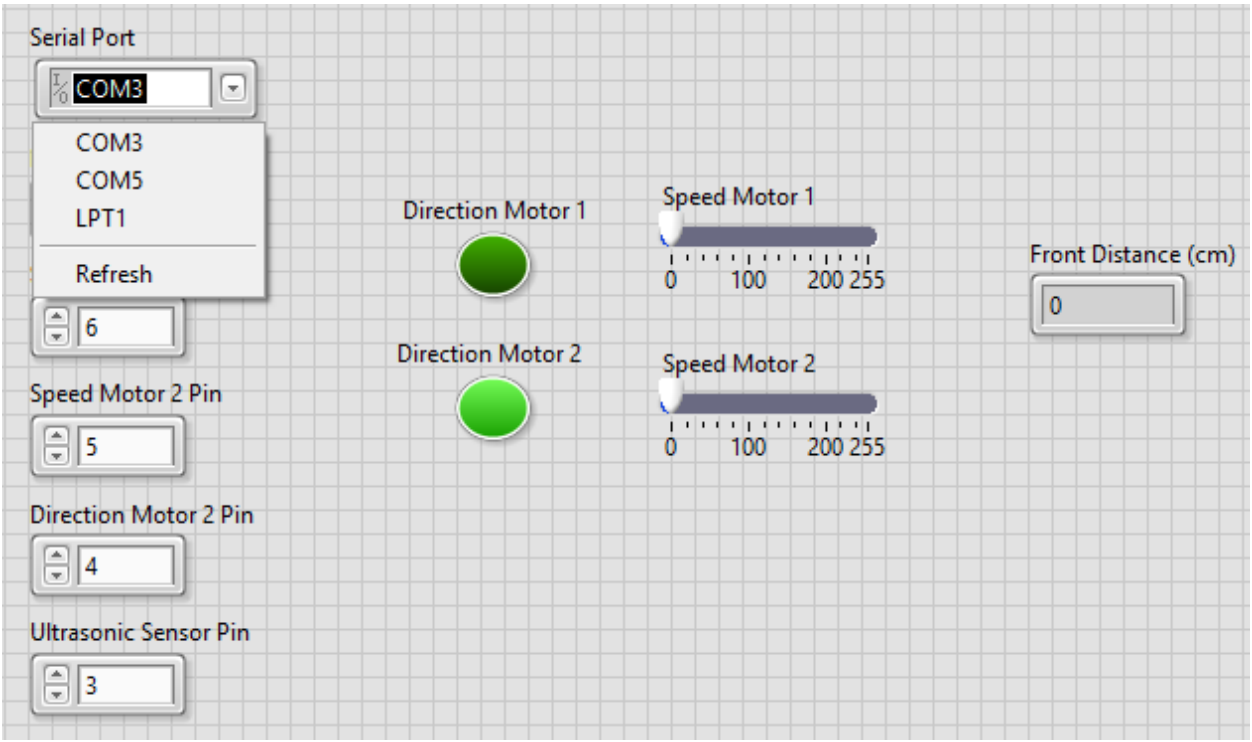
Serial Port
COM3
COM3
COM5
LPT1
Refresh
6
Speed Motor 2 Pin
5
Direction Motor 2 Pin
4
Ultrasonic Sensor Pin
3
Direction Motor 1
Direction Motor 2
Speed Motor 1
0
100
200 255
Speed Motor 2
0
100
200 255
Front Distance (cm)
0