Chapter 1: Introduction to Networking

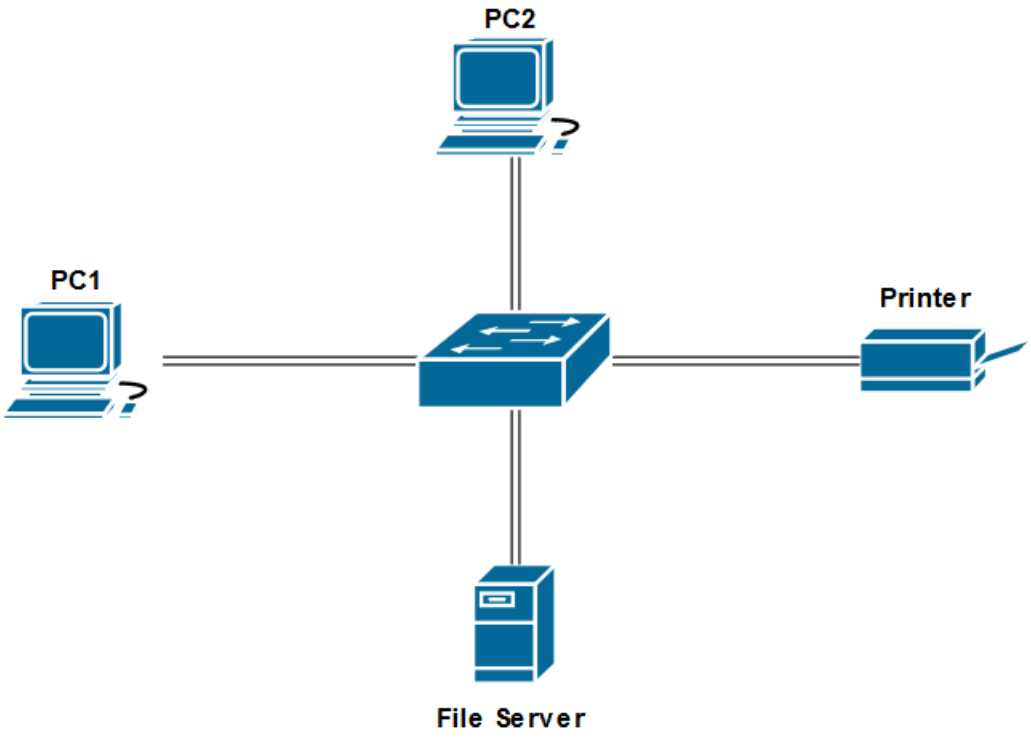

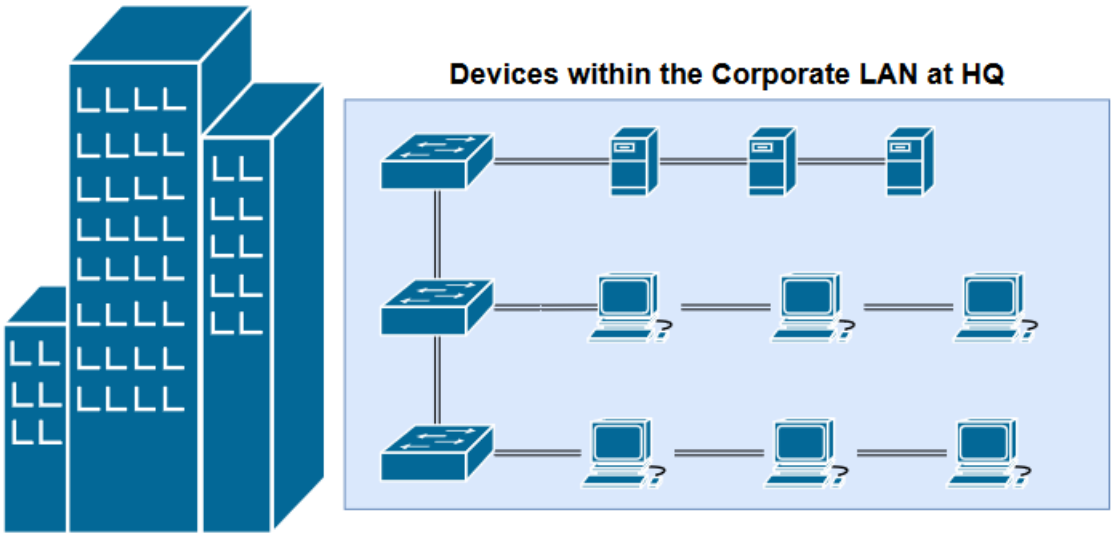

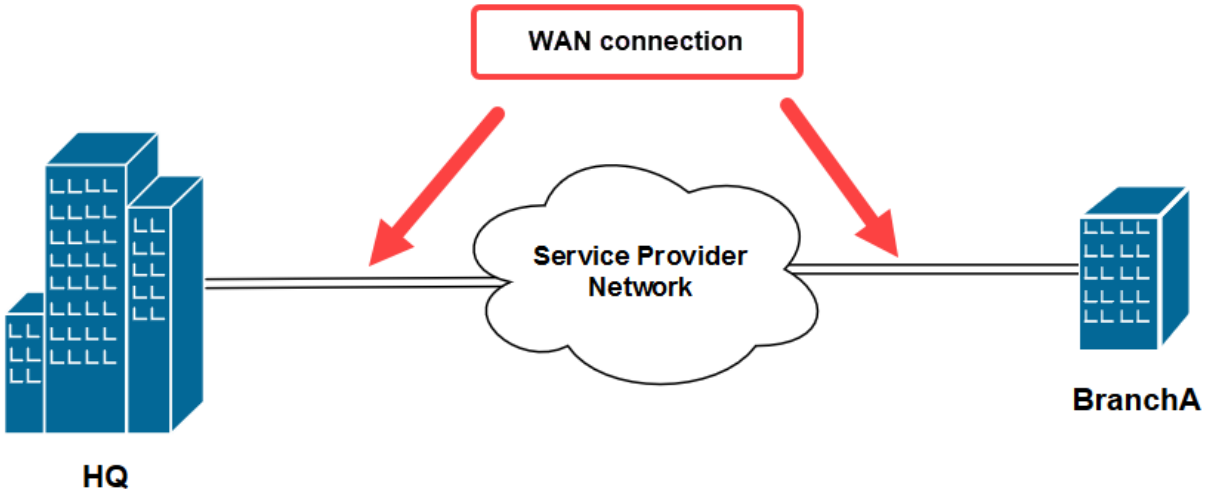

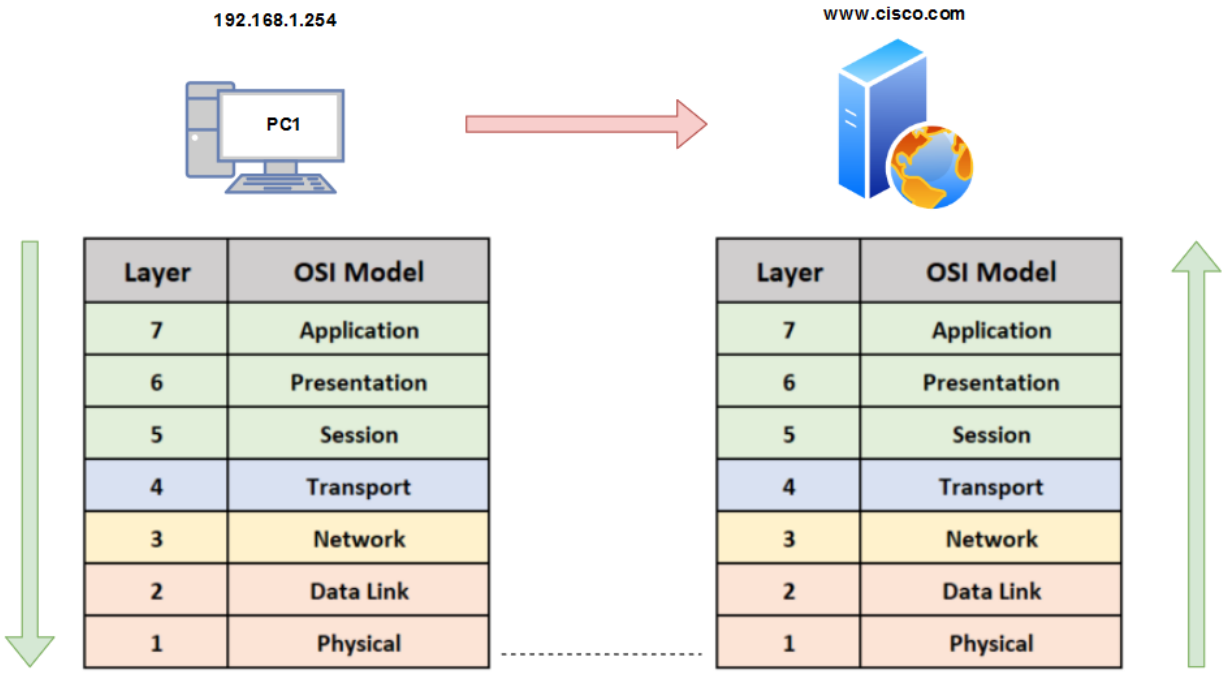

Layer	OSI Model
7	Application
6	Presentation
5	Session
4	Transport
3	Network
2	Data Link
1	Physical

Layer	OSI Model
7	Application
6	Presentation
5	Session
4	Transport
3	Network
2	Data Link
1	Physical

Layer	OSI Model	PDU
7	Application	Data
6	Presentation	
5	Session	
4	Transport	Segment
3	Network	Packet
2	Data Link	Frame
1	Physical	Bits

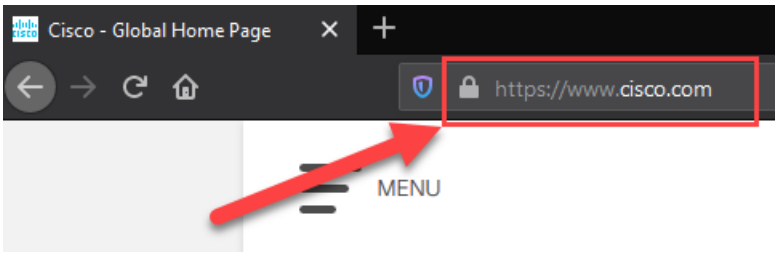

Port Ranges	Category
0 - 1,023	Well-Known Ports
1,024 - 49,151	Registered Ports
49,152 - 65,535	Private/Dynamic Ports

Segment

Source Port	DATA
Destination Port	

Transport Header

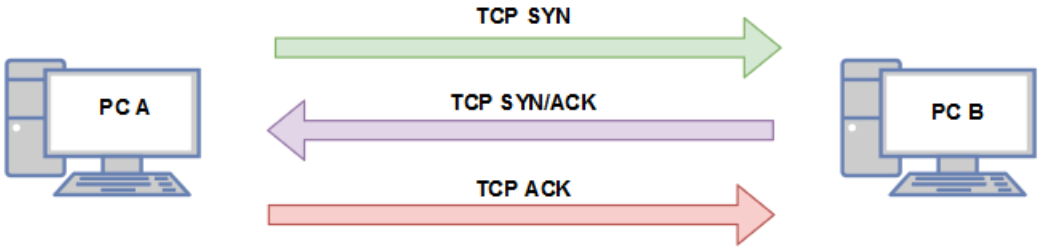

Source	Destination	Protocol	Length	Info
172.16.17.14	172.16.17.18	TCP	62	59403 → 49152 [SYN] Seq=0 Win=64240 Len=0 MSS=1460 S
172.16.17.18	172.16.17.14	TCP	62	49152 → 59403 [SYN, ACK] Seq=0 Ack=1 Win=14600 Len=0
172.16.17.14	172.16.17.18	TCP	54	59403 → 49152 [ACK] Seq=1 Ack=1 Win=64240 Len=0
172.16.17.14	172.16.17.18	HTTP	2…	GET /[redacted]l HTTP/1.1

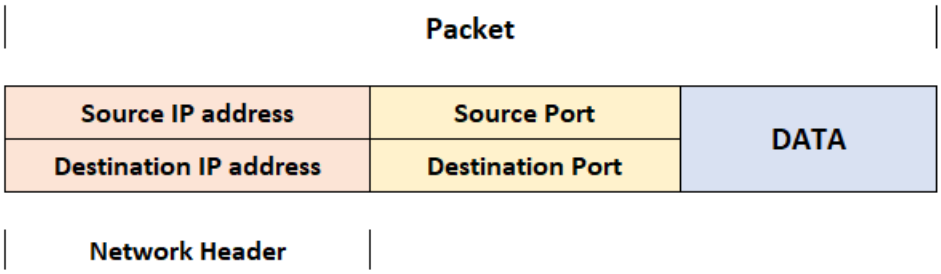

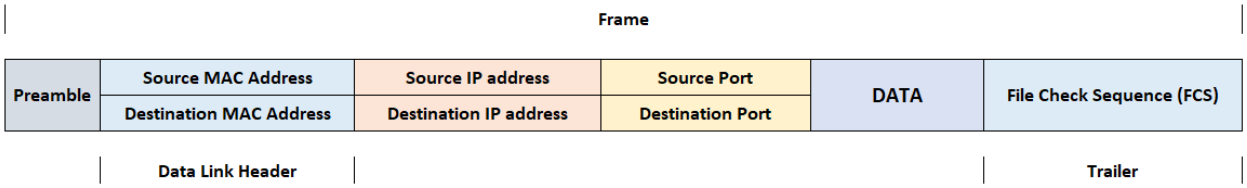

```
C:\>ipconfig /all

FastEthernet0 Connection:(default port)

   Connection-specific DNS Suffix..:
   Physical Address.................: 00E0.F717.8472
   Link-local IPv6 Address.........: FE80::2E0:F7FF:FE17:8472
   IP Address......................: 192.168.1.10
   Subnet Mask.....................: 255.255.255.0
   Default Gateway.................: 192.168.1.1
   DNS Servers.....................: 8.8.8.8
   DHCP Servers....................: 0.0.0.0
   DHCPv6 Client DUID..............: 00-01-00-01-4A-79-1E-A9-00-E0-F7-17-84-72
```

Device's MAC Address

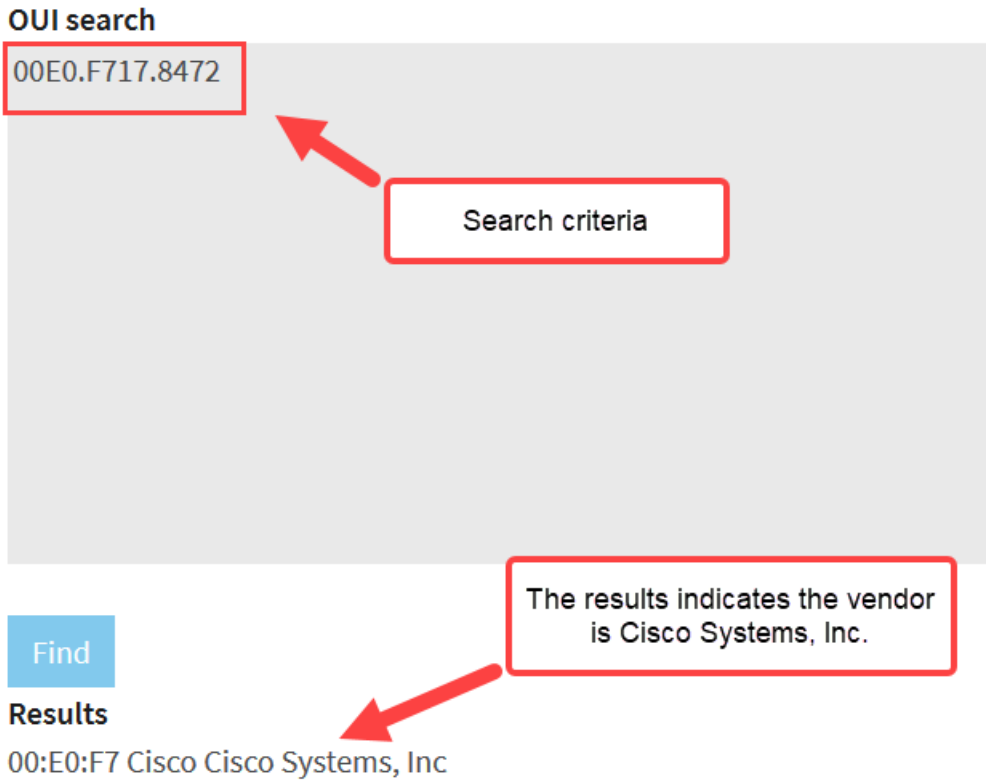

Layer	OSI Model	PDU	TCP/IP Stack	Layer
7	Application	Data	Application	4
6	Presentation			
5	Session			
4	Transport	Segment	Transport	3
3	Network	Packet	Internet	2
2	Data Link	Frame	Network Access/ Link Layer	1
1	Physical	Bits		

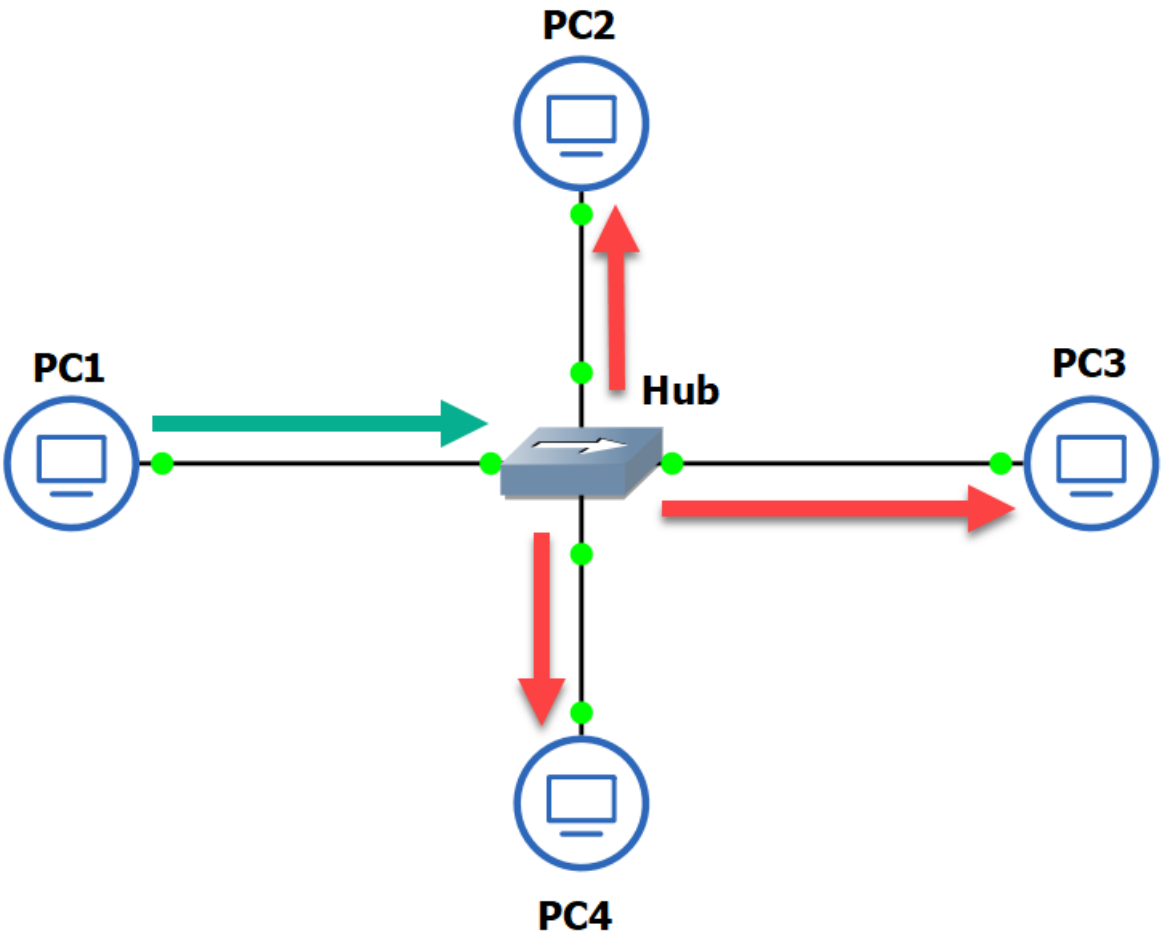
PC2
PC1
Hub
PC3
PC4

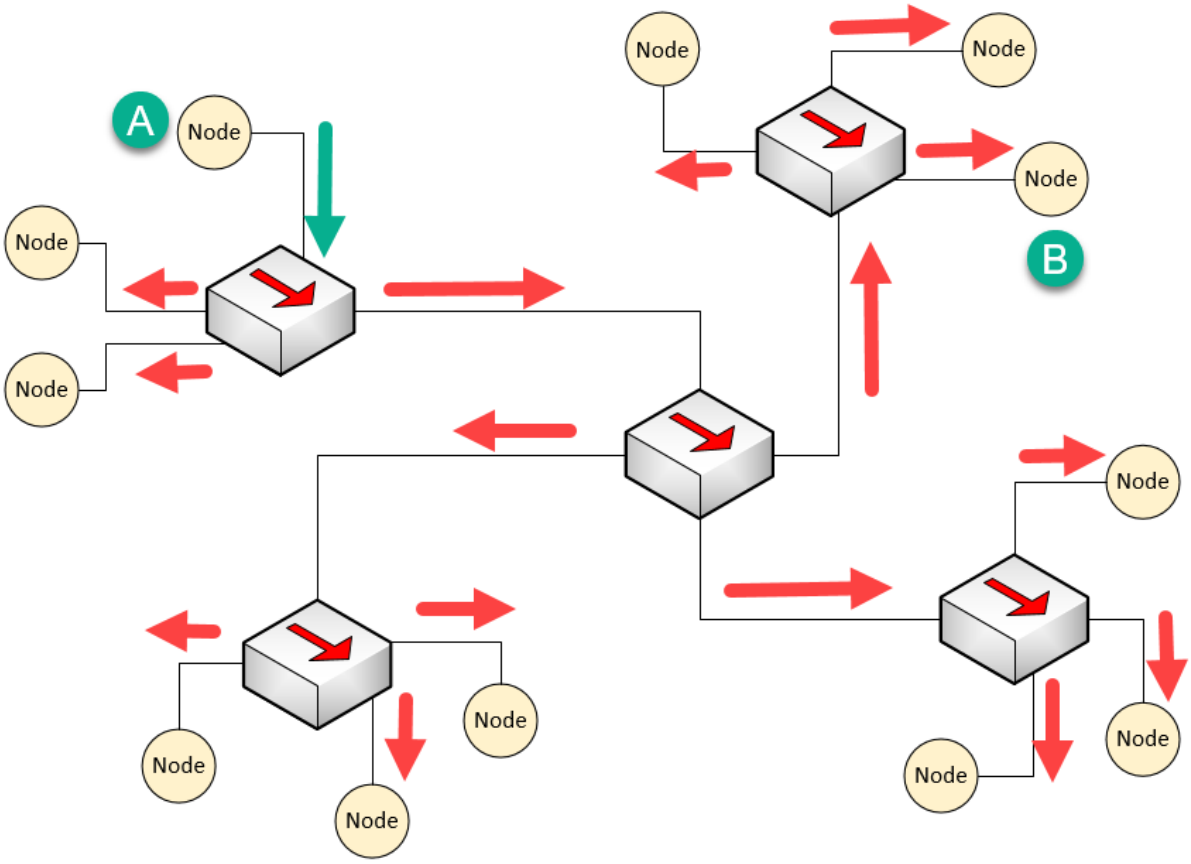
A
Node
Node
Node
Node
Node
Node
Node
B
Node
Node
Node
Node
Node
Node
Node

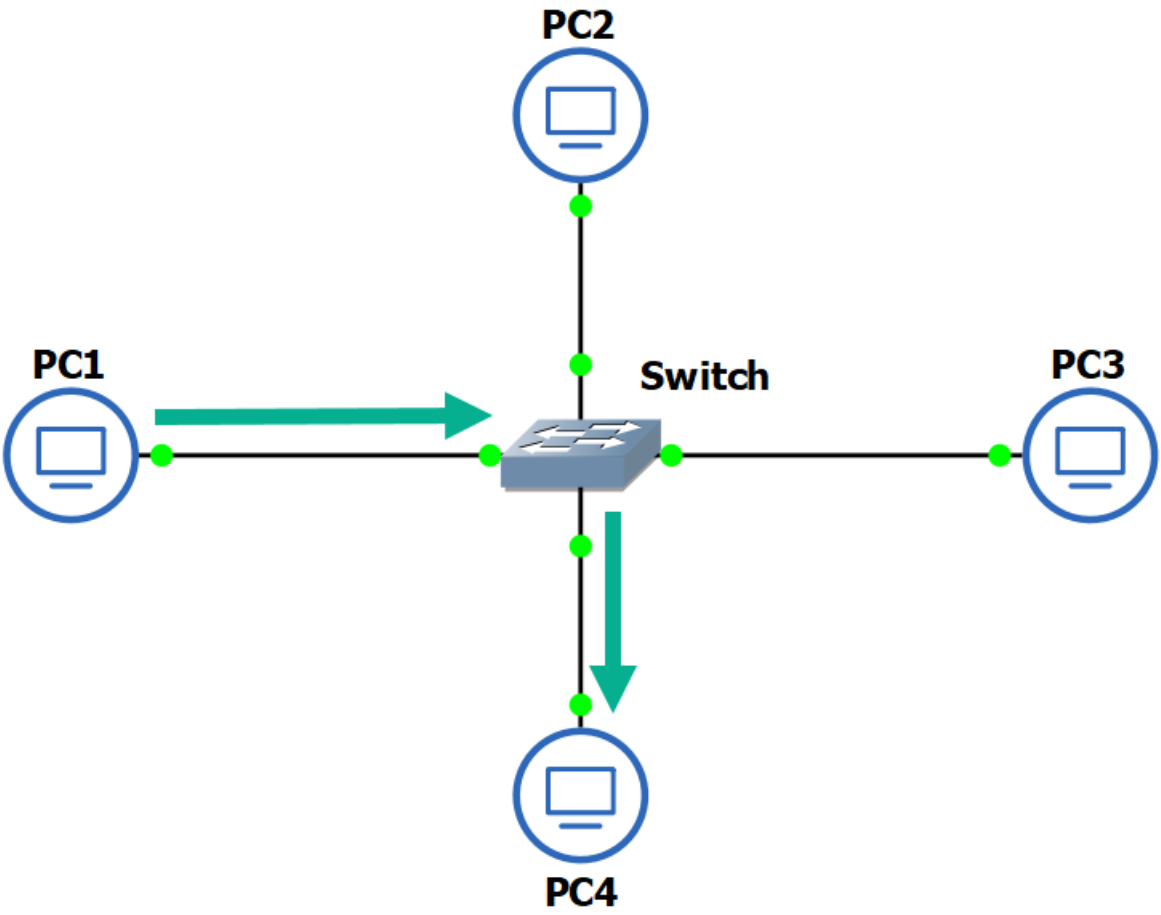
PC2
PC1
Switch
PC3
PC4

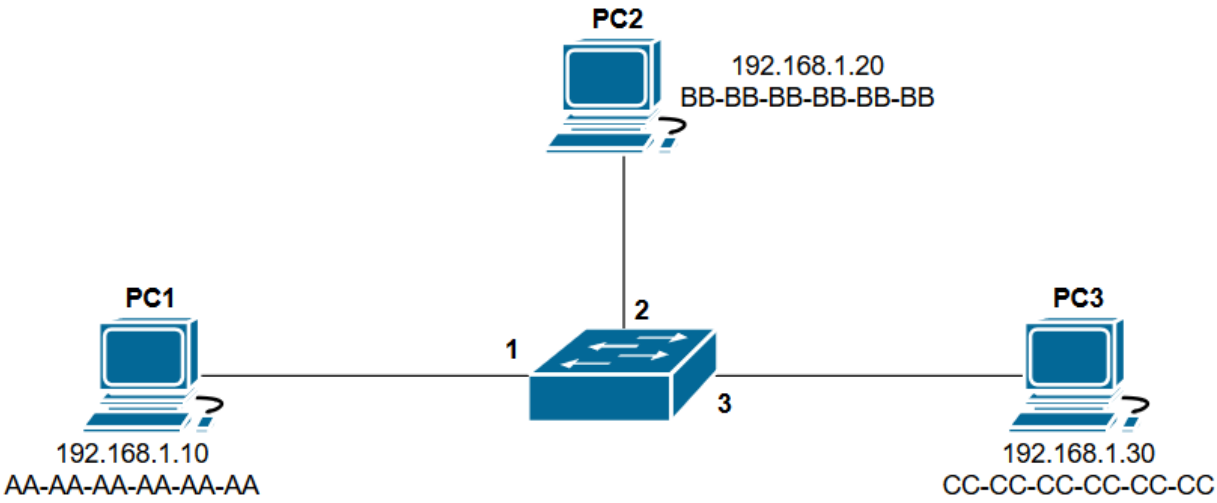
PC2
192.168.1.20
BB-BB-BB-BB-BB-BB
PC1
2
1
3
PC3
192.168.1.10
AA-AA-AA-AA-AA-AA
192.168.1.30
CC-CC-CC-CC-CC-CC

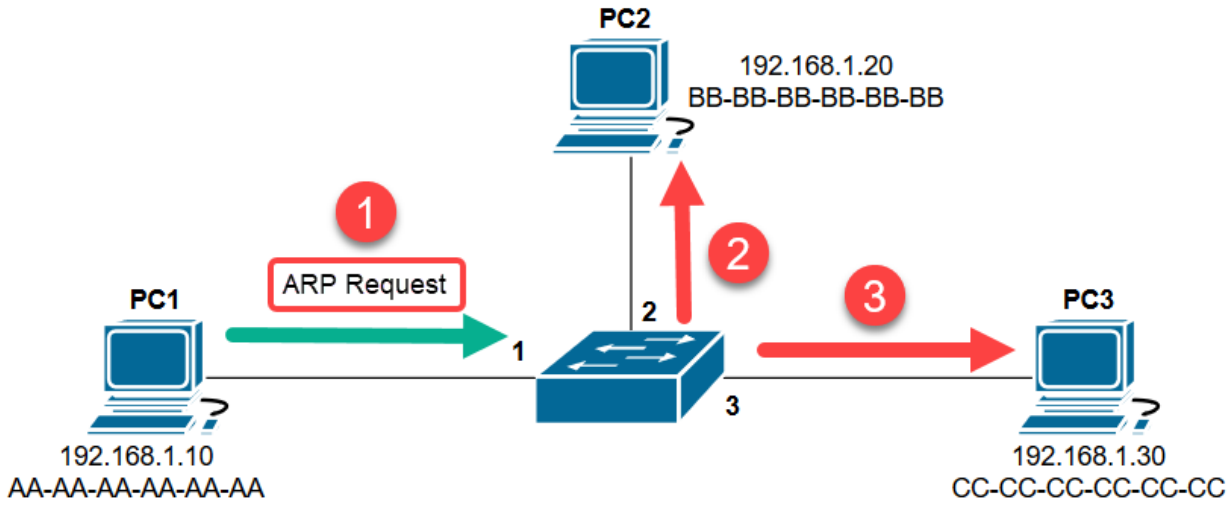

Interface	MAC Address
1	AA-AA-AA-AA-AA-AA
2	
3	

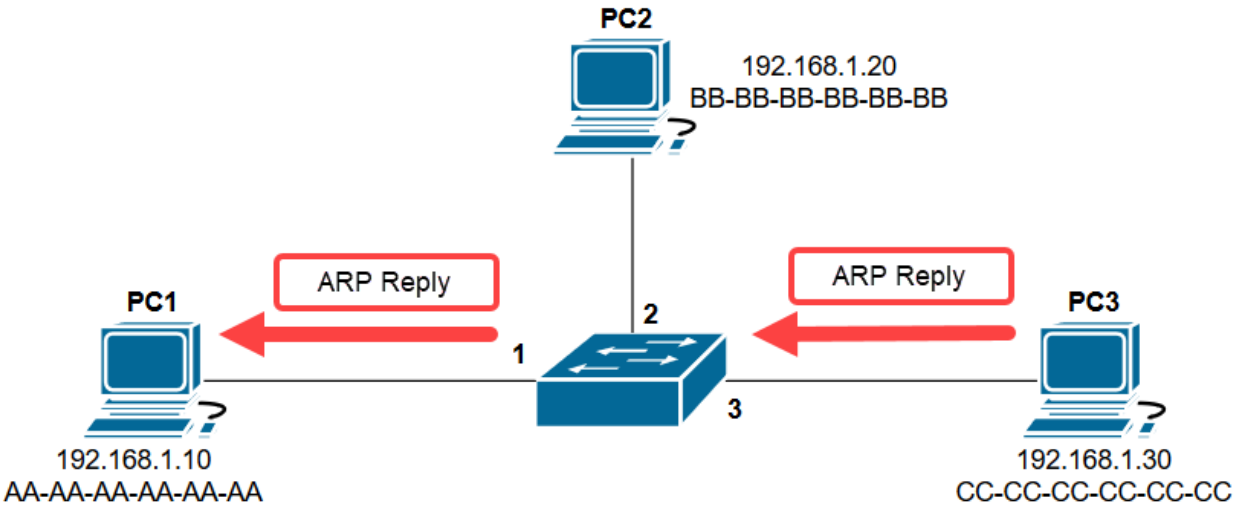

Interface	MAC Address
1	AA-AA-AA-AA-AA-AA
2	
3	CC-CC-CC-CC-CC-CC

```
C:\>arp -a

Interface: 10.10.10.100 --- 0xc
  Internet Address      Physical Address      Type
  10.10.10.10           00-0c-29-7e-37-58     dynamic
  10.10.10.255          ff-ff-ff-ff-ff-ff     static
  224.0.0.22            01-00-5e-00-00-16     static
  224.0.0.252           01-00-5e-00-00-fc     static
  239.255.255.250       01-00-5e-7f-ff-fa     static
```

```
root@kali:~# arp
Address                  HWtype  HWaddress           Flags Mask            Iface
10.10.10.100             ether   00:0c:29:a0:b0:6a   C                     eth0
_gateway                 ether   00:0c:29:2b:29:7f   C                     eth0
root@kali:~#
```

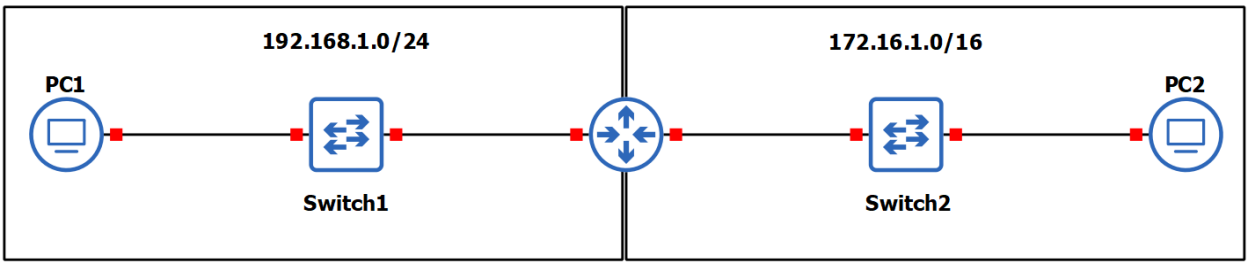

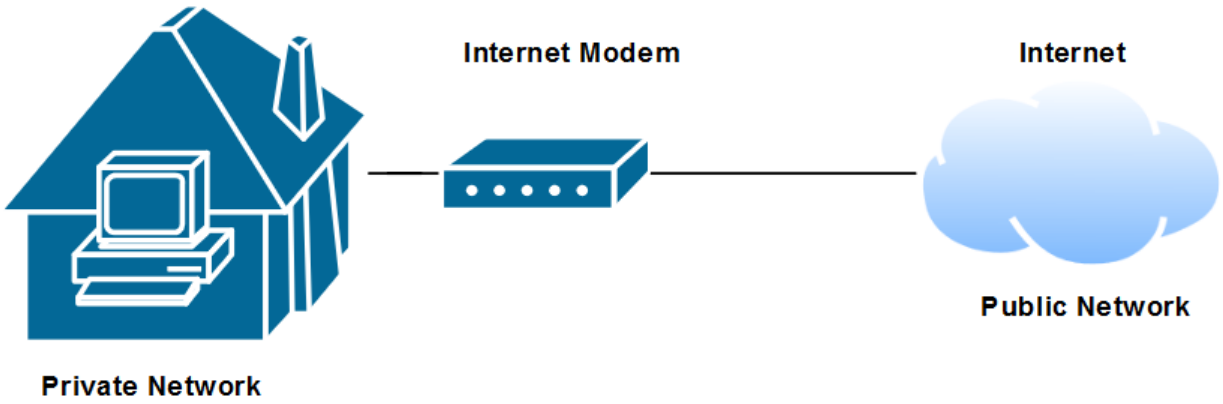

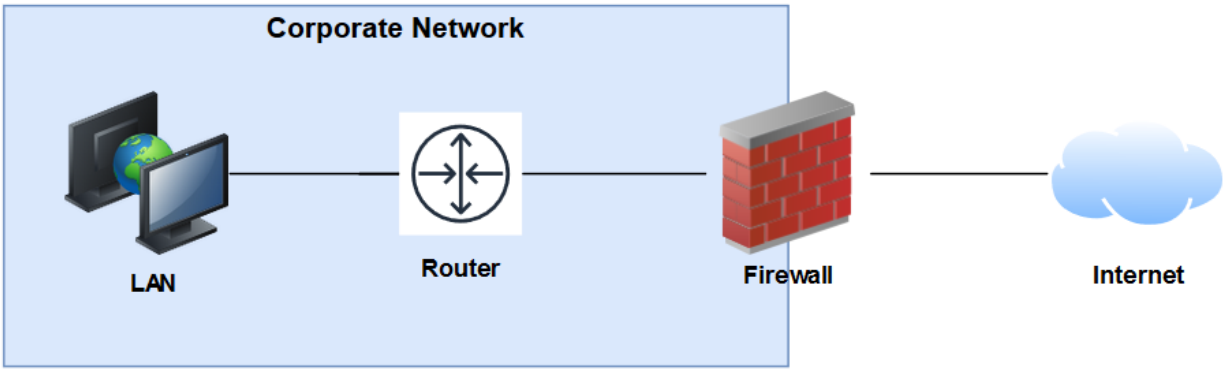

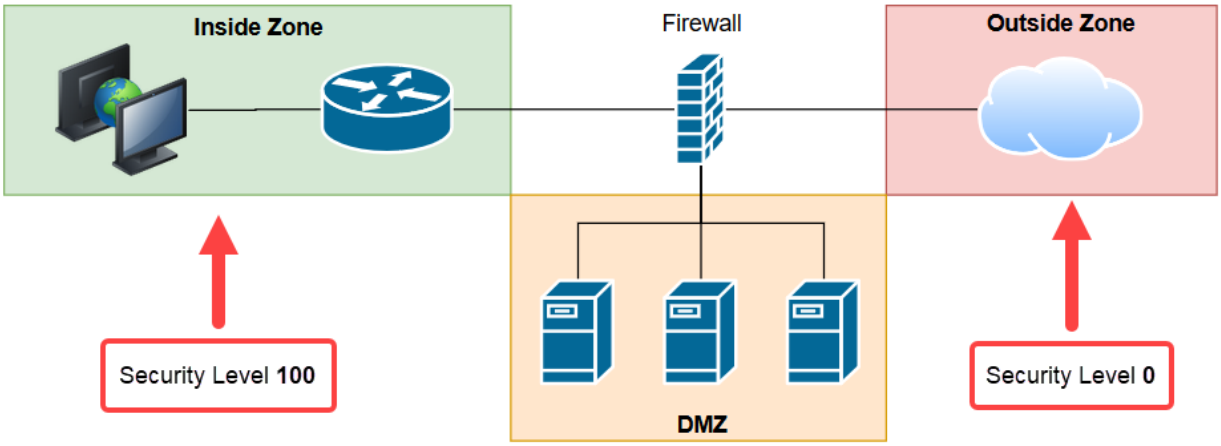
Inside Zone
Firewall
Outside Zone
Security Level 100
DMZ
Security Level 0

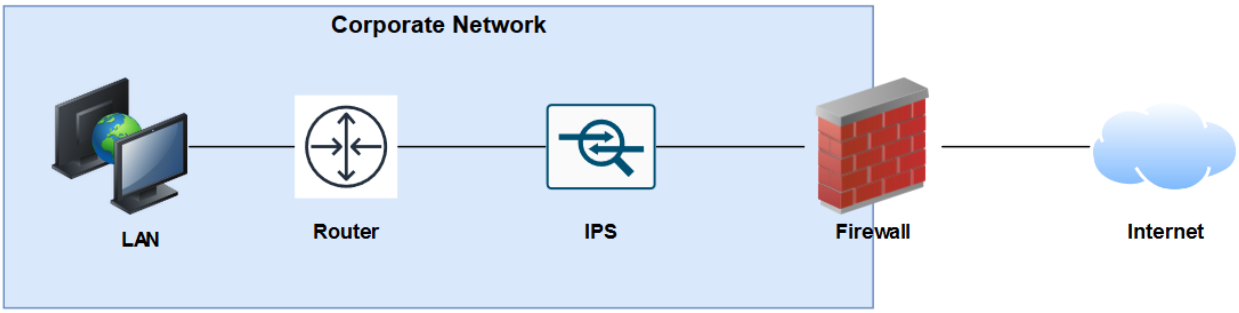
Corporate Network
LAN
Router
IPS
Firewall
Internet

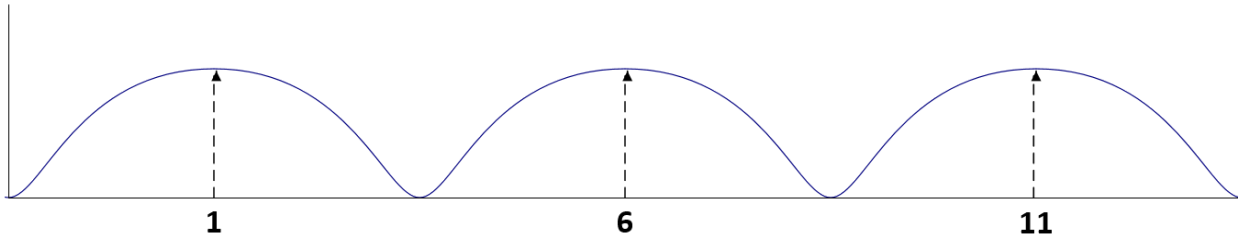
1
6
11

Daisy Chain

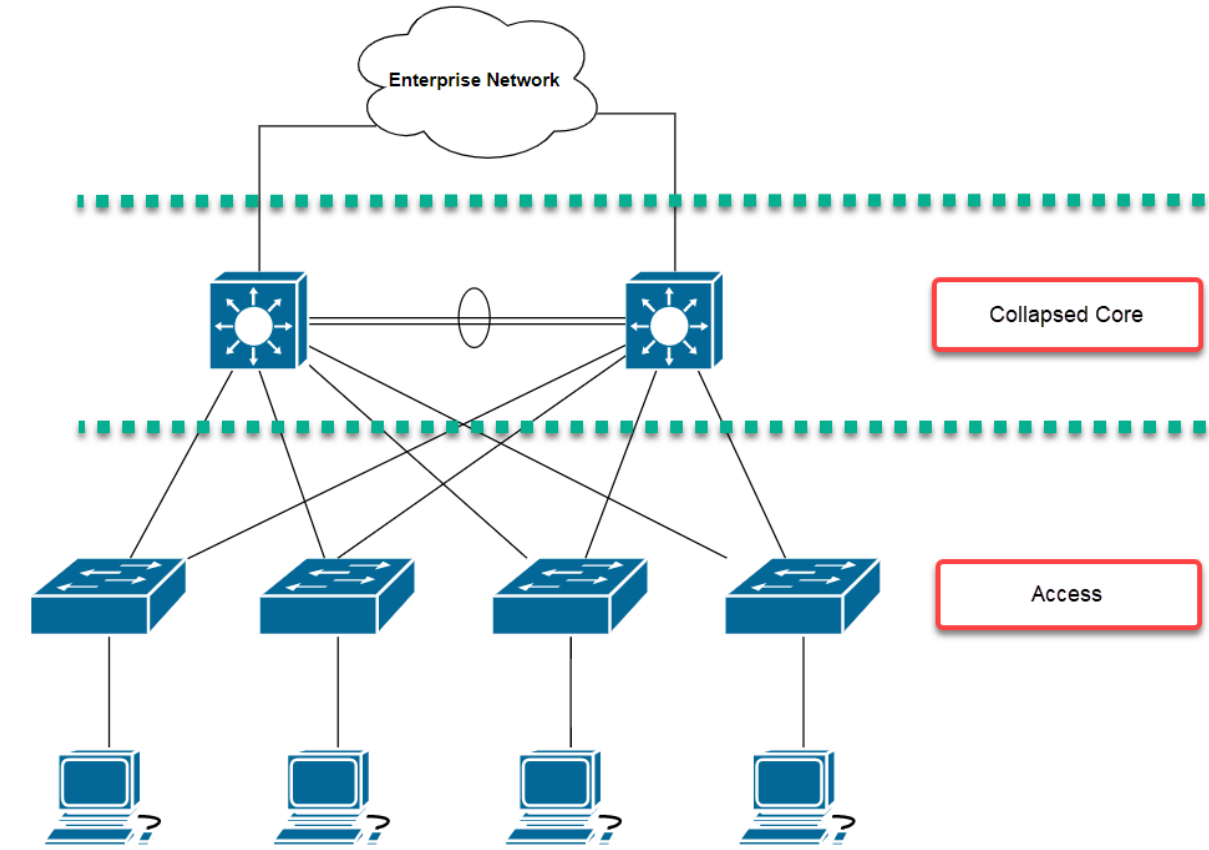
Enterprise Network
Collapsed Core
Access

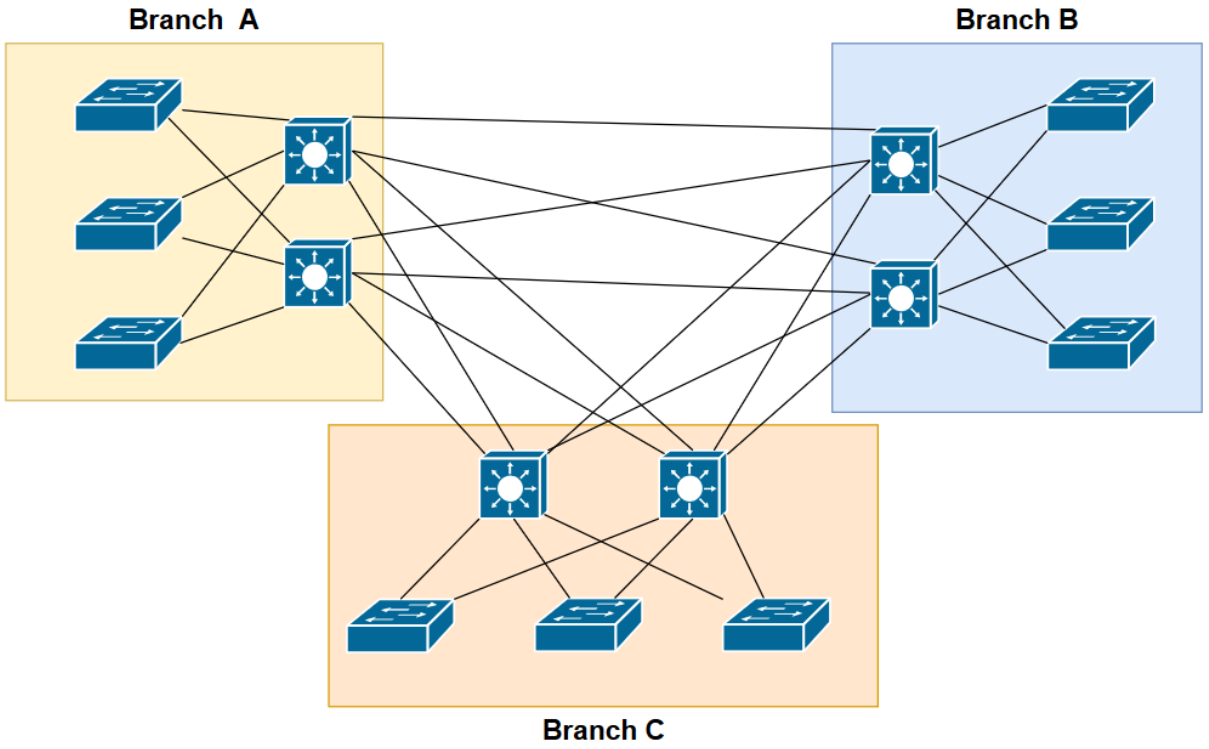
Branch A
Branch B
Branch C

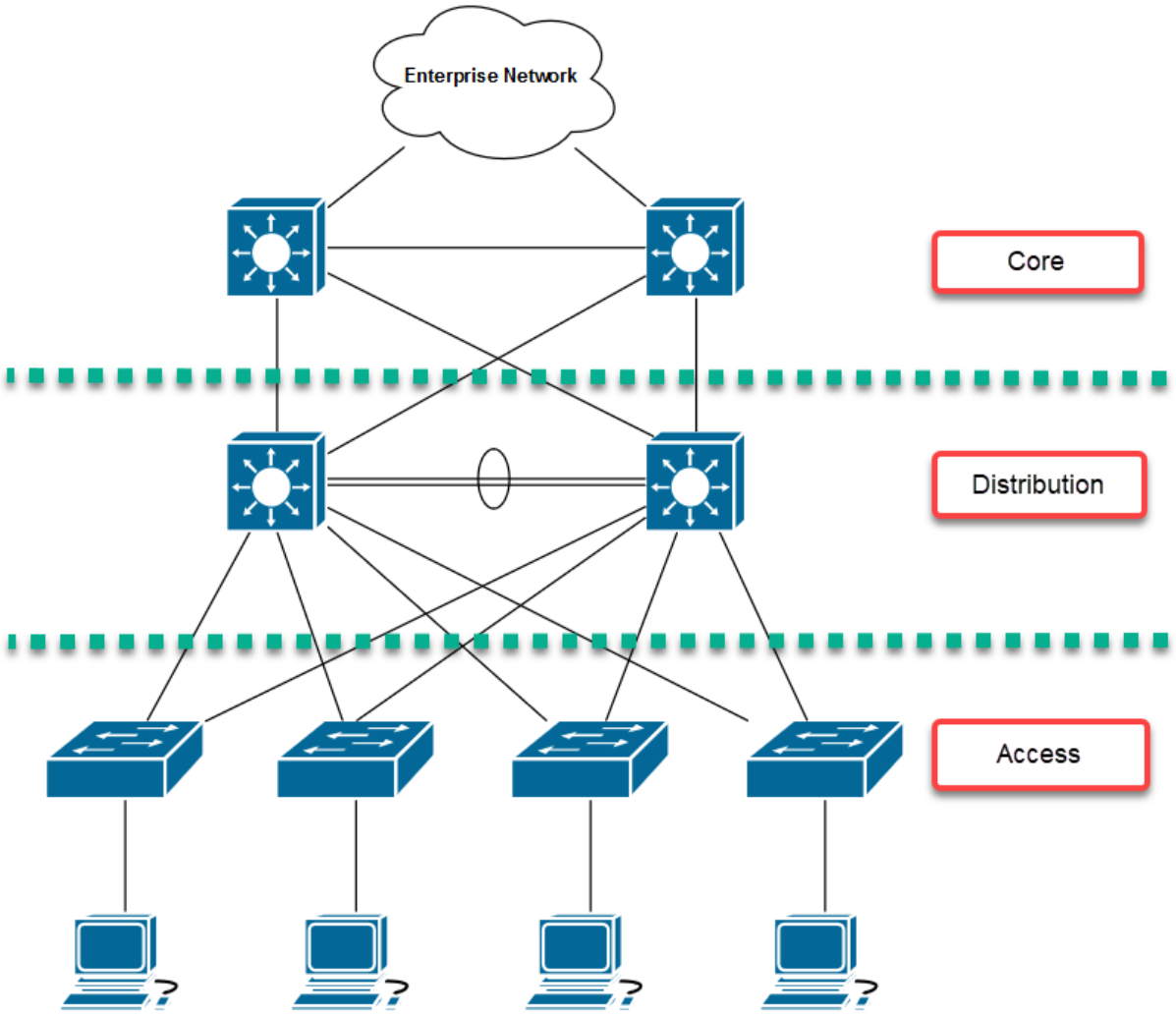
Enterprise Network
Core
Distribution
Access

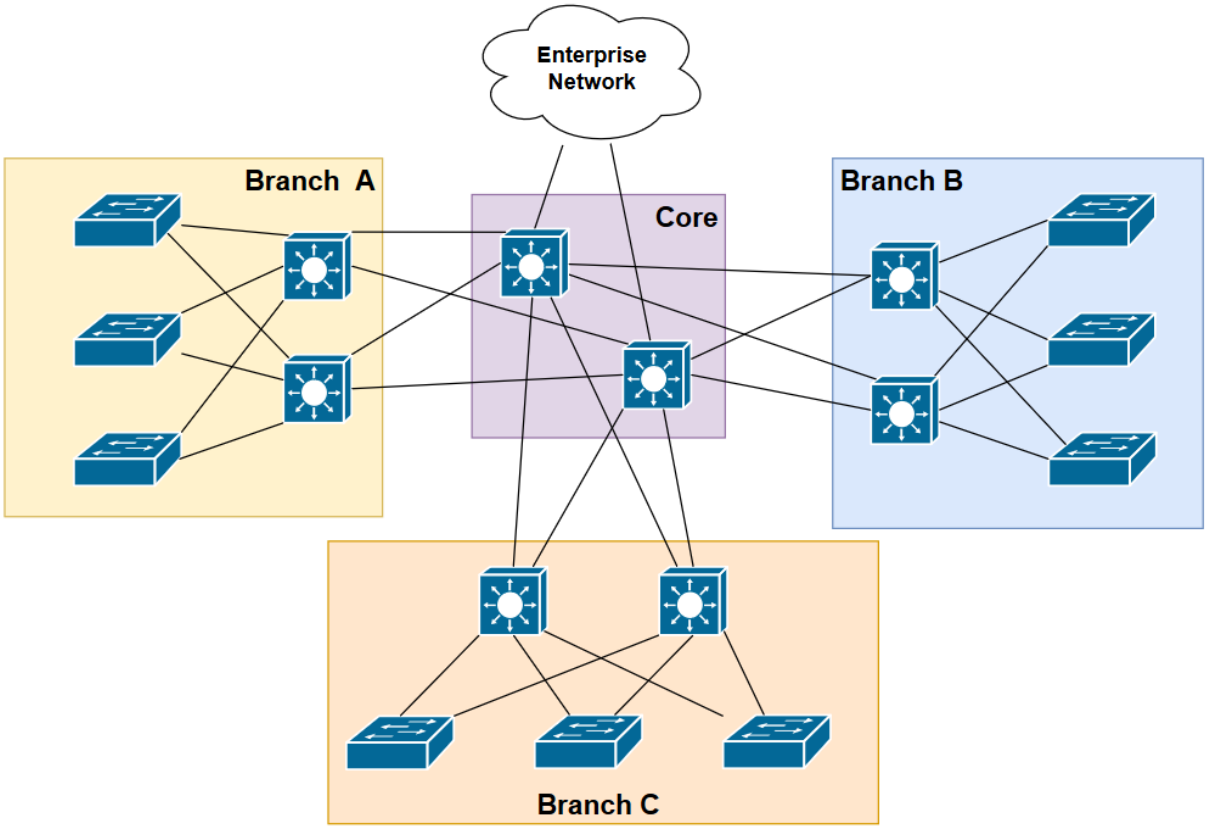
Enterprise Network
Branch A
Core
Branch B
Branch C

Chapter 2: Getting Started with Cisco IOS Devices

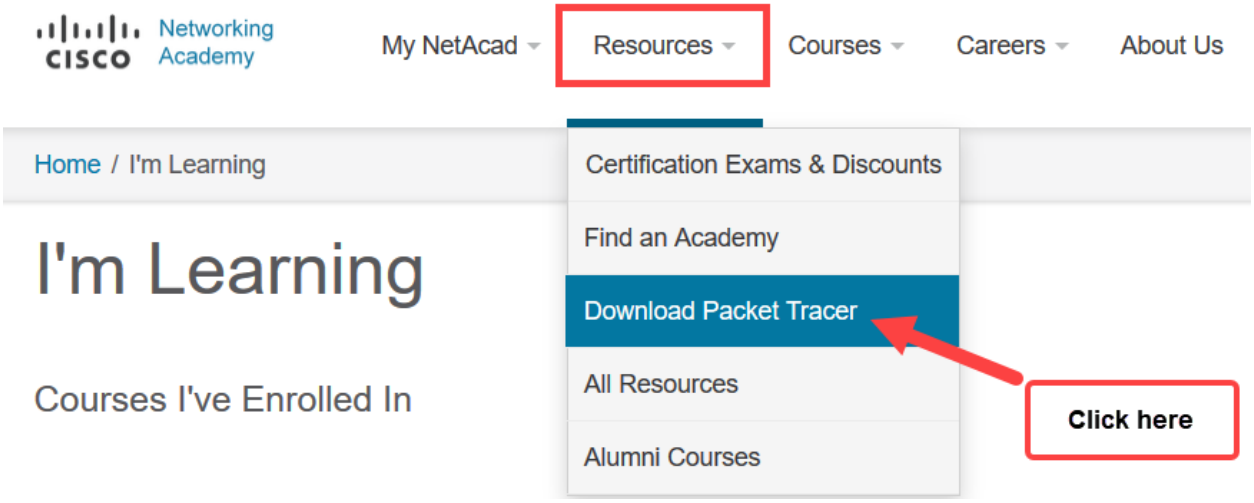

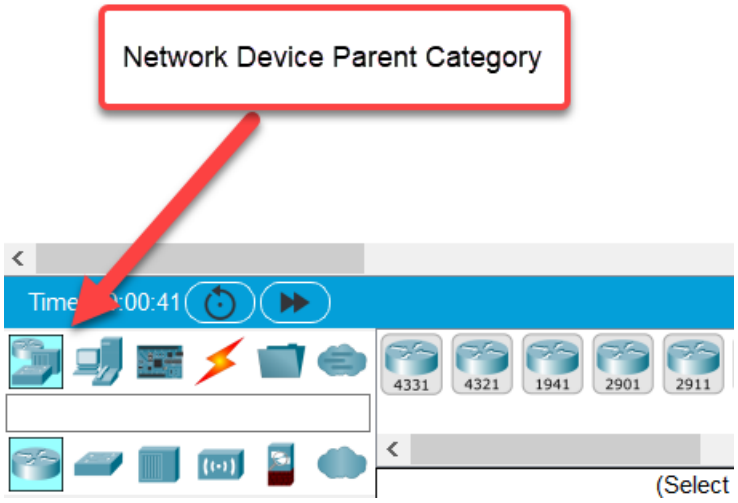

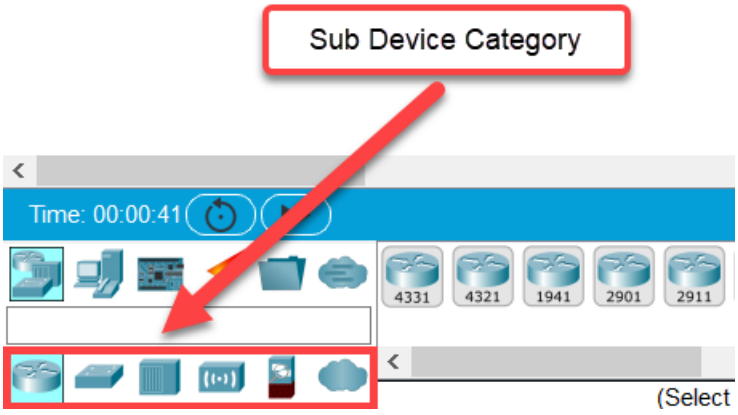

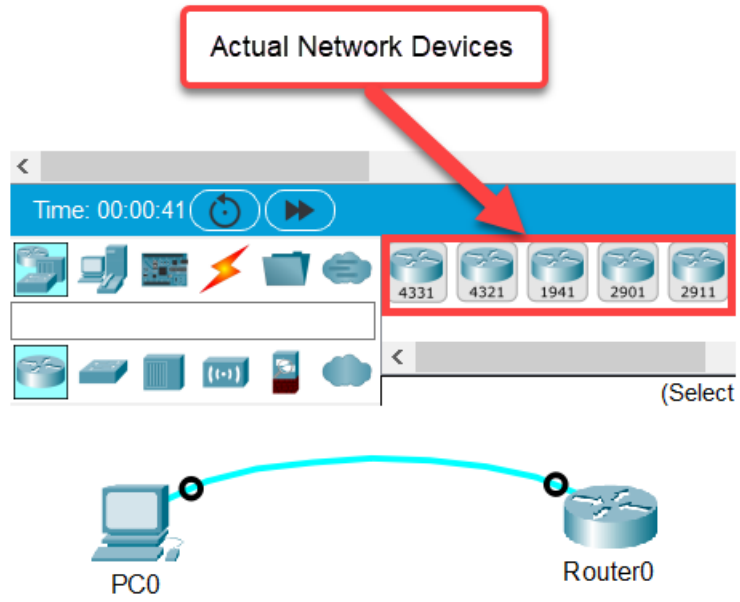
Actual Network Devices
Time: 00:00:41
4331
4321
1941
2901
2911
(Select
PC0
Router0

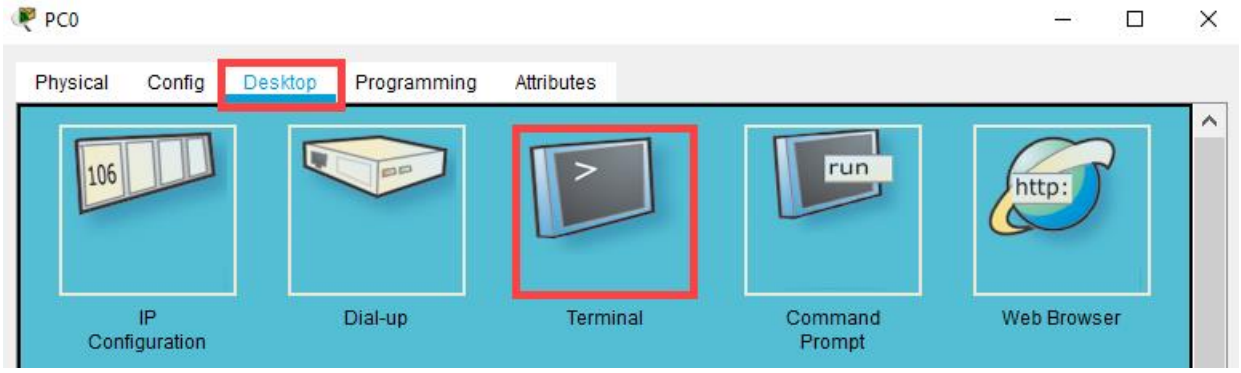
PC0
Physical
Config
Desktop
Programming
Attributes
106
IP Configuration
Dial-up
Terminal
run
Command Prompt
http:
Web Browser

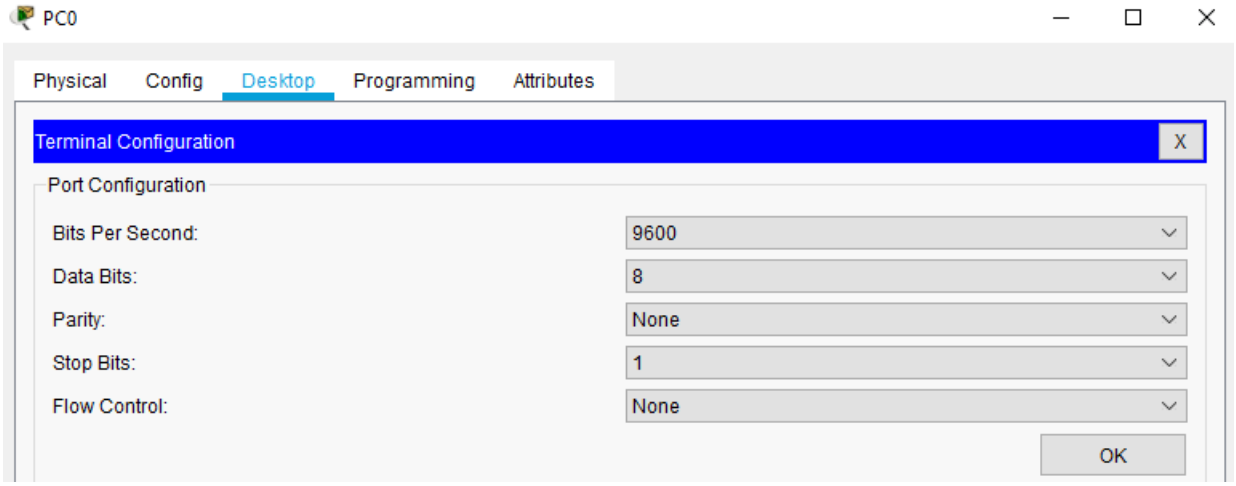
PC0
Physical
Config
Desktop
Programming
Attributes
Terminal Configuration
X
Port Configuration
Bits Per Second:
9600
Data Bits:
8
Parity:
None
Stop Bits:
1
Flow Control:
None
OK

```
Cisco IOS Software, C2900 Software (C2900-UNIVERSALK9-M), Version 15.1(4)M5, RELEASE SOFTWARE (fc2)Technical Support: http://
www.cisco.com/techsupport
Copyright (c) 1986-2007 by Cisco Systems, Inc.
Compiled Wed 18-Jul-07 04:52 by pt_team
Image text-base: 0x2100F918, data-base: 0x24729040

This product contains cryptographic features and is subject to United
States and local country laws governing import, export, transfer and
use. Delivery of Cisco cryptographic products does not imply
third-party authority to import, export, distribute or use encryption.
Importers, exporters, distributors and users are responsible for
compliance with U.S. and local country laws. By using this product you
agree to comply with applicable laws and regulations. If you are unable
to comply with U.S. and local laws, return this product immediately.

A summary of U.S. laws governing Cisco cryptographic products may be found at:
http://www.cisco.com/wwl/export/crypto/tool/stqrg.html

If you require further assistance please contact us by sending email to
export@cisco.com.

Cisco CISCO2911/K9 (revision 1.0) with 491520K/32768K bytes of memory.
Processor board ID FTX152400KS
3 Gigabit Ethernet interfaces
DRAM configuration is 64 bits wide with parity disabled.
255K bytes of non-volatile configuration memory.
249856K bytes of ATA System CompactFlash 0 (Read/Write)


         --- System Configuration Dialog ---

Would you like to enter the initial configuration dialog? [yes/no]: no
```

Type "*no*" and hit Enter twice on your keyboard

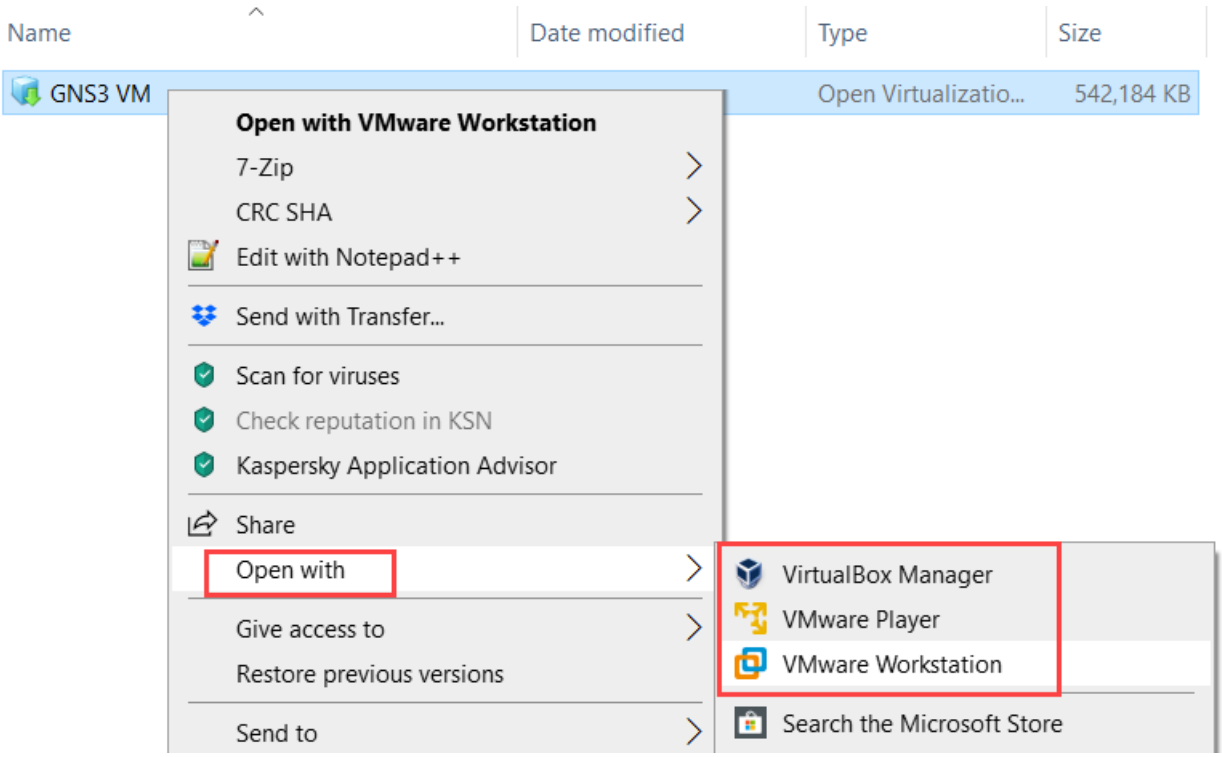
Name
Date modified
Type
Size
GNS3 VM
Open Virtualizatio...
542,184 KB
Open with VMware Workstation
7-Zip
CRC SHA
Edit with Notepad++
Send with Transfer...
Scan for viruses
Check reputation in KSN
Kaspersky Application Advisor
Share
Open with
Give access to
Restore previous versions
Send to
VirtualBox Manager
VMware Player
VMware Workstation
Search the Microsoft Store

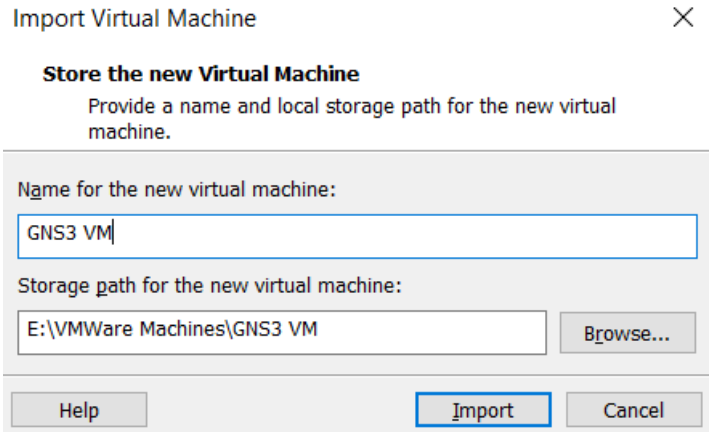
Import Virtual Machine
Store the new Virtual Machine
Provide a name and local storage path for the new virtual machine.
Name for the new virtual machine:
GNS3 VM
Storage path for the new virtual machine:
E:\VMWare Machines\GNS3 VM
Browse...
Help
Import
Cancel

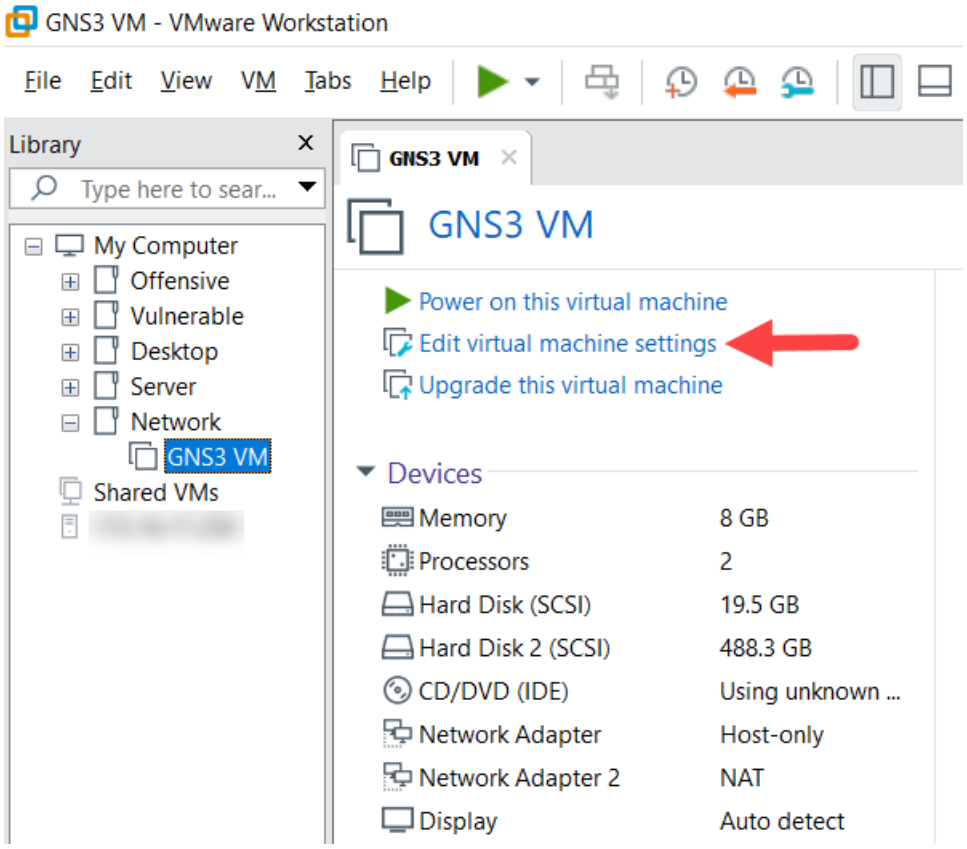
GNS3 VM - VMware Workstation
File Edit View VM Tabs Help
Library
Type here to sear...
My Computer
Offensive
Vulnerable
Desktop
Server
Network
GNS3 VM
Shared VMs
GNS3 VM
GNS3 VM
Power on this virtual machine
Edit virtual machine settings
Upgrade this virtual machine
Devices
Memory 8 GB
Processors 2
Hard Disk (SCSI) 19.5 GB
Hard Disk 2 (SCSI) 488.3 GB
CD/DVD (IDE) Using unknown ...
Network Adapter Host-only
Network Adapter 2 NAT
Display Auto detect

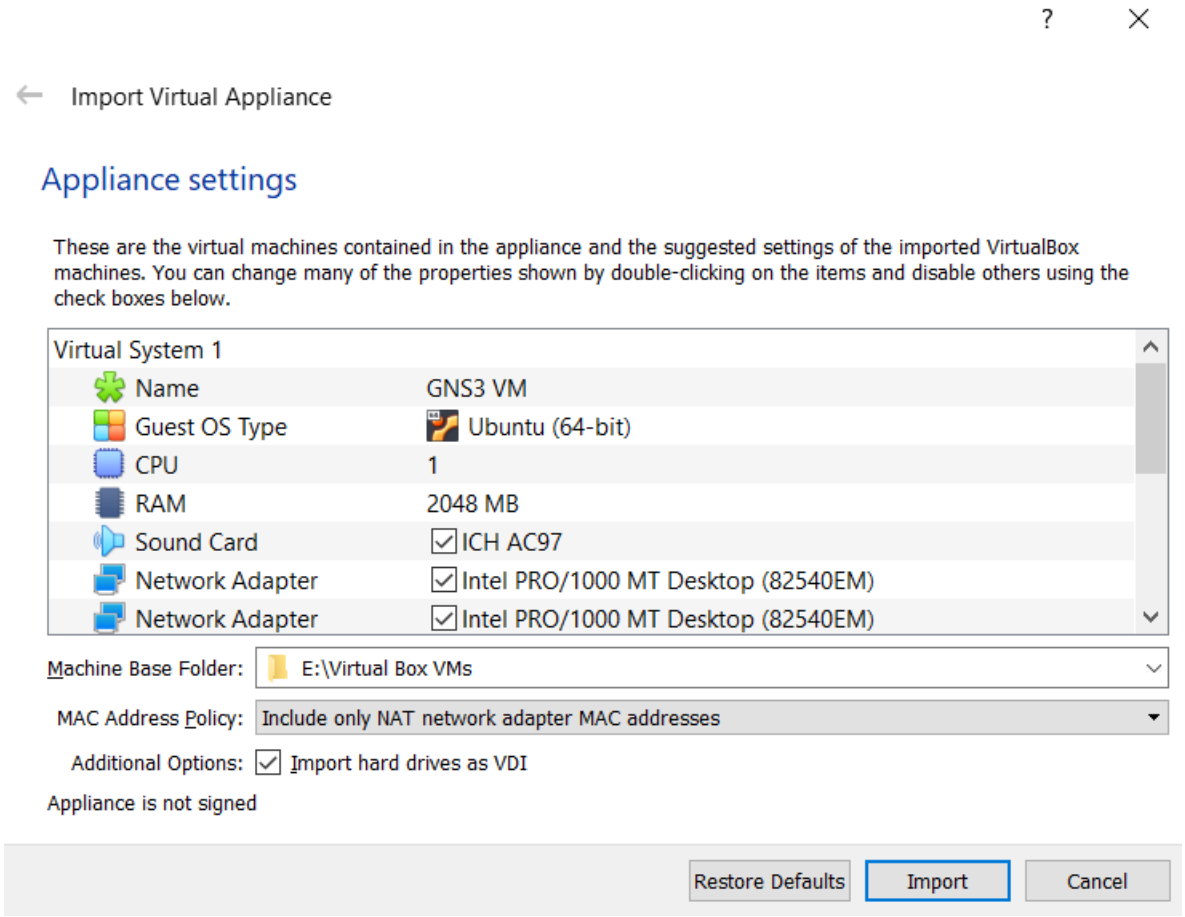
Import Virtual Appliance
Appliance settings
These are the virtual machines contained in the appliance and the suggested settings of the imported VirtualBox machines. You can change many of the properties shown by double-clicking on the items and disable others using the check boxes below.
Virtual System 1
Name
GNS3 VM
Guest OS Type
Ubuntu (64-bit)
CPU
1
RAM
2048 MB
Sound Card
ICH AC97
Network Adapter
Intel PRO/1000 MT Desktop (82540EM)
Network Adapter
Intel PRO/1000 MT Desktop (82540EM)
Machine Base Folder:
E:\Virtual Box VMs
MAC Address Policy:
Include only NAT network adapter MAC addresses
Additional Options:
Import hard drives as VDI
Appliance is not signed
Restore Defaults
Import
Cancel

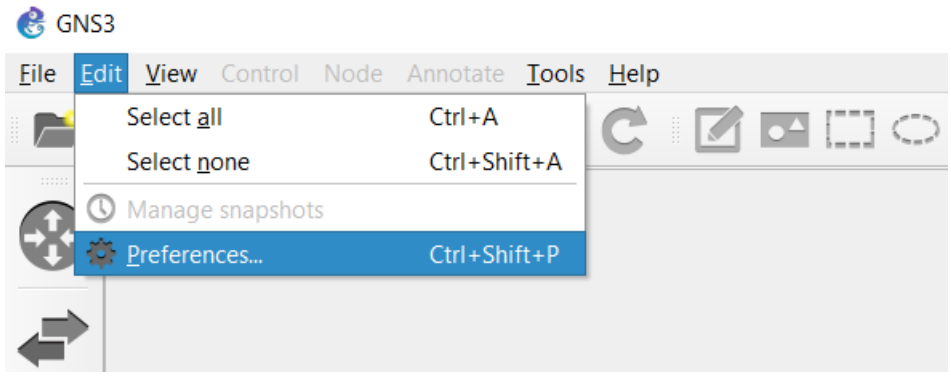
GNS3
File
Edit
View
Control
Node
Annotate
Tools
Help
Select all
Ctrl+A
Select none
Ctrl+Shift+A
Manage snapshots
Preferences...
Ctrl+Shift+P

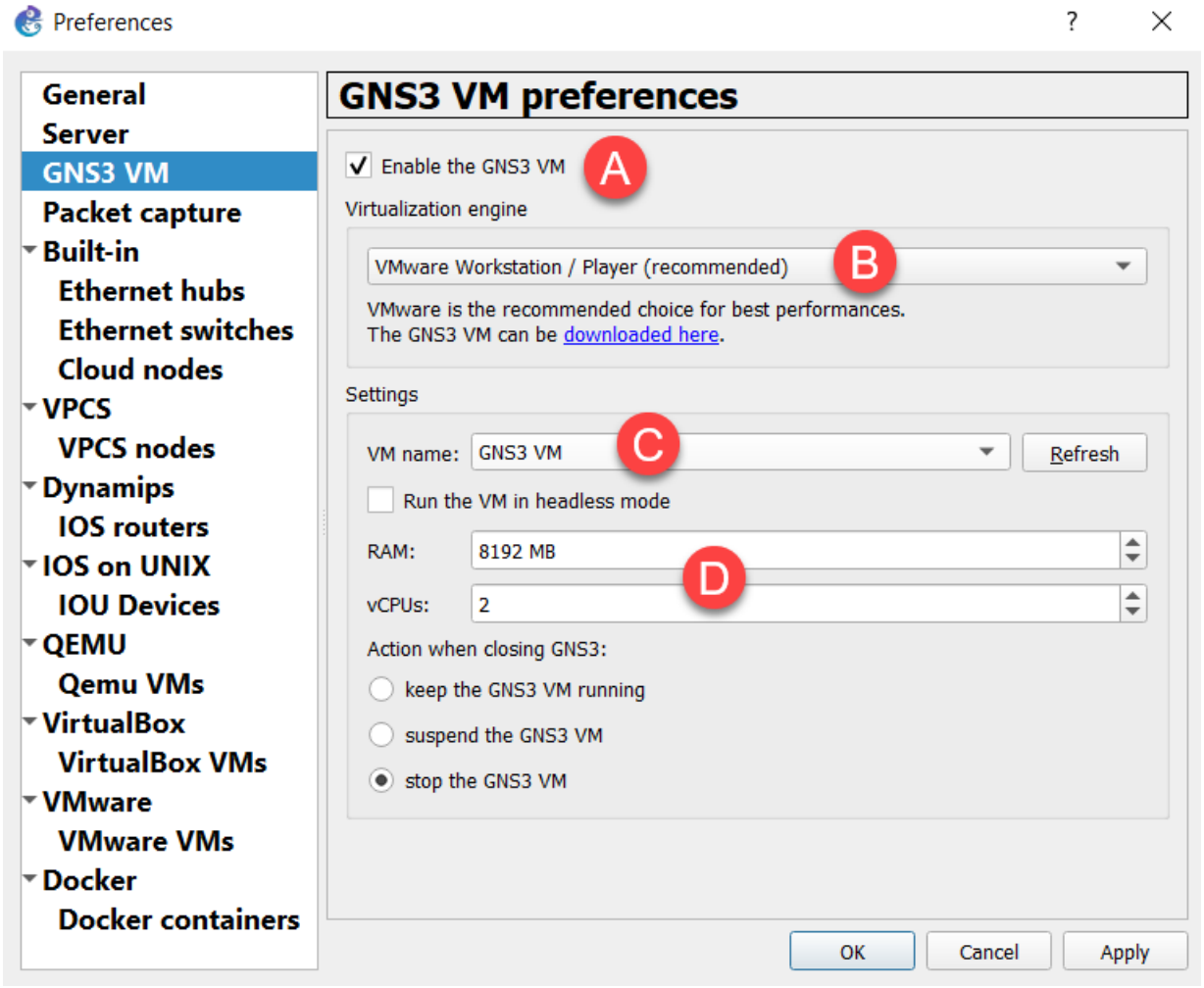
Preferences
General
Server
GNS3 VM
Packet capture
Built-in
Ethernet hubs
Ethernet switches
Cloud nodes
VPCS
VPCS nodes
Dynamips
IOS routers
IOS on UNIX
IOU Devices
QEMU
Qemu VMs
VirtualBox
VirtualBox VMs
VMware
VMware VMs
Docker
Docker containers
GNS3 VM preferences
Enable the GNS3 VM
A
Virtualization engine
VMware Workstation / Player (recommended)
B
VMware is the recommended choice for best performances.
The GNS3 VM can be downloaded here.
Settings
VM name:
GNS3 VM
C
Refresh
Run the VM in headless mode
RAM:
8192 MB
D
vCPUs:
2
Action when closing GNS3:
keep the GNS3 VM running
suspend the GNS3 VM
stop the GNS3 VM
OK
Cancel
Apply

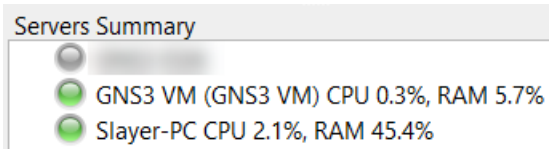
Servers Summary
GNS3 VM (GNS3 VM) CPU 0.3%, RAM 5.7%
Slayer-PC CPU 2.1%, RAM 45.4%

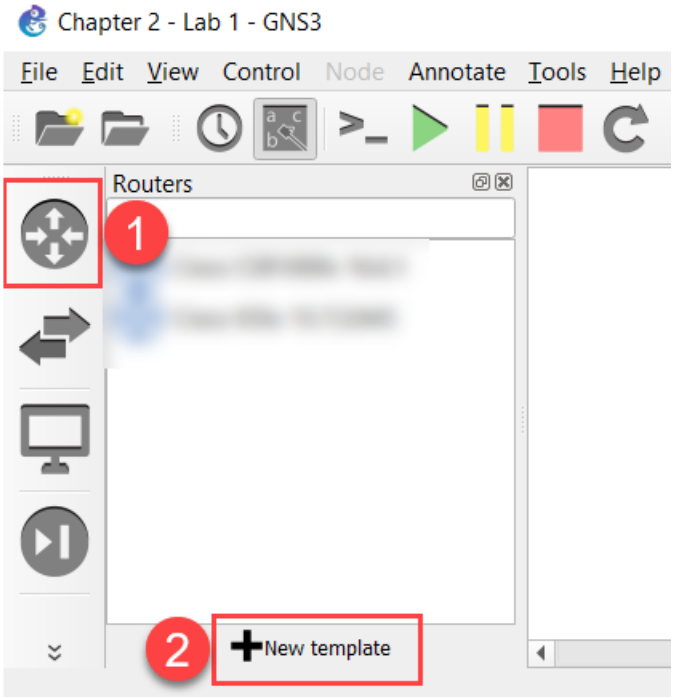
Chapter 2 - Lab 1 - GNS3
File Edit View Control Node Annotate Tools Help
Routers
1
2
New template

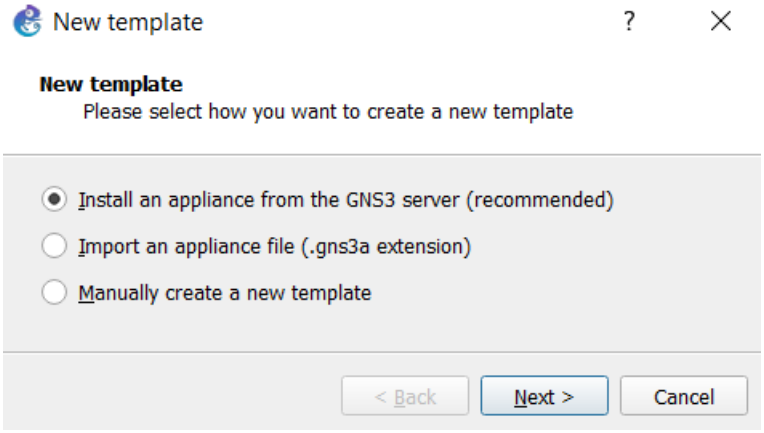
New template
New template
Please select how you want to create a new template
Install an appliance from the GNS3 server (recommended)
Import an appliance file (.gns3a extension)
Manually create a new template
< Back
Next >
Cancel

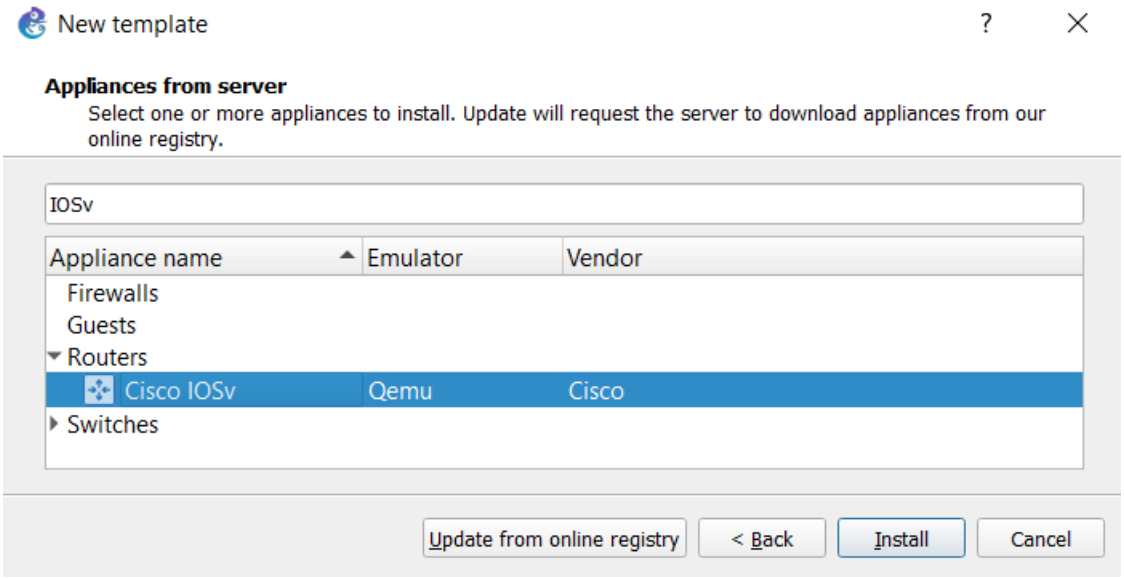
New template
Appliances from server
Select one or more appliances to install. Update will request the server to download appliances from our online registry.
IOSv
Appliance name
Emulator
Vendor
Firewalls
Guests
Routers
Cisco IOSv
Qemu
Cisco
Switches
Update from online registry
< Back
Install
Cancel

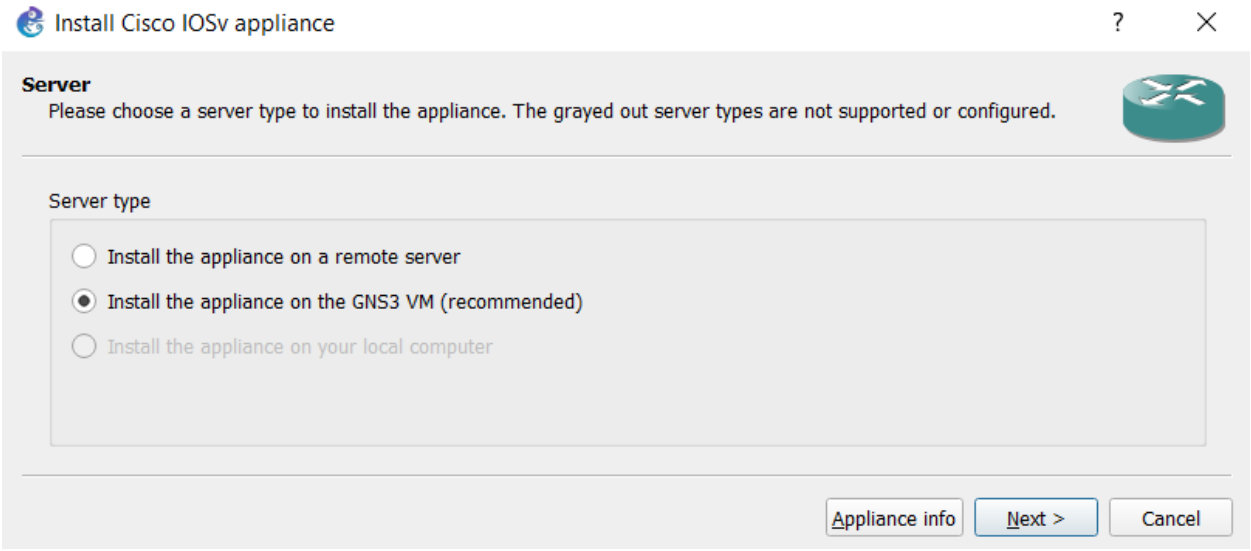
Install Cisco IOSv appliance
Server
Please choose a server type to install the appliance. The grayed out server types are not supported or configured.
Server type
Install the appliance on a remote server
Install the appliance on the GNS3 VM (recommended)
Install the appliance on your local computer
Appliance info
Next >
Cancel

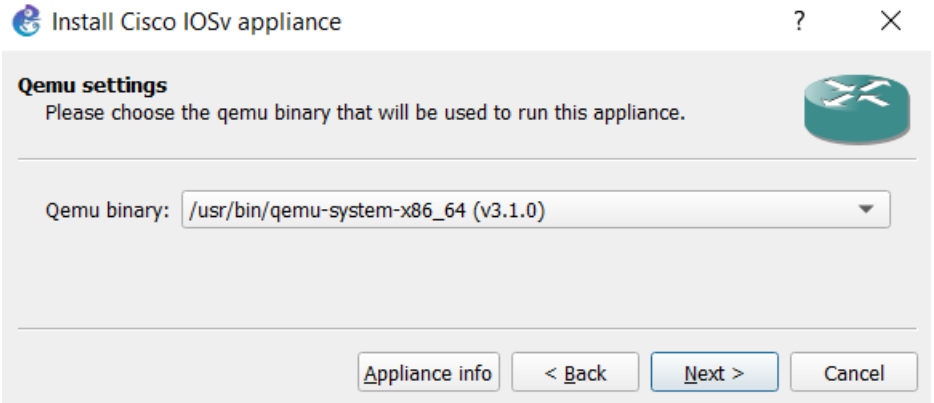
Install Cisco IOSv appliance
Qemu settings
Please choose the qemu binary that will be used to run this appliance.
Qemu binary:
/usr/bin/qemu-system-x86_64 (v3.1.0)
Appliance info
< Back
Next >
Cancel

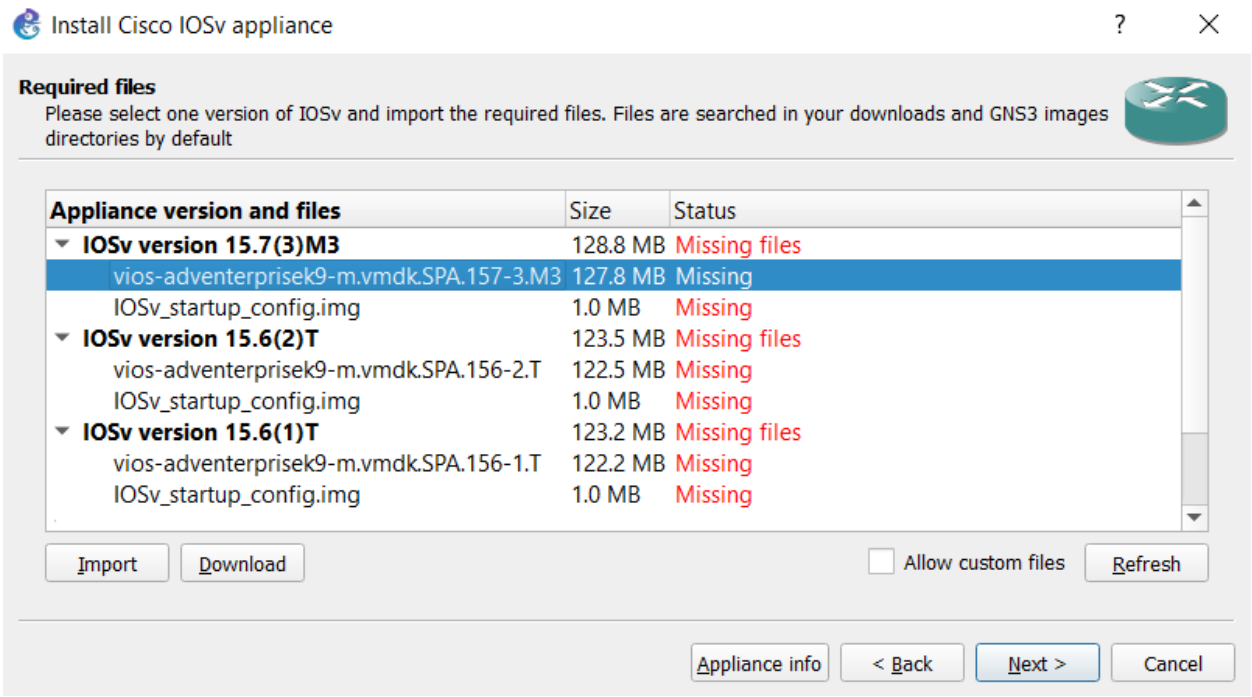
Install Cisco IOSv appliance
Required files
Please select one version of IOSv and import the required files. Files are searched in your downloads and GNS3 images directories by default
Appliance version and files
Size
Status
IOSv version 15.7(3)M3 128.8 MB Missing files
vios-adventerprisek9-m.vmdk.SPA.157-3.M3 127.8 MB Missing
IOSv_startup_config.img 1.0 MB Missing
IOSv version 15.6(2)T 123.5 MB Missing files
vios-adventerprisek9-m.vmdk.SPA.156-2.T 122.5 MB Missing
IOSv_startup_config.img 1.0 MB Missing
IOSv version 15.6(1)T 123.2 MB Missing files
vios-adventerprisek9-m.vmdk.SPA.156-1.T 122.2 MB Missing
IOSv_startup_config.img 1.0 MB Missing
Import
Download
Allow custom files
Refresh
Appliance info
< Back
Next >
Cancel

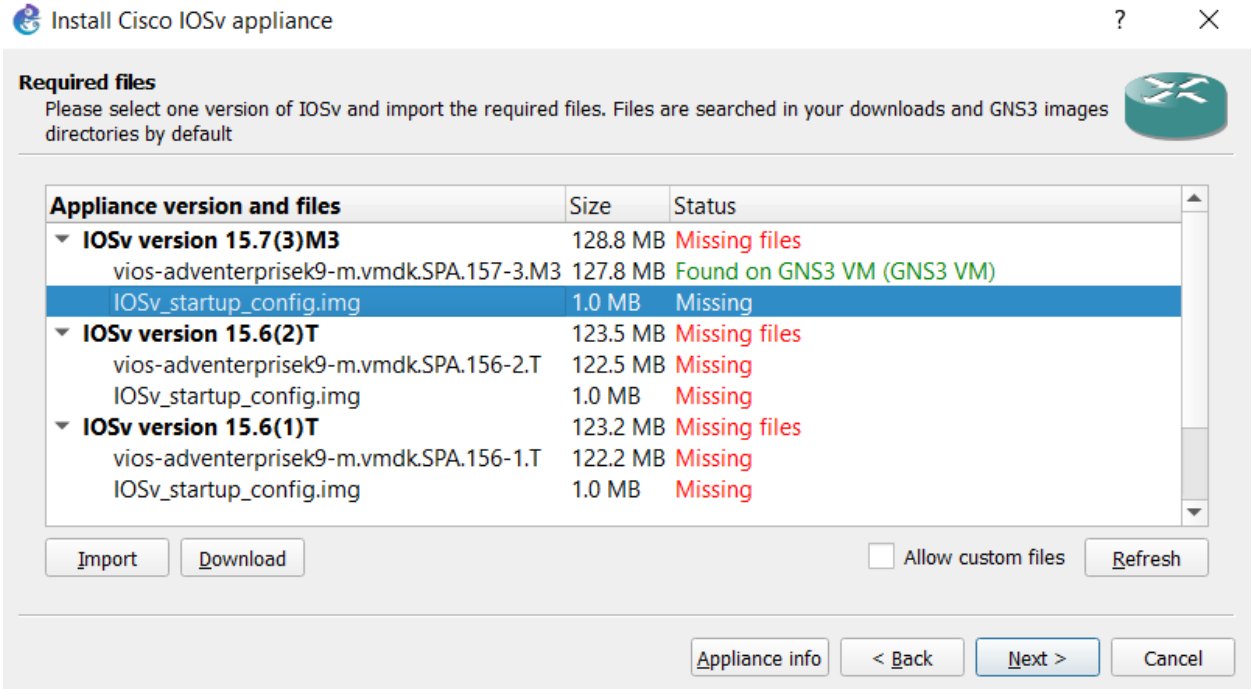
Install Cisco IOSv appliance
Required files
Please select one version of IOSv and import the required files. Files are searched in your downloads and GNS3 images directories by default
Appliance version and files
Size
Status
IOSv version 15.7(3)M3 128.8 MB Missing files
vios-adventerprisek9-m.vmdk.SPA.157-3.M3 127.8 MB Found on GNS3 VM (GNS3 VM)
IOSv_startup_config.img 1.0 MB Missing
IOSv version 15.6(2)T 123.5 MB Missing files
vios-adventerprisek9-m.vmdk.SPA.156-2.T 122.5 MB Missing
IOSv_startup_config.img 1.0 MB Missing
IOSv version 15.6(1)T 123.2 MB Missing files
vios-adventerprisek9-m.vmdk.SPA.156-1.T 122.2 MB Missing
IOSv_startup_config.img 1.0 MB Missing
Import
Download
Allow custom files
Refresh
Appliance info
< Back
Next >
Cancel

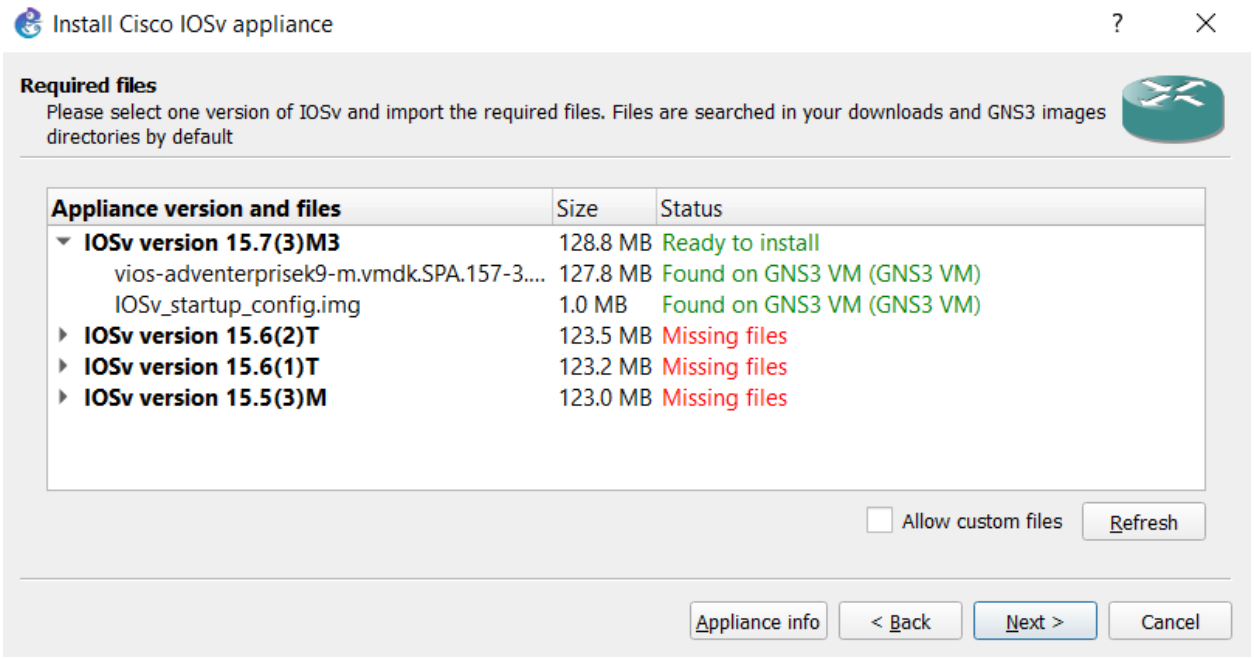
Install Cisco IOSv appliance
Required files
Please select one version of IOSv and import the required files. Files are searched in your downloads and GNS3 images directories by default
Appliance version and files
Size
Status
IOSv version 15.7(3)M3
128.8 MB
Ready to install
vios-adventerprisek9-m.vmdk.SPA.157-3....
127.8 MB
Found on GNS3 VM (GNS3 VM)
IOSv_startup_config.img
1.0 MB
Found on GNS3 VM (GNS3 VM)
IOSv version 15.6(2)T
123.5 MB
Missing files
IOSv version 15.6(1)T
123.2 MB
Missing files
IOSv version 15.5(3)M
123.0 MB
Missing files
Allow custom files
Refresh
Appliance info
< Back
Next >
Cancel

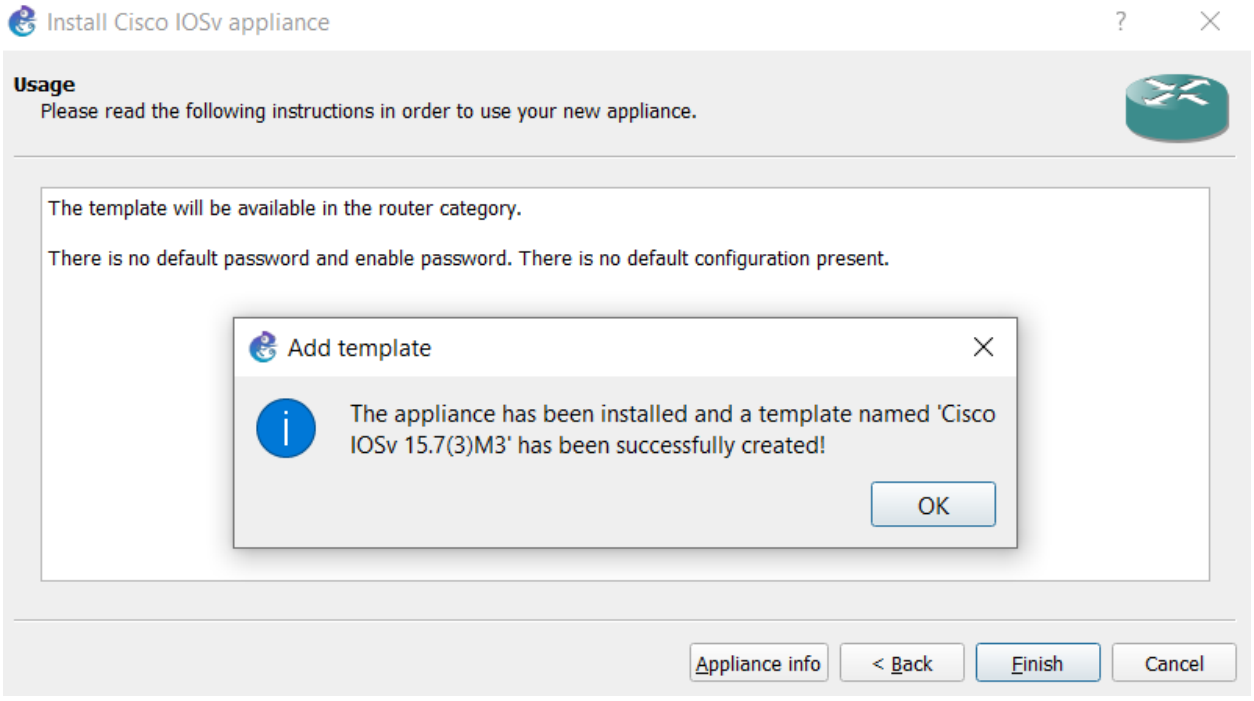
Install Cisco IOSv appliance
Usage
Please read the following instructions in order to use your new appliance.
The template will be available in the router category.
There is no default password and enable password. There is no default configuration present.
Add template
The appliance has been installed and a template named 'Cisco IOSv 15.7(3)M3' has been successfully created!
OK
Appliance info
< Back
Finish
Cancel

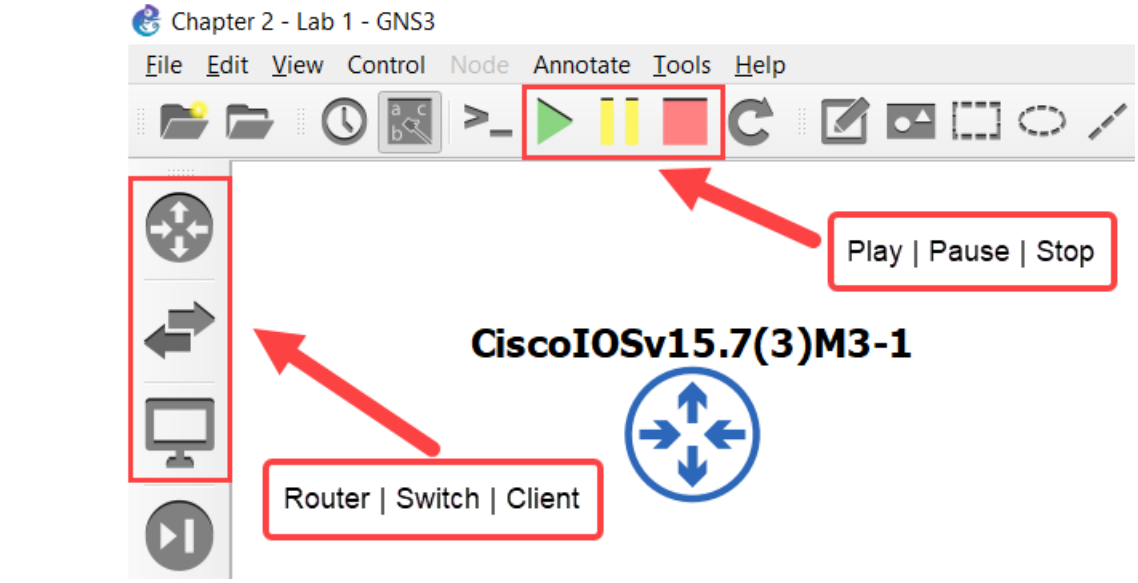
Chapter 2 - Lab 1 - GNS3
File Edit View Control Node Annotate Tools Help
Play | Pause | Stop
CiscoIOSv15.7(3)M3-1
Router | Switch | Client

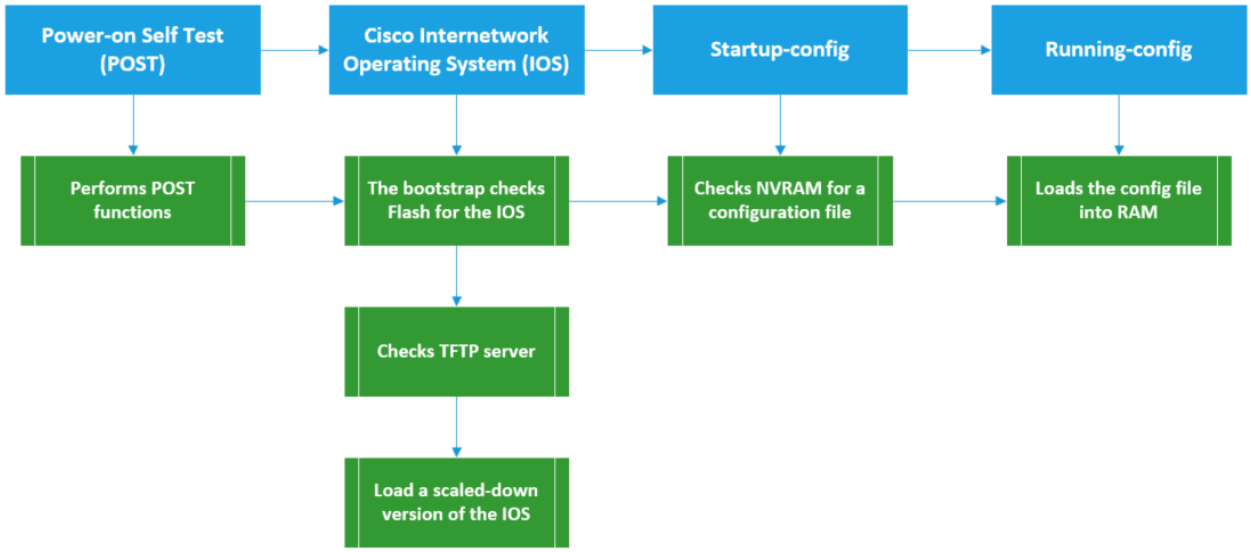
Power-on Self Test (POST)
Cisco Internetwork Operating System (IOS)
Startup-config
Running-config
Performs POST functions
The bootstrap checks Flash for the IOS
Checks NVRAM for a configuration file
Loads the config file into RAM
Checks TFTP server
Load a scaled-down version of the IOS

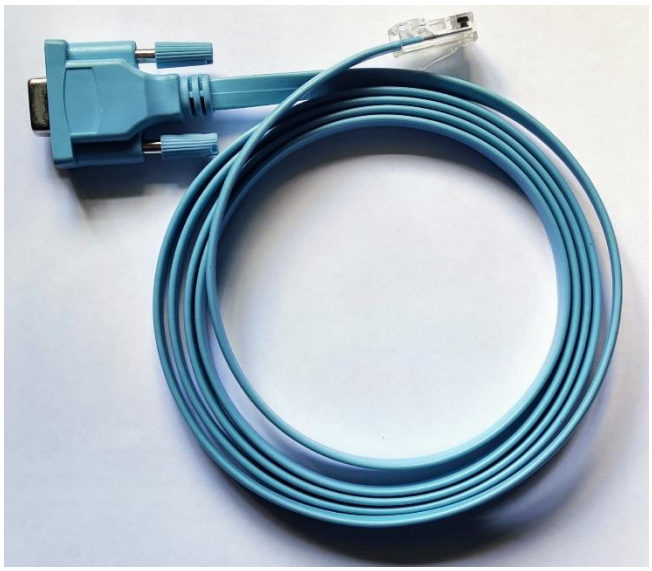

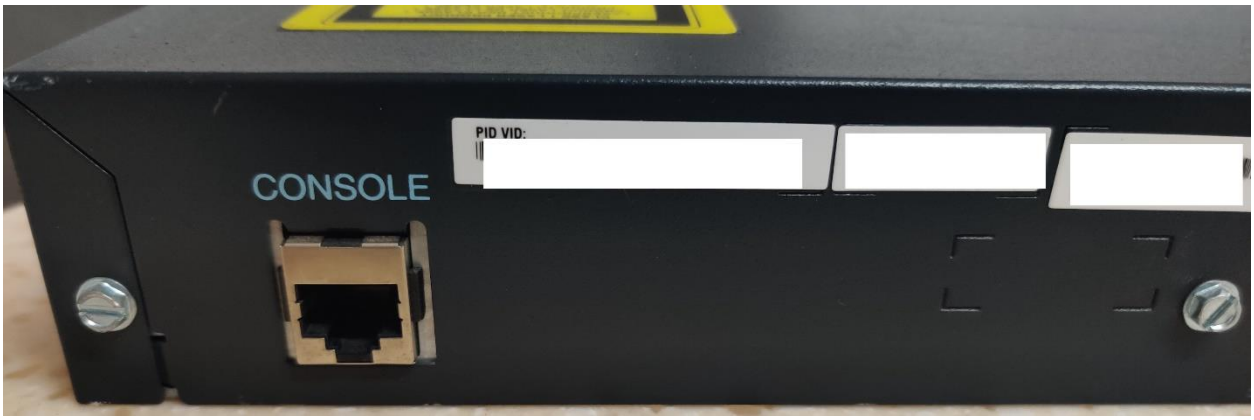
CONSOLE
PID VID:

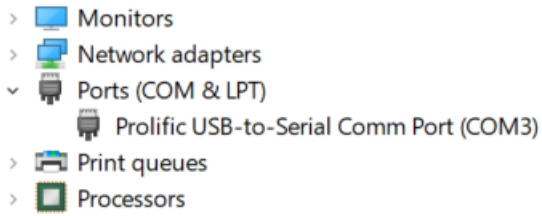

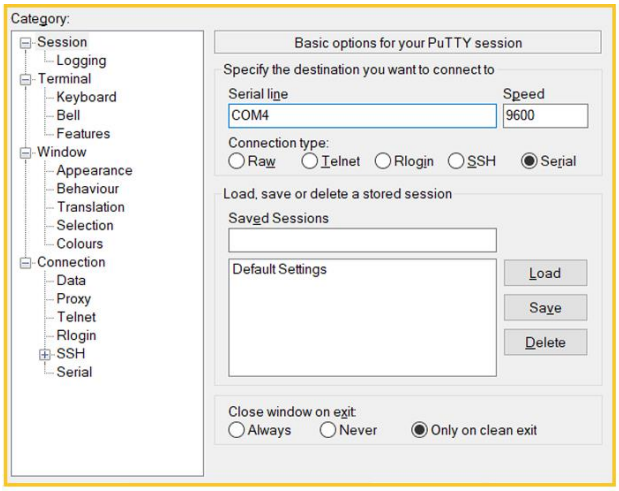

PuTTy

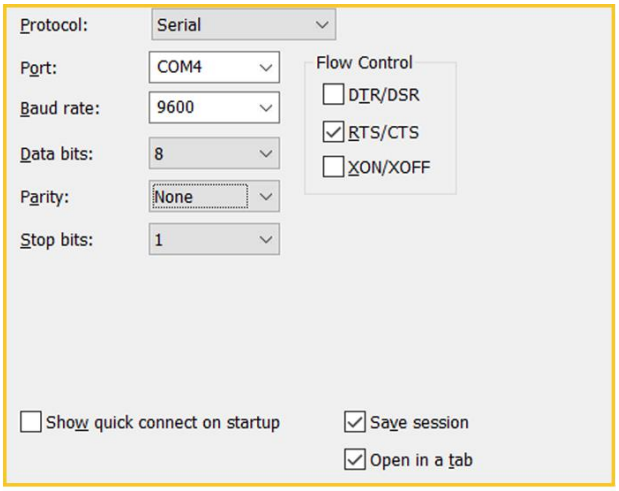

SecureCRT

```
Cisco CISCO2911/K9 (revision 1.0) with 491520K/32768K bytes of memory.
Processor board ID FTX152400KS
3 Gigabit Ethernet interfaces
DRAM configuration is 64 bits wide with parity disabled.
255K bytes of non-volatile configuration memory.
249856K bytes of ATA System CompactFlash 0 (Read/Write)


         --- System Configuration Dialog ---

Would you like to enter the initial configuration dialog? [yes/no]: no


Press RETURN to get started!


Router>
```

User Exec mode

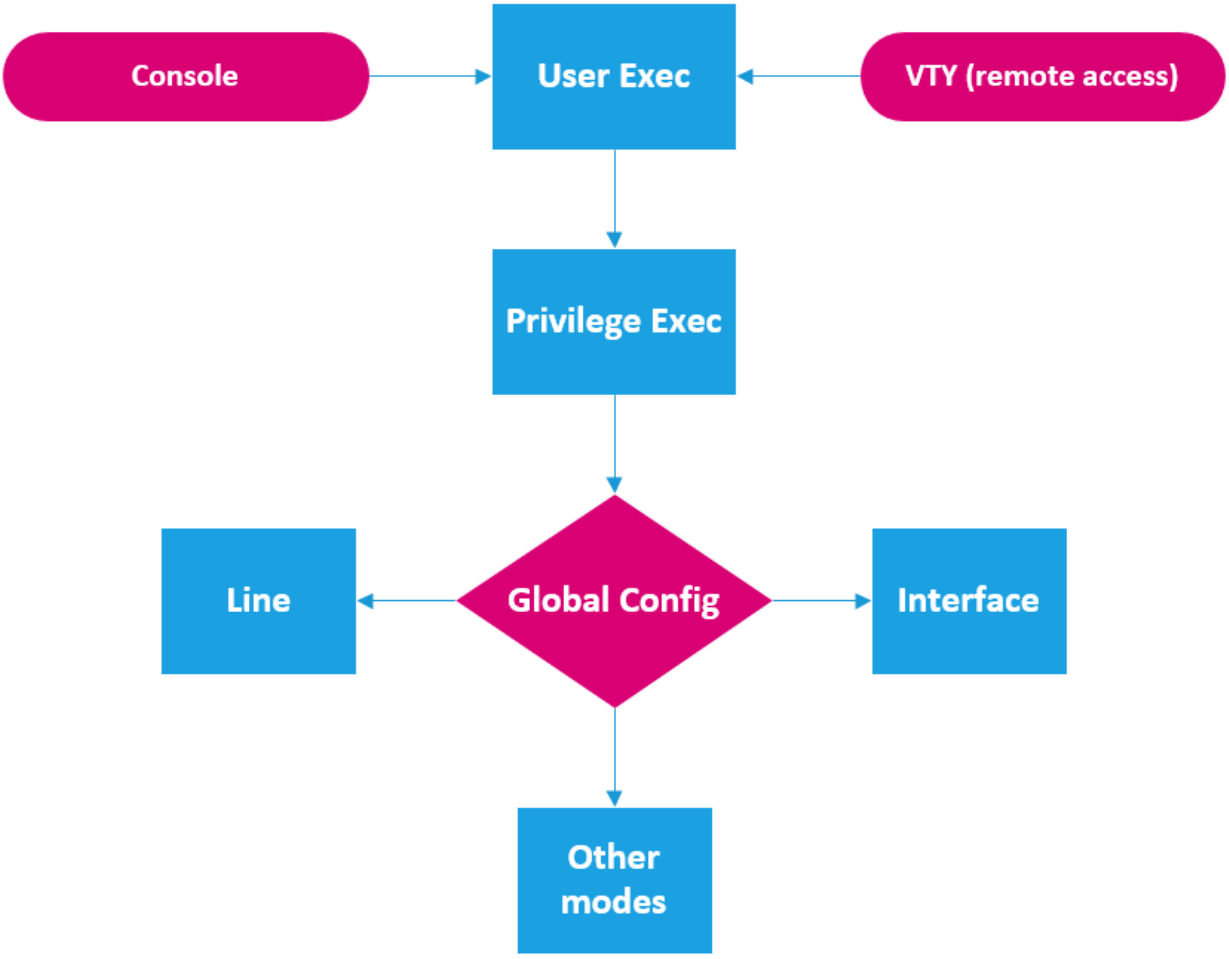
Console
User Exec
VTY (remote access)
Privilege Exec
Line
Global Config
Interface
Other modes

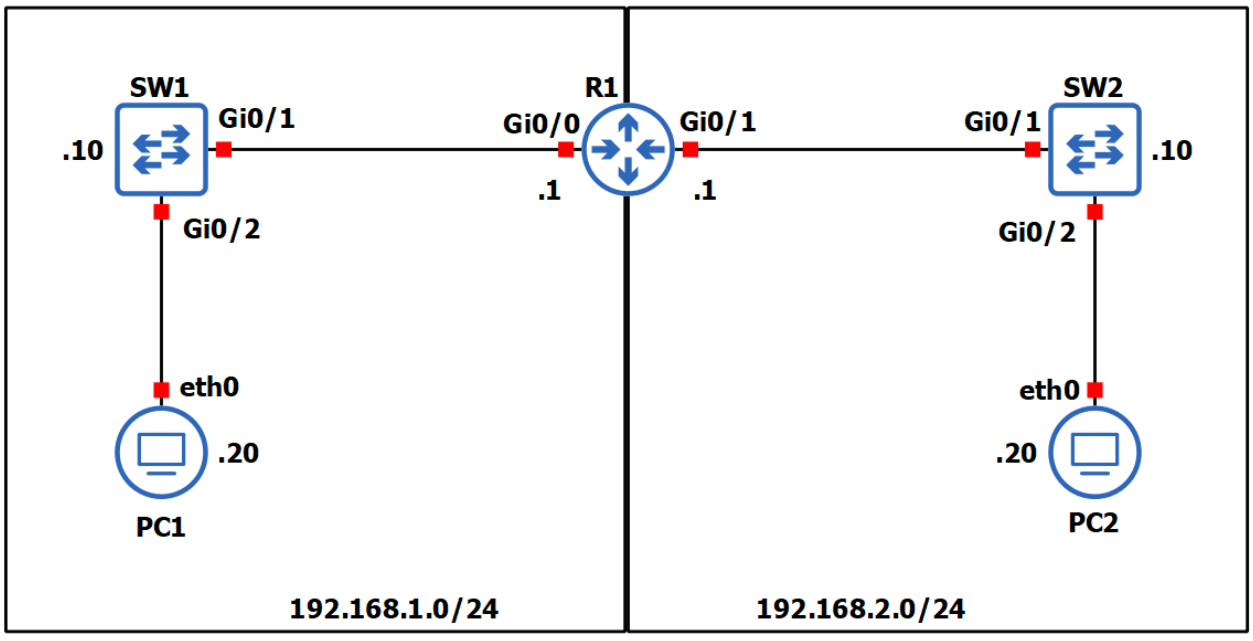
SW1
Gi0/1
.10
Gi0/2
eth0
.20
PC1
R1
Gi0/0
.1
Gi0/1
.1
SW2
Gi0/1
.10
Gi0/2
eth0
.20
PC2
192.168.1.0/24
192.168.2.0/24

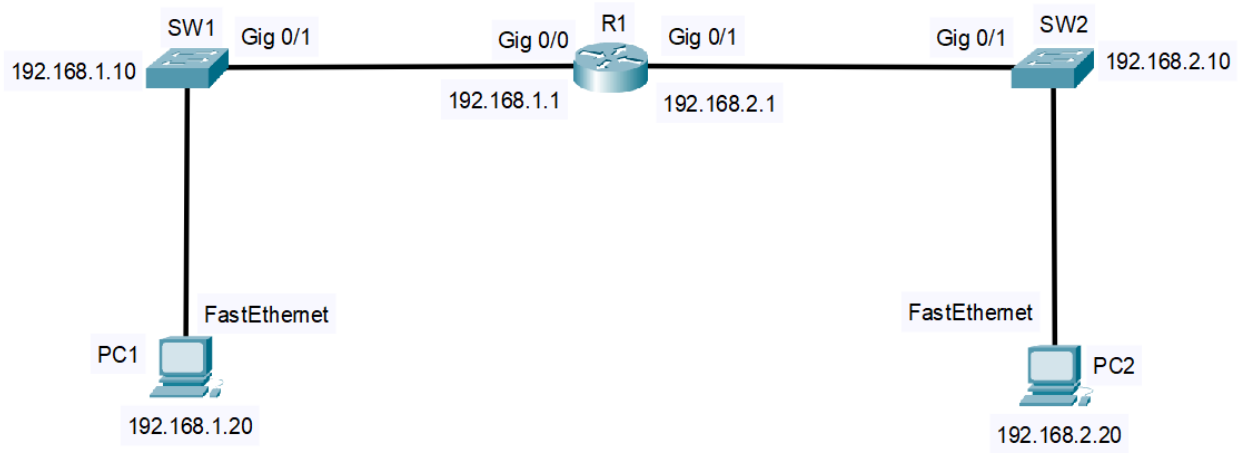


```
Router#show ip interface brief
Interface                  IP-Address      OK? Method Status                Protocol
GigabitEthernet0/0         unassigned      YES unset  administratively down down
GigabitEthernet0/1         unassigned      YES unset  administratively down down
GigabitEthernet0/2         unassigned      YES unset  administratively down down
GigabitEthernet0/3         unassigned      YES unset  administratively down down
Router#
```

```
R1#show ip interface brief
Interface              IP-Address      OK? Method Status                Protocol
GigabitEthernet0/0     192.168.1.1     YES manual up                    up
GigabitEthernet0/1     unassigned      YES NVRAM  administratively down down
GigabitEthernet0/2     unassigned      YES NVRAM  administratively down down
Vlan1                  unassigned      YES NVRAM  administratively down down
R1#
```

```
R1#show ip interface brief
Interface              IP-Address      OK? Method Status                Protocol
GigabitEthernet0/0     192.168.1.1     YES manual up                    up
GigabitEthernet0/1     192.168.2.1     YES manual up                    up
GigabitEthernet0/2     unassigned      YES NVRAM  administratively down down
Vlan1                  unassigned      YES NVRAM  administratively down down
R1#
```

```
R1#show ip interface gigabitEthernet 0/0
GigabitEthernet0/0 is up, line protocol is up (connected)
  Internet address is 192.168.1.1/24
  Broadcast address is 255.255.255.255
  Address determined by setup command
  MTU is 1500 bytes
  Helper address is not set
  Directed broadcast forwarding is disabled
  Outgoing access list is not set
  Inbound  access list is not set
```

```
R1#show interfaces gigabitEthernet 0/0
GigabitEthernet0/0 is up, line protocol is up (connected)
  Hardware is CN Gigabit Ethernet, address is 00d0.588a.0e01 (bia 00d0.588a.0e01)
  Description: Connected to LAN 1 - 192.168.1.0/24 network
  Internet address is 192.168.1.1/24
  MTU 1500 bytes, BW 1000000 Kbit, DLY 10 usec,
     reliability 255/255, txload 1/255, rxload 1/255
  Encapsulation ARPA, loopback not set
  Keepalive set (10 sec)
  Full-duplex, 100Mb/s, media type is RJ45
  output flow-control is unsupported, input flow-control is unsupported
```

```
!
interface GigabitEthernet0/0
 description Connected to LAN 1 - 192.168.1.0/24 network
 ip address 192.168.1.1 255.255.255.0
 duplex auto
 speed auto
!
interface GigabitEthernet0/1
 description Connected to LAN 2 - 192.168.2.0/24 network
 ip address 192.168.2.1 255.255.255.0
 duplex auto
 speed auto
!
```

```
R1(config)#line console 0
R1(config-line)#password cisco123
R1(config-line)#login
R1(config-line)#exit
R1(config)#
```

```
R1(config)#enable password cisco456
R1(config)#exit
R1#
%SYS-5-CONFIG_I: Configured from console by console

R1#disable
R1>enable
Password:
R1#
```

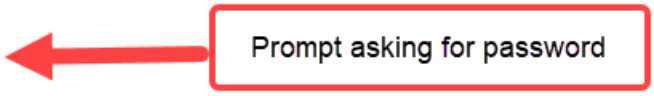

```
R1#show running-config
Building configuration...

Current configuration : 883 bytes
!
version 15.1
no service timestamps log datetime msec
no service timestamps debug datetime msec
no service password-encryption
!
hostname R1
!
!
!
enable password cisco456
!
!
enable secret 5 $1$mERr$B7IJJrJxq2fFyOs8ZEeVD1
enable password cisco456
!

    Only Authorized Access is permitted!!!

    User Access Verification

    Password:
```

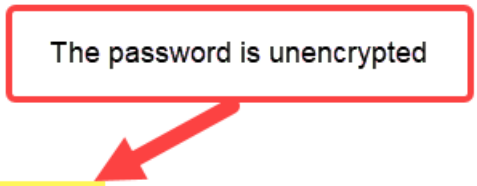

```
C:\>ping 8.8.8.8

Pinging 8.8.8.8 with 32 bytes of data:
Reply from 8.8.8.8: bytes=32 time=65ms TTL=50
Reply from 8.8.8.8: bytes=32 time=63ms TTL=50
Reply from 8.8.8.8: bytes=32 time=65ms TTL=50
Reply from 8.8.8.8: bytes=32 time=65ms TTL=50

Ping statistics for 8.8.8.8:
    Packets: Sent = 4, Received = 4, Lost = 0 (0% loss),
Approximate round trip times in milli-seconds:
    Minimum = 63ms, Maximum = 65ms, Average = 64ms
```

```
R1>ping 192.168.1.10

Type escape sequence to abort.
Sending 5, 100-byte ICMP Echos to 192.168.1.10, timeout is 2 seconds:
!!!!!
Success rate is 100 percent (5/5), round-trip min/avg/max = 0/0/3 ms
```

Chapter 3: IP Addressing and Subnetting

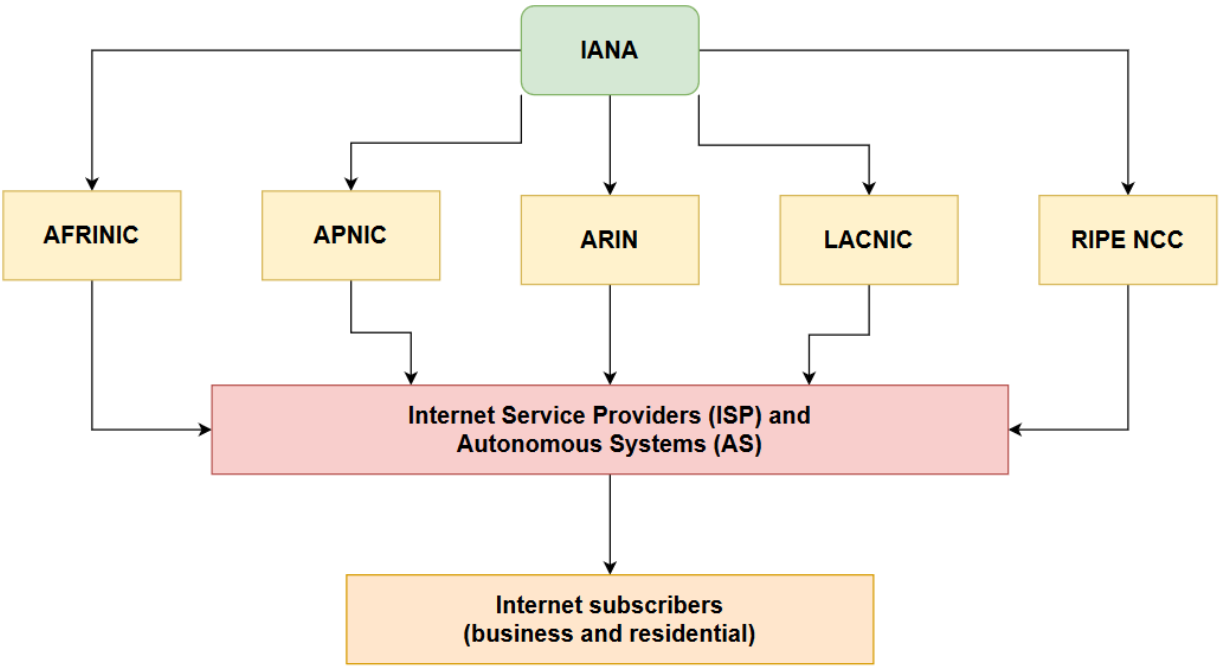

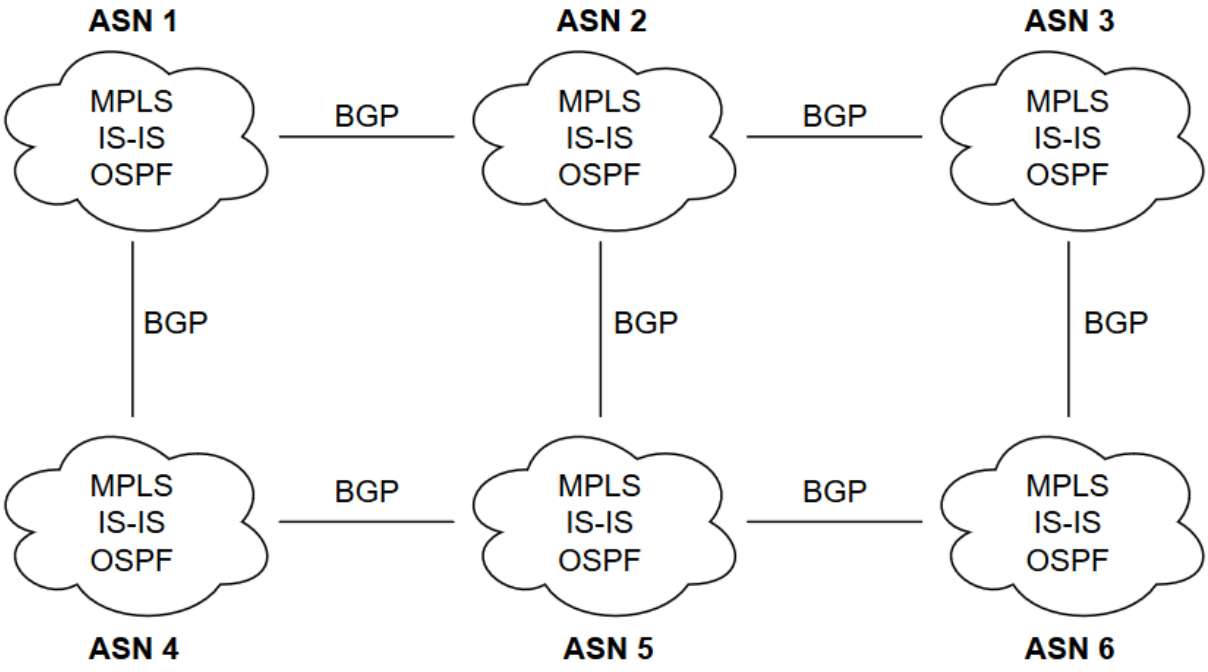

Version	Internet Header Length	Differentiated Services (DS)		Total Length	
		DSCP	ECN		
Identification				Flag	Fragment Offset
Time-to-Live (TTL)		Protocol		Header Checksum	
Source IP Address					
Destination IP Address					
Options					

```
C:\>ping -i 2 8.8.8.8

Pinging 8.8.8.8 with 32 bytes of data:
Reply from 172.16.16.1: TTL expired in transit.
Reply from 172.16.16.1: TTL expired in transit.
Reply from 172.16.16.1: TTL expired in transit.
Reply from 172.16.16.1: TTL expired in transit.

Ping statistics for 8.8.8.8:
    Packets: Sent = 4, Received = 4, Lost = 0 (0% loss),

C:\>
```

Radix	2^7	2^6	2^5	2^4	2^3	2^2	2^1	2^0
Decimal	128	64	32	16	8	4	2	1

Radix	2^7	2^6	2^5	2^4	2^3	2^2	2^1	2^0
Decimal	128	64	32	16	8	4	2	1
Binary	1	1	0	0	0	0	0	0

Radix	2^7	2^6	2^5	2^4	2^3	2^2	2^1	2^0
Decimal	128	64	32	16	8	4	2	1
Binary	1	0	1	0	1	0	0	0

Radix	2^7	2^6	2^5	2^4	2^3	2^2	2^1	2^0
Decimal	128	64	32	16	8	4	2	1
Binary	0	0	0	0	0	0	0	1

Radix	2^7	2^6	2^5	2^4	2^3	2^2	2^1	2^0
Decimal	128	64	32	16	8	4	2	1
Binary	1	0	0	0	0	0	0	1

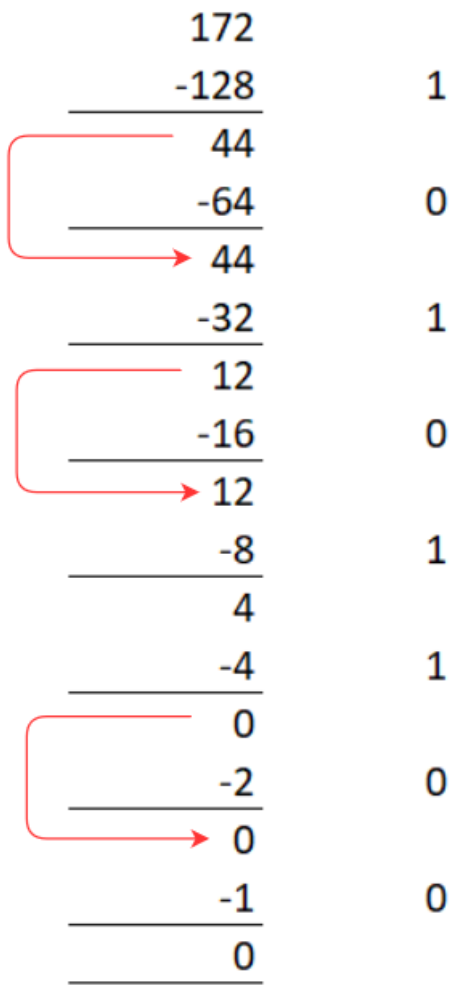

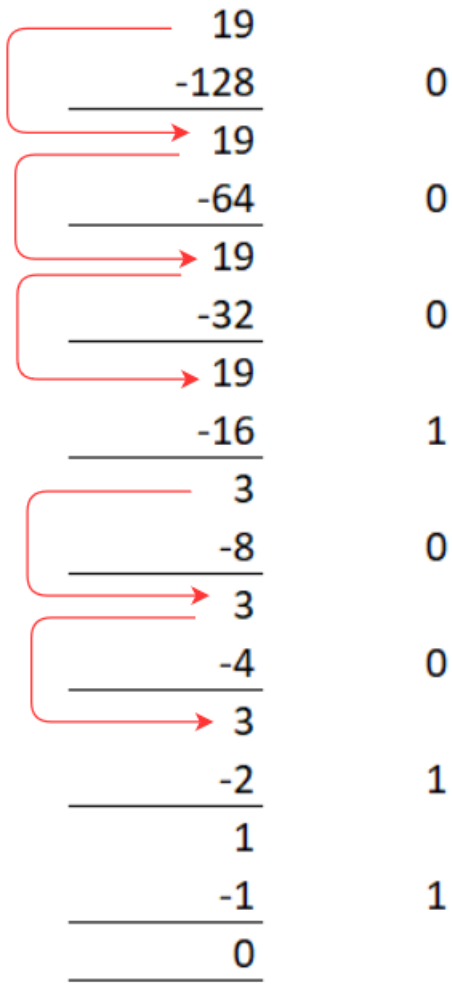
19
-128
0
19
-64
0
19
-32
0
19
-16
1
3
-8
0
3
-4
0
3
-2
1
1
-1
1
0

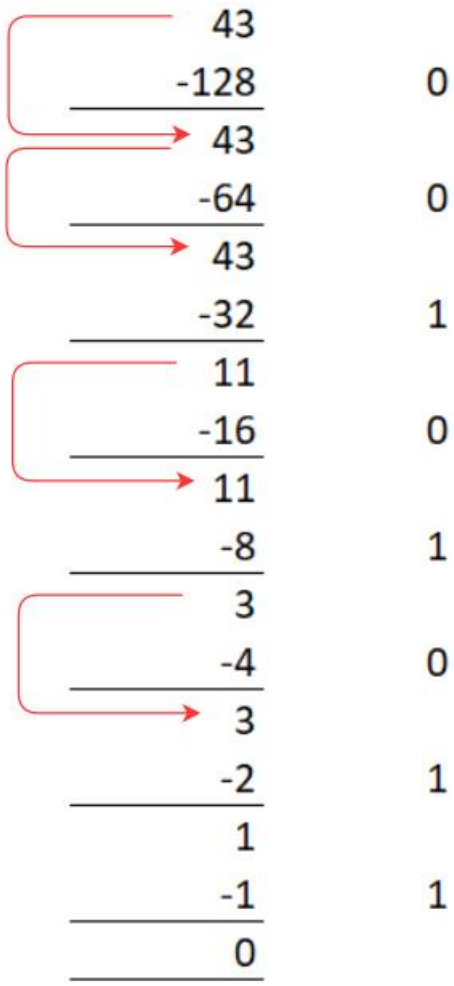
43
-128
0
43
-64
0
43
-32
1
11
-16
0
11
-8
1
3
-4
0
3
-2
1
1
-1
1
0

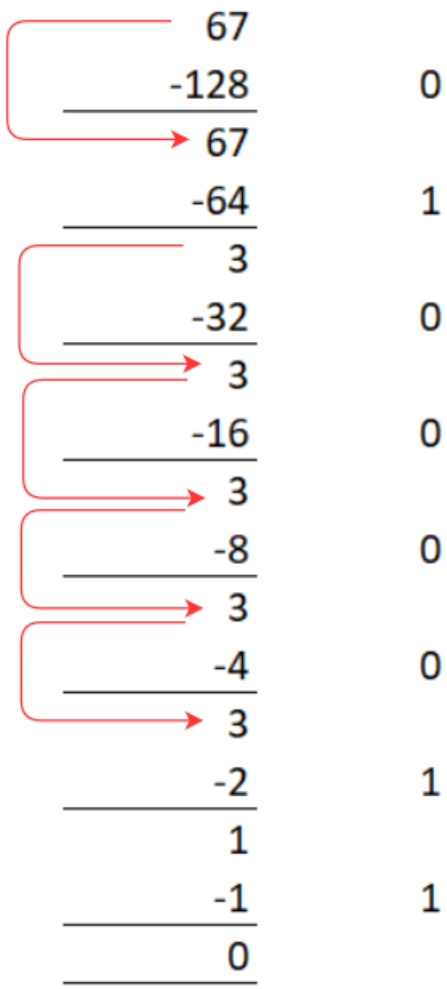

172	19	43	67
10101100	00010011	00101011	01000011

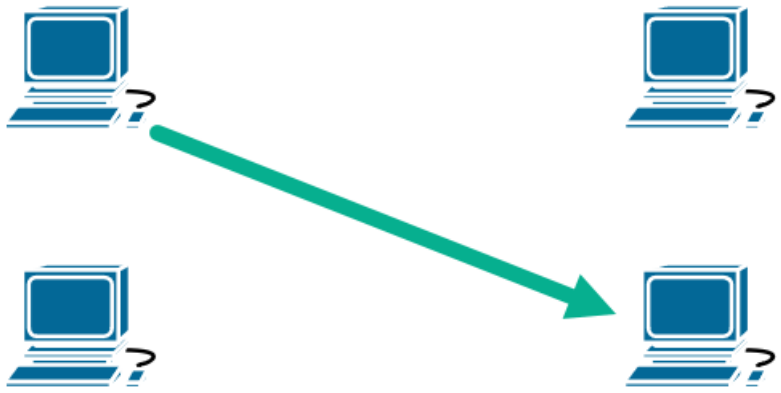

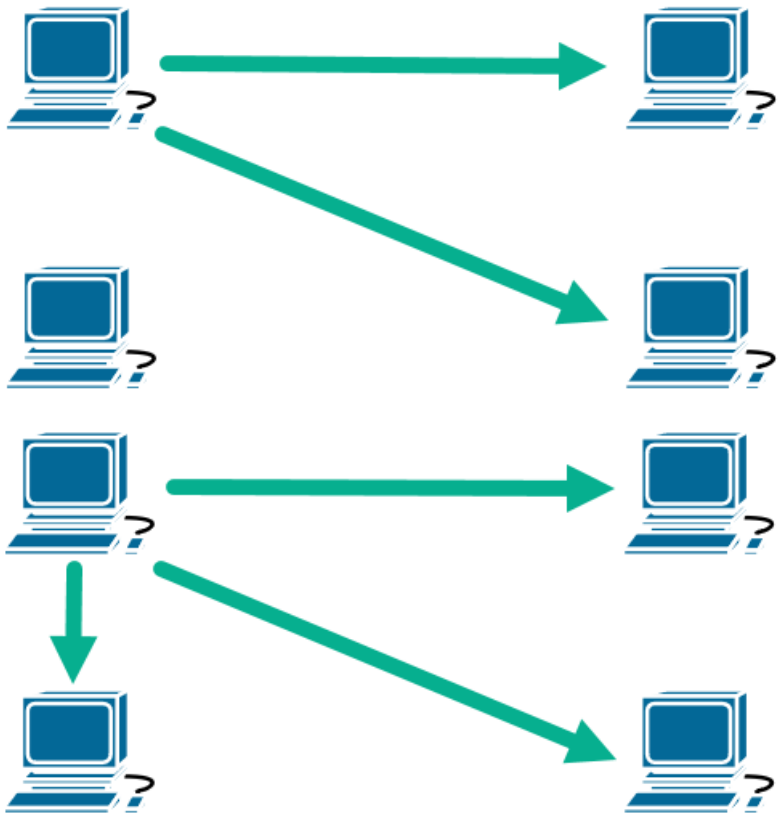

Class A	1.0.0.0 - 9.255.255.255 and 11.0.0.0 - 126.255.255.255
Class B	128.0.0.0 - 171.15.255.255 and 172.32.0.0 - 191.255.255.255
Class C	192.0.0.0 - 192.167.255.255 and 192.169.0.0 - 223.255.255.255
Class D	224.0.0.0 - 239.255.255.255
Class E	240.0.0.0 - 255.255.255.255

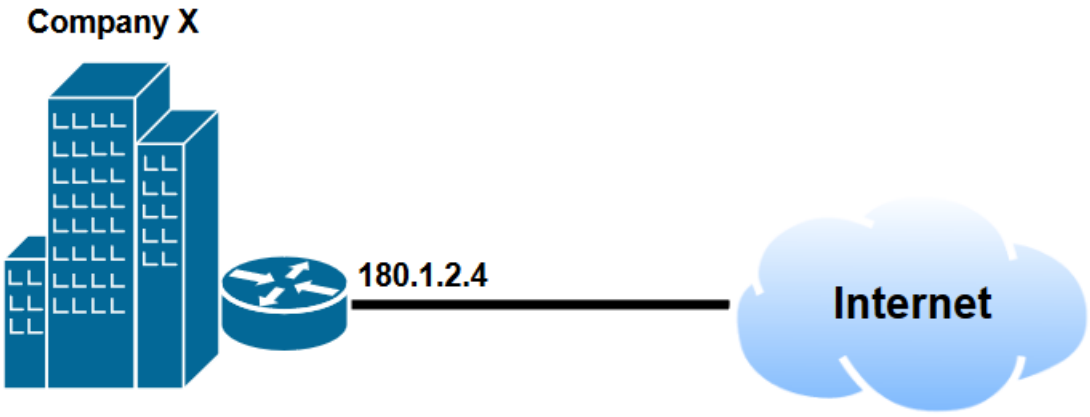

Class	Network Address Block	Address Range
A	10.0.0.0/8	10.0.0.0 - 10.255.255.255
B	172.16.0.0/12	172.16.0.0 - 172.31.255.255
C	192.168.0.0/24	192.168.0.0 - 192.168.255.255

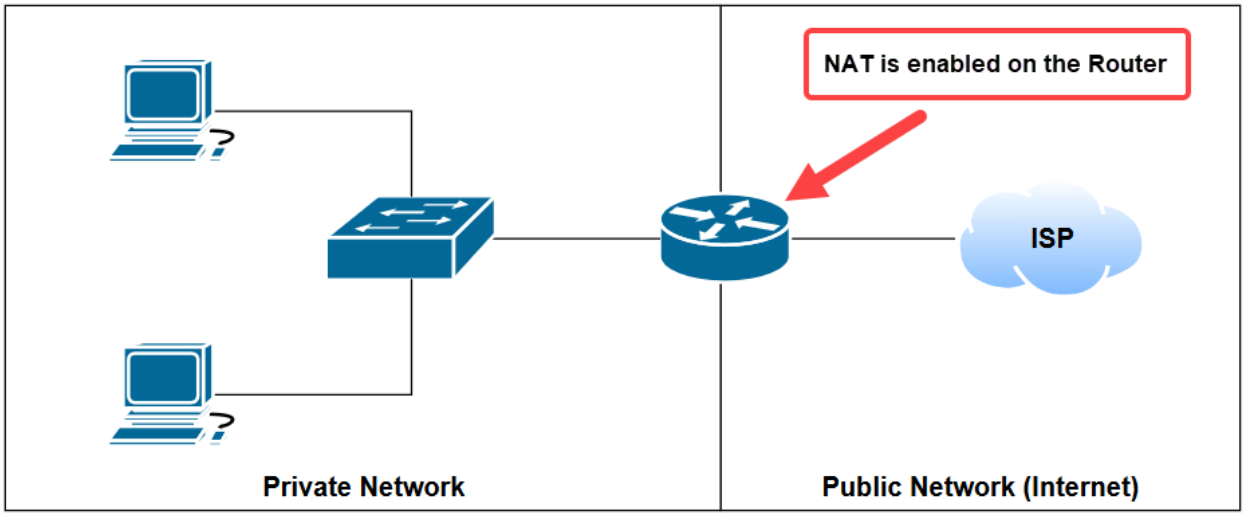

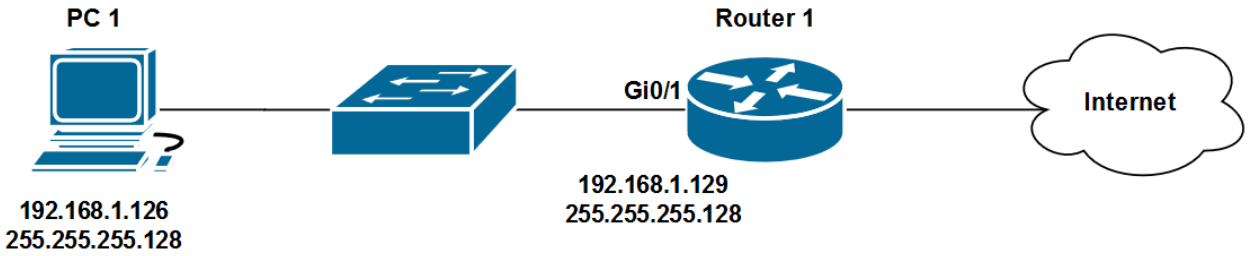

IP address	11000000.10101000.00000001.01111110
Subnet mask	11111111.11111111.11111111.10000000
Network ID	11000000.10101000.00000001.00000000
IP address	11000000.10101000.00000001.10000001
Subnet mask	11111111.11111111.11111111.10000000
Network ID	11000000.10101000.00000001.10000000

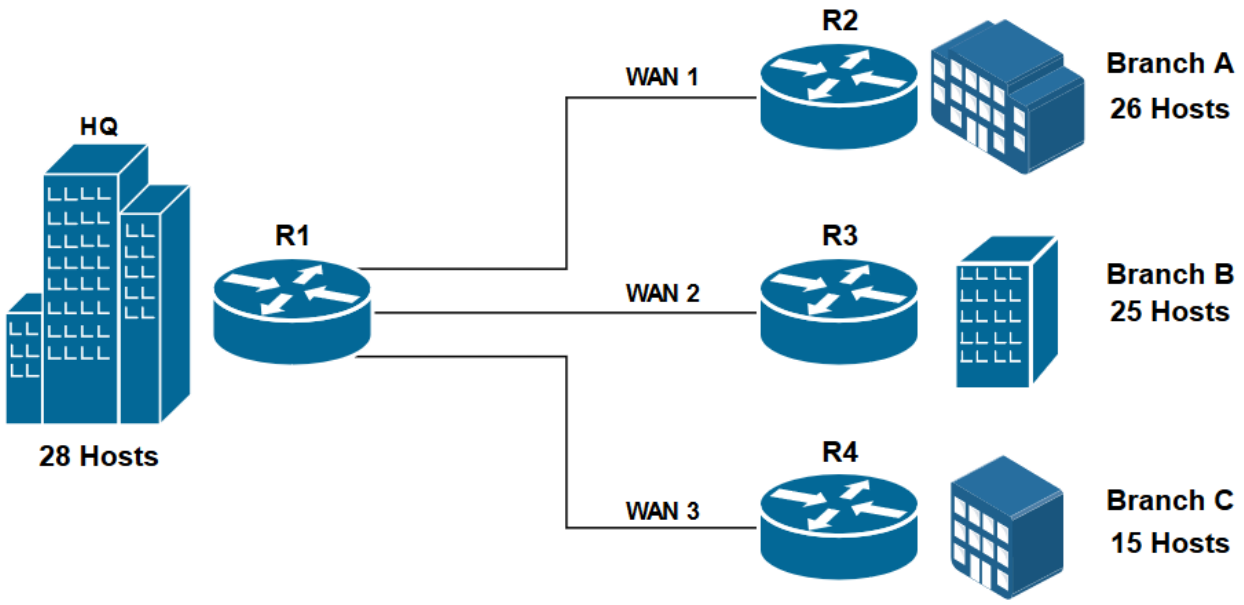

Class A - 255.0.0.0	11111111	00000000	00000000	00000000
Class B - 255.255.0.0	11111111	11111111	00000000	00000000
Class C - 255.255.255.0	11111111	11111111	11111111	00000000

Network block	**11000000.10101000.00000001.00000000**
Subnet mask	**11111111.11111111.11111111.00000000**

Network block	**11000000.10101000.00000001.00000000**
Subnet mask	**11111111.11111111.11111111.11000000**

Network block	**11000000.10101000.00000001.00000000**
Subnet mask	**11111111.11111111.11111111.11100000**

Subnet 1	11000000.10101000.00000001.00000000	192.168.1.0/27
Subnet 2	11000000.10101000.00000001.00100000	192.168.1.32/27
Subnet 3	11000000.10101000.00000001.01000000	192.168.1.64/27
Subnet 4	11000000.10101000.00000001.01100000	192.168.1.96/27
Subnet 5	11000000.10101000.00000001.10000000	192.168.1.128/27
Subnet 6	11000000.10101000.00000001.10100000	192.168.1.160/27
Subnet 7	11000000.10101000.00000001.11000000	192.168.1.192/27
Subnet 8	11000000.10101000.00000001.11100000	192.168.1.224/27

Subnet 1	11000000.10101000.00000001.00000000	192.168.1.0/27
First usable IP	11000000.10101000.00000001.00000001	192.168.1.1/27
Last usable IP	11000000.10101000.00000001.00011110	192.168.1.30/27
Broadcast	11000000.10101000.00000001.00011111	192.168.1.31/27

Subnet 2	11000000.10101000.00000001.00100000	192.168.1.32/27
First usable IP	11000000.10101000.00000001.00100001	192.168.1.33/27
Last usable IP	11000000.10101000.00000001.00111110	192.168.1.62/27
Broadcast	11000000.10101000.00000001.00111111	192.168.1.63/27

Subnet 3	11000000.10101000.00000001.01000000	192.168.1.64/27
First usable IP	11000000.10101000.00000001.01000001	192.168.1.65/27
Last usable IP	11000000.10101000.00000001.01011110	192.168.1.94/27
Broadcast	11000000.10101000.00000001.01011111	192.168.1.95/27

Subnet 4	11000000.10101000.00000001.01100000	192.168.1.96/27
First usable IP	11000000.10101000.00000001.01100001	192.168.1.97/27
Last usable IP	11000000.10101000.00000001.01111110	192.168.1.126/27
Broadcast	11000000.10101000.00000001.01111111	192.168.1.127/27

Subnet 5	11000000.10101000.00000001.10000000	192.168.1.128/27
Subnet 6	11000000.10101000.00000001.10100000	192.168.1.160/27
Subnet 7	11000000.10101000.00000001.11000000	192.168.1.192/27

Network ID	11000000.10101000.00000001.11100000	192.168.1.224
Subnet mask	11111111.11111111.11111111.11100000	255.255.255.224

Network ID	11000000.10101000.00000001.11100000	192.168.1.224
Subnet	11111111.11111111.11111111.11111100	255.255.255.252

Subnet 1	11000000.10101000.00000001.11100000	192.168.1.224/30
Subnet 2	11000000.10101000.00000001.11100100	192.168.1.228/30
Subnet 3	11000000.10101000.00000001.11101000	192.168.1.232/30
Subnet 4	11000000.10101000.00000001.11101100	192.168.1.236/30
Subnet 5	11000000.10101000.00000001.11110000	192.168.1.240/30
Subnet 6	11000000.10101000.00000001.11110100	192.168.1.244/30
Subnet 7	11000000.10101000.00000001.11111000	192.168.1.248/30
Subnet 8	11000000.10101000.00000001.11111100	192.168.1.252/30

Subnet 1	11000000.10101000.00000001.11100000	192.168.1.224/30
First usable IP	11000000.10101000.00000001.11100001	192.168.1.225/30
Last usable IP	11000000.10101000.00000001.11100010	192.168.1.226/30
Broadcast	11000000.10101000.00000001.11100011	192.168.1.227/30

Subnet 2	11000000.10101000.00000001.11100100	192.168.1.228/30
First usable IP	11000000.10101000.00000001.11100101	192.168.1.229/30
Last usable IP	11000000.10101000.00000001.11100110	192.168.1.230/30
Broadcast	11000000.10101000.00000001.11100111	192.168.1.231/30

Subnet 3	**11000000.10101000.00000001111010**00	**192.168.1.232/30**
First usable IP	**11000000.10101000.00000001111010**01	**192.168.1.233/30**
Last usable IP	**11000000.10101000.00000001111010**10	**192.168.1.234/30**
Broadcast	**11000000.10101000.00000001111010**11	**192.168.1.235/30**

Subnet 4	**11000000.10101000.00000001.11101100**	**192.168.1.236/30**
Subnet 5	**11000000.10101000.00000001.1111000**	**192.168.1.240/30**
Subnet 6	**11000000.10101000.00000001.11110100**	**192.168.1.244/30**
Subnet 7	**11000000.10101000.00000001.11111000**	**192.168.1.248/30**
Subnet 8	**11000000.10101000.00000001.11111100**	**192.168.1.252/30**

Version	**Traffic Class**	**Flow Control**	
Payload Length		**Next Header**	**Hop Limit**
Source IP Address			
Destination IP Address			

FC	99	47
11111100	10011001	01000111

75	CE	E0
01110101	11001110	11100000

FC	99	47	**FF**	**FE**	75	CE	E0
11111100	10011001	01000111	**11111111**	**11111110**	01110101	11001110	11100000

11111110	10011001	01000111	**11111111**	**11111110**	01110101	11001110	11100000

FE	99	47	**FF**	**FE**	75	CE	E0

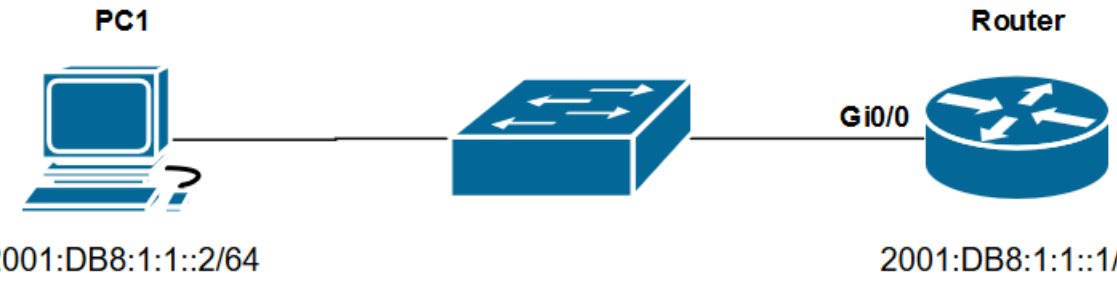


```
R1#show ipv6 interface brief
GigabitEthernet0/0          [up/up]
    FE80::1
    2001:DB8:1:1::1
GigabitEthernet0/1          [administratively down/down]
    unassigned
GigabitEthernet0/2          [administratively down/down]
    unassigned
```

IPv6 addresses

```
R1#show ipv6 interface GigabitEthernet 0/0
GigabitEthernet0/0 is up, line protocol is up
  IPv6 is enabled, link-local address is FE80::1
  No Virtual link-local address(es):
  Global unicast address(es):
    2001:DB8:1:1::1, subnet is 2001:DB8:1:1::/64
```

```
R1#show running-config | section interface
interface GigabitEthernet0/0
 no ip address
 duplex auto
 speed auto
 ipv6 address FE80::1 link-local
 ipv6 address 2001:DB8:1:1::1/64
```

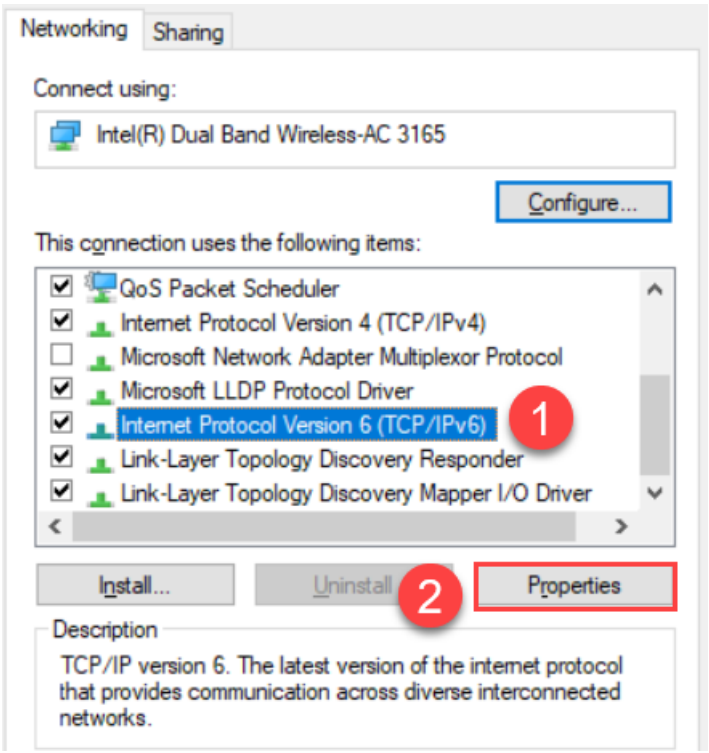
Networking
Sharing
Connect using:
Intel(R) Dual Band Wireless-AC 3165
Configure...
This connection uses the following items:
QoS Packet Scheduler
Internet Protocol Version 4 (TCP/IPv4)
Microsoft Network Adapter Multiplexor Protocol
Microsoft LLDP Protocol Driver
Internet Protocol Version 6 (TCP/IPv6)
1
Link-Layer Topology Discovery Responder
Link-Layer Topology Discovery Mapper I/O Driver
Install...
Uninstall
2
Properties
Description
TCP/IP version 6. The latest version of the internet protocol that provides communication across diverse interconnected networks.

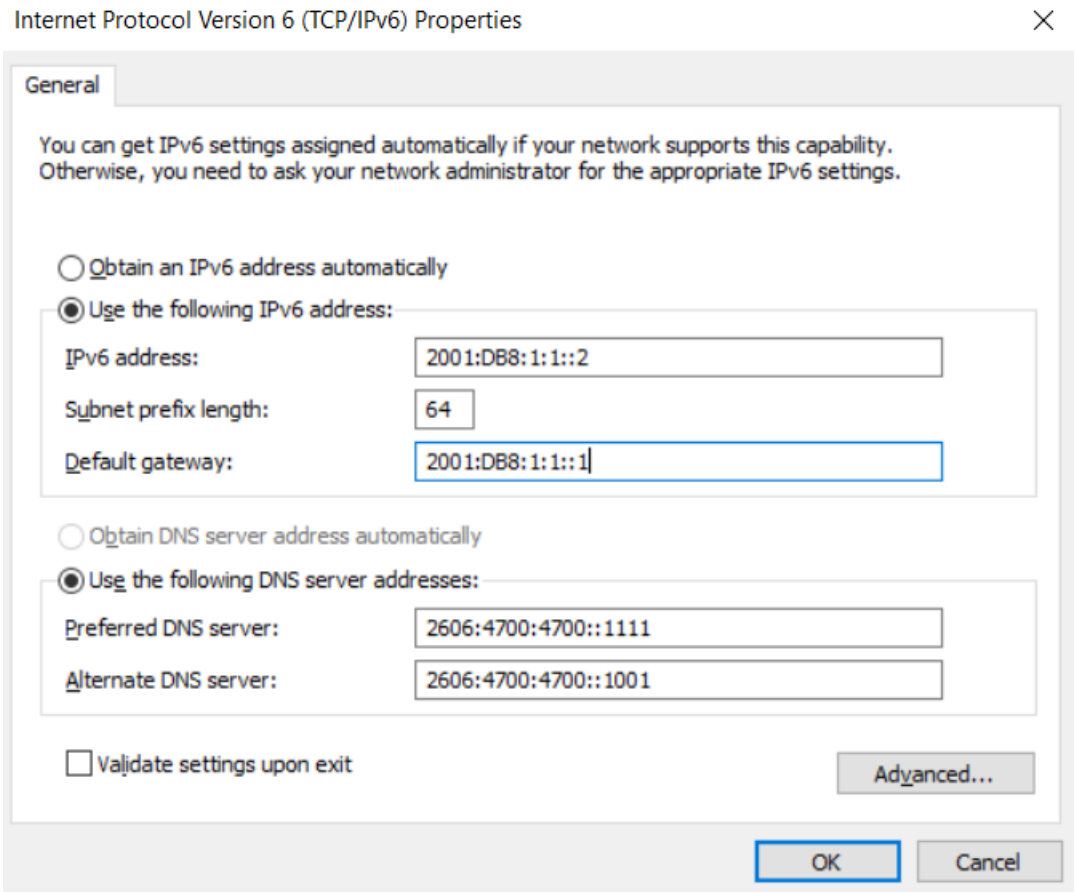
Internet Protocol Version 6 (TCP/IPv6) Properties
General
You can get IPv6 settings assigned automatically if your network supports this capability. Otherwise, you need to ask your network administrator for the appropriate IPv6 settings.
Obtain an IPv6 address automatically
Use the following IPv6 address:
IPv6 address:
2001:DB8:1:1::2
Subnet prefix length:
64
Default gateway:
2001:DB8:1:1::1
Obtain DNS server address automatically
Use the following DNS server addresses:
Preferred DNS server:
2606:4700:4700::1111
Alternate DNS server:
2606:4700:4700::1001
Validate settings upon exit
Advanced...
OK
Cancel

```
R1>ping 2001:DB8:1:1::2

Type escape sequence to abort.
Sending 5, 100-byte ICMP Echos to 2001:DB8:1:1::2, timeout is 2 seconds:
!!!!!
Success rate is 100 percent (5/5), round-trip min/avg/max = 0/0/2 ms
```

Chapter 4: Detecting Physical Issues, Wireless Architectures, and Virtualization

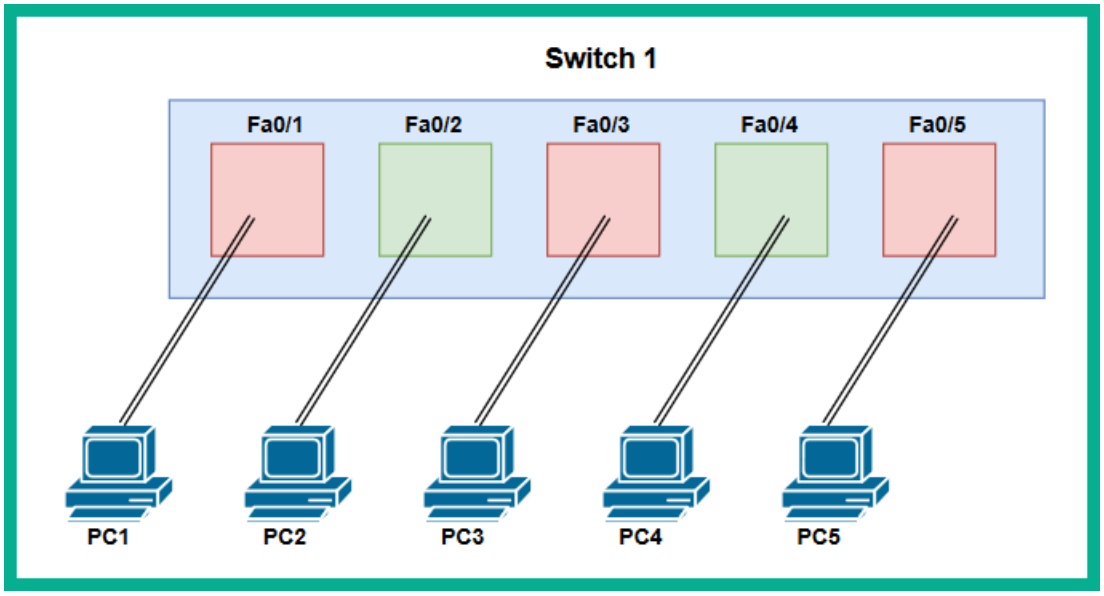


```
SW1#show interfaces FastEthernet 0/1
FastEthernet0/1 is up, line protocol is up (connected)
  Hardware is Lance, address is 00d0.ff55.dc01 (bia 00d0.ff55.dc01)
 BW 100000 Kbit, DLY 1000 usec,
     reliability 255/255, txload 1/255, rxload 1/255
  Encapsulation ARPA, loopback not set
  Keepalive set (10 sec)
  Full-duplex, 100Mb/s
  input flow-control is off, output flow-control is off
  ARP type: ARPA, ARP Timeout 04:00:00
  Last input 00:00:08, output 00:00:05, output hang never
  Last clearing of "show interface" counters never
  Input queue: 0/75/0/0 (size/max/drops/flushes); Total output drops: 0
  Queueing strategy: fifo
  Output queue :0/40 (size/max)
```

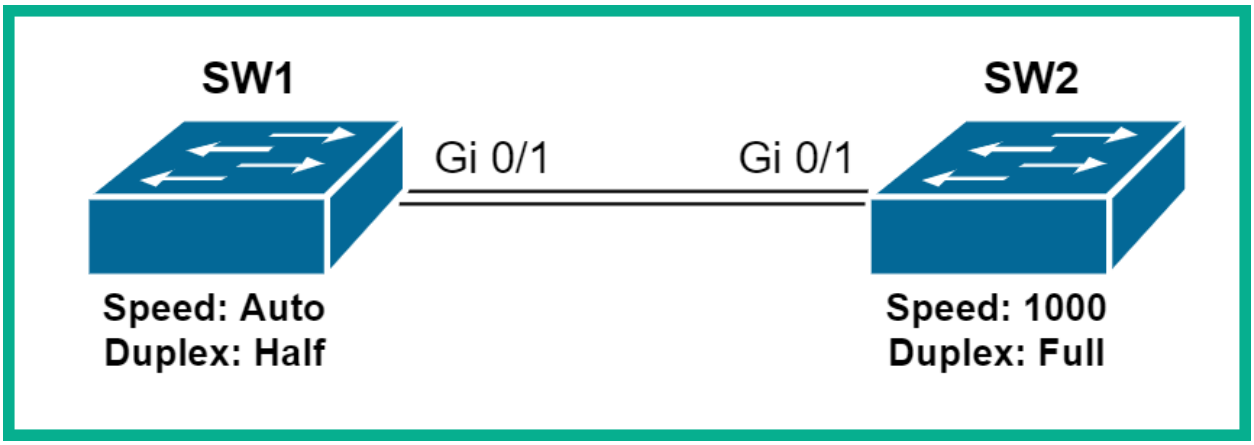


```
SW1#show interface status

Port      Name               Status       Vlan       Duplex  Speed Type
Gi0/0                        notconnect   1          a-full   auto RJ45
Gi0/1     Connected to SW2   connected    1          a-full   1000 RJ45
Gi0/2                        notconnect   1          a-full   auto RJ45
Gi0/3                        notconnect   1          a-full   auto RJ45
Gi1/0                        notconnect   1          a-full   auto RJ45
```

```
SW2#show interfaces status

Port      Name               Status       Vlan       Duplex  Speed Type
Gi0/0                        notconnect   1          a-full   auto RJ45
Gi0/1     Connected to SW1   connected    1          a-full   auto RJ45
Gi0/2                        notconnect   1          a-full   auto RJ45
Gi0/3                        notconnect   1          a-full   auto RJ45
```

```
SW1#show interfaces GigabitEthernet 0/1
GigabitEthernet0/1 is up, line protocol is up (connected)
  Hardware is iGbE, address is 0cdb.5070.d301 (bia 0cdb.5070.d301)
  Description: Connected to SW2
  MTU 1500 bytes, BW 1000000 Kbit/sec, DLY 10 usec,
     reliability 255/255, txload 1/255, rxload 1/255
  Encapsulation ARPA, loopback not set
  Keepalive set (10 sec)
  Auto Duplex, 1000Mbps, link type is force-up, media type is RJ45
  output flow-control is unsupported, input flow-control is unsupported
```

```
SW1#show running-config interface gigabitEthernet 0/1
Building configuration...

Current configuration : 99 bytes
!
interface GigabitEthernet0/1
 description Connected to SW2
 speed 1000
 no negotiation auto
end

SW1#
```

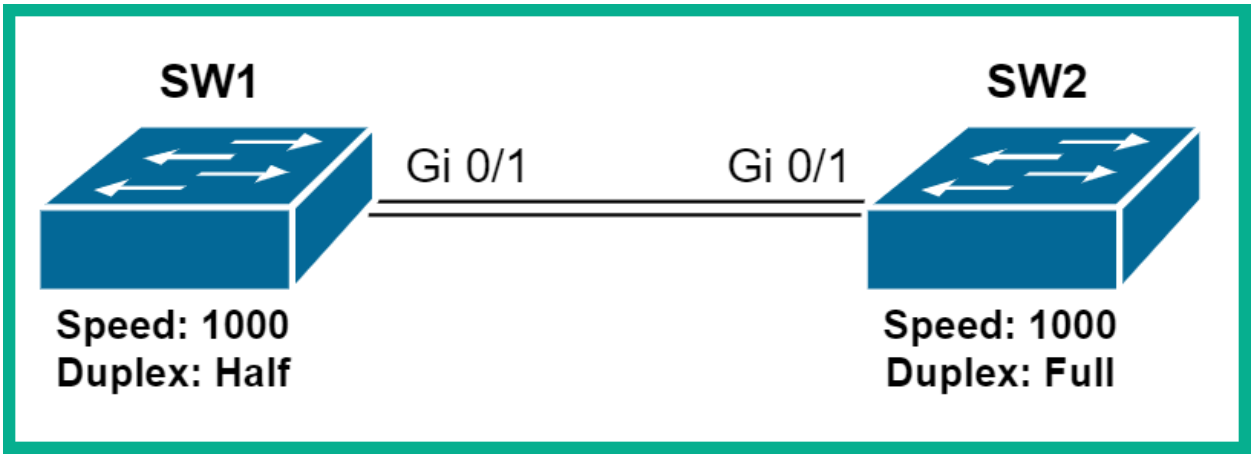


```
SW1#show interfaces status

Port      Name               Status       Vlan       Duplex  Speed Type
Gi0/0                        connected    1          a-full   auto RJ45
Gi0/1     Connected to SW2   connected    1            full   1000 RJ45
Gi0/2                        notconnect   1          a-full   auto RJ45
Gi0/3                        notconnect   1          a-full   auto RJ45
Gi1/0                        notconnect   1          a-full   auto RJ45
```

```
SW1#show running-config interface GigabitEthernet 0/1
Building configuration...

Current configuration : 112 bytes
!
interface GigabitEthernet0/1
 description Connected to SW2
 speed 1000
 duplex full
 no negotiation auto
end

SW1#
```

```
 5 minute input rate 0 bits/sec, 0 packets/sec
 5 minute output rate 0 bits/sec, 0 packets/sec
    956 packets input, 193351 bytes, 0 no buffer
    Received 956 broadcasts, 0 runts, 0 giants, 0 throttles
    0 input errors, 0 CRC, 0 frame, 0 overrun, 0 ignored, 0 abort
    0 watchdog, 0 multicast, 0 pause input
    0 input packets with dribble condition detected
    2357 packets output, 263570 bytes, 0 underruns
    0 output errors, 0 collisions, 10 interface resets
    0 babbles, 0 late collision, 0 deferred
    0 lost carrier, 0 no carrier
    0 output buffer failures, 0 output buffers swapped out
```

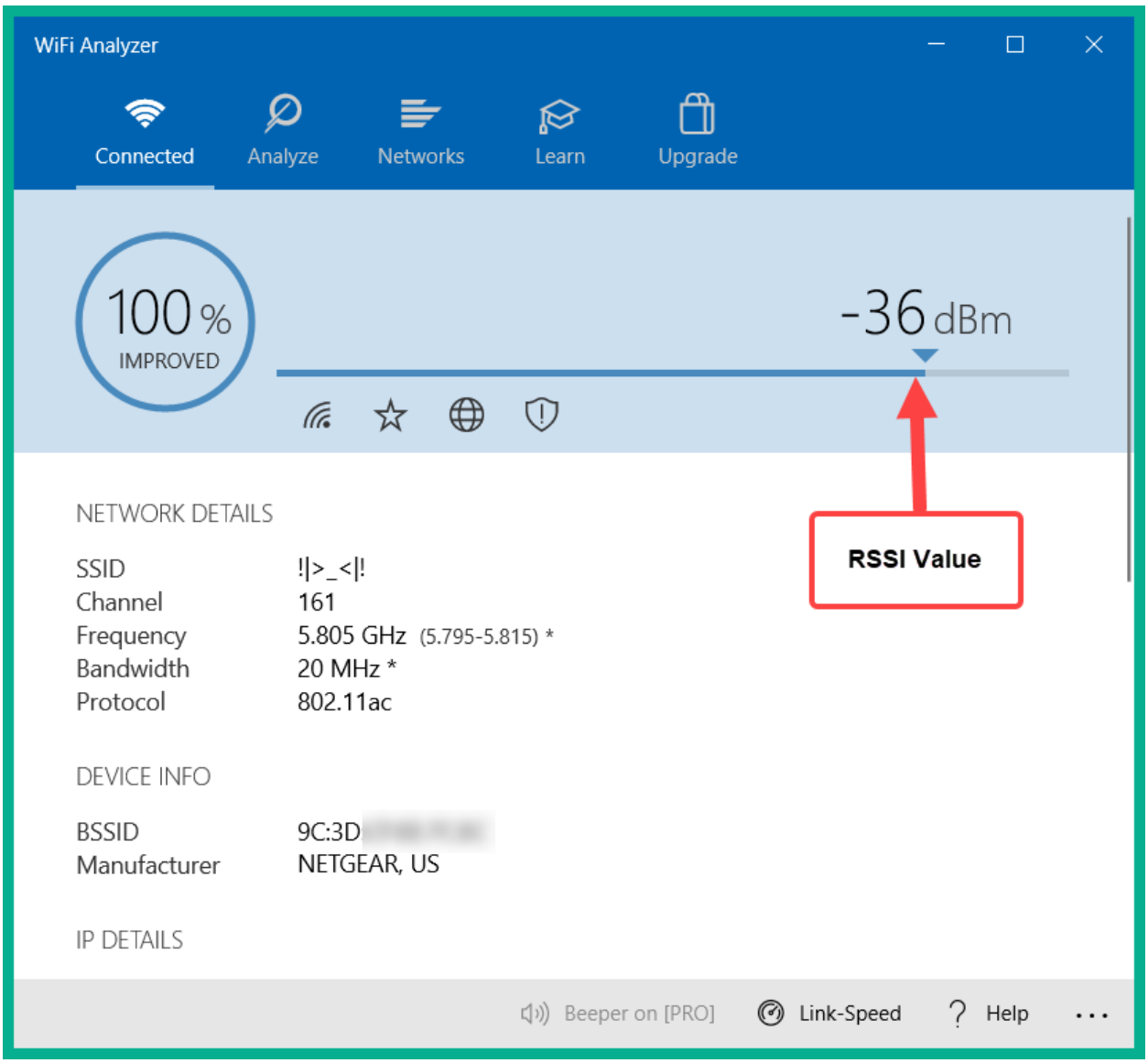
WiFi Analyzer
Connected
Analyze
Networks
Learn
Upgrade
100 %
IMPROVED
-36 dBm
RSSI Value
NETWORK DETAILS
SSID
!|>_<|!
Channel
161
Frequency
5.805 GHz (5.795-5.815) *
Bandwidth
20 MHz *
Protocol
802.11ac
DEVICE INFO
BSSID
9C:3D
Manufacturer
NETGEAR, US
IP DETAILS
Beeper on [PRO]
Link-Speed
Help

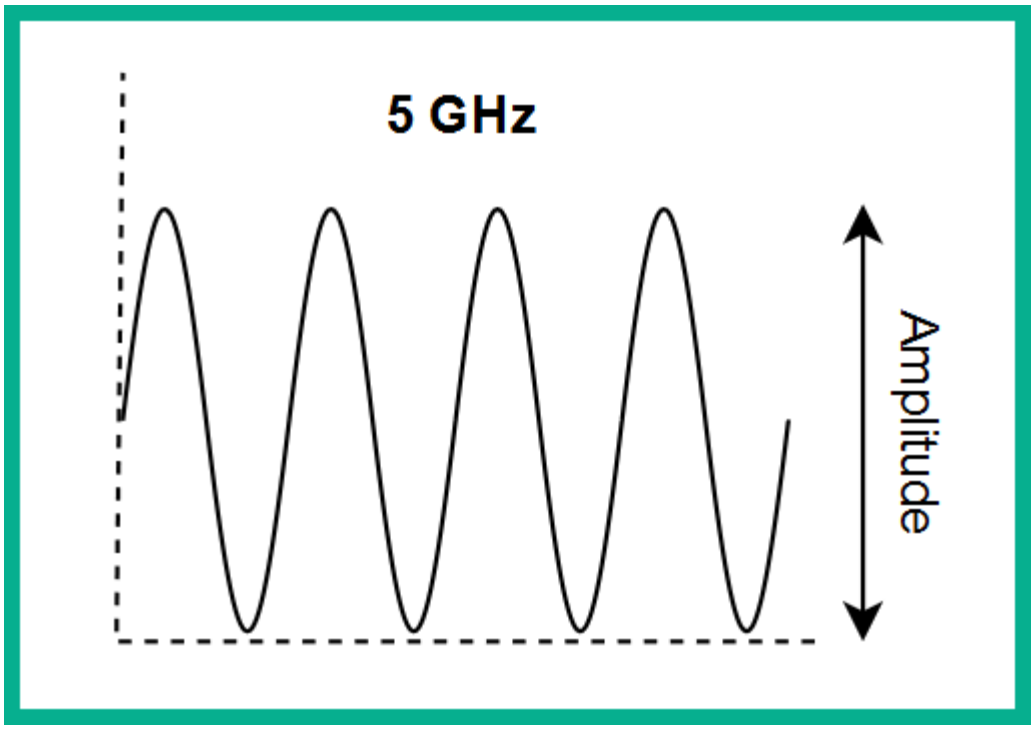
5 GHz
Amplitude

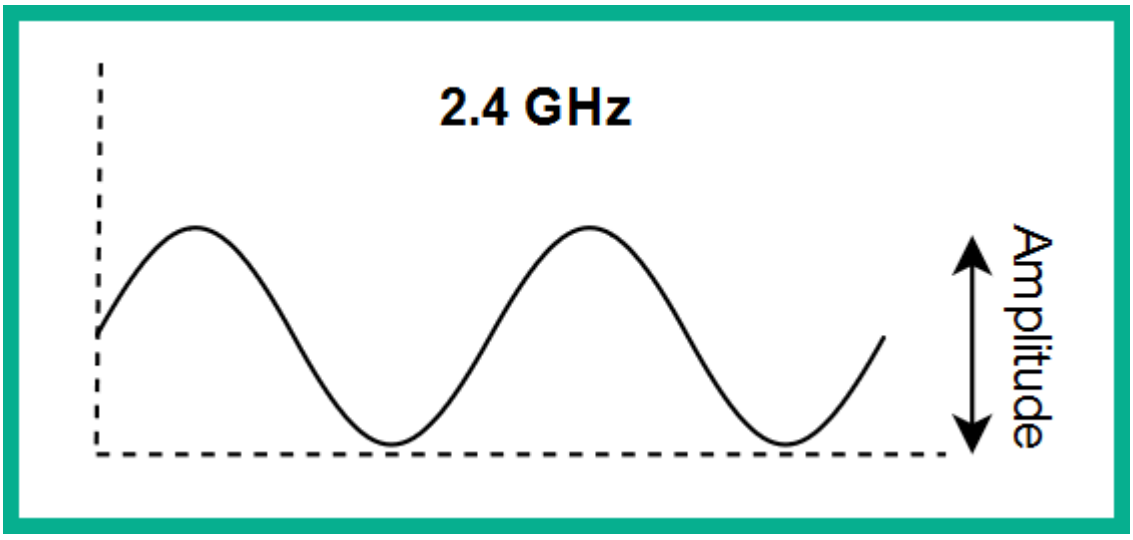
2.4 GHz
Amplitude

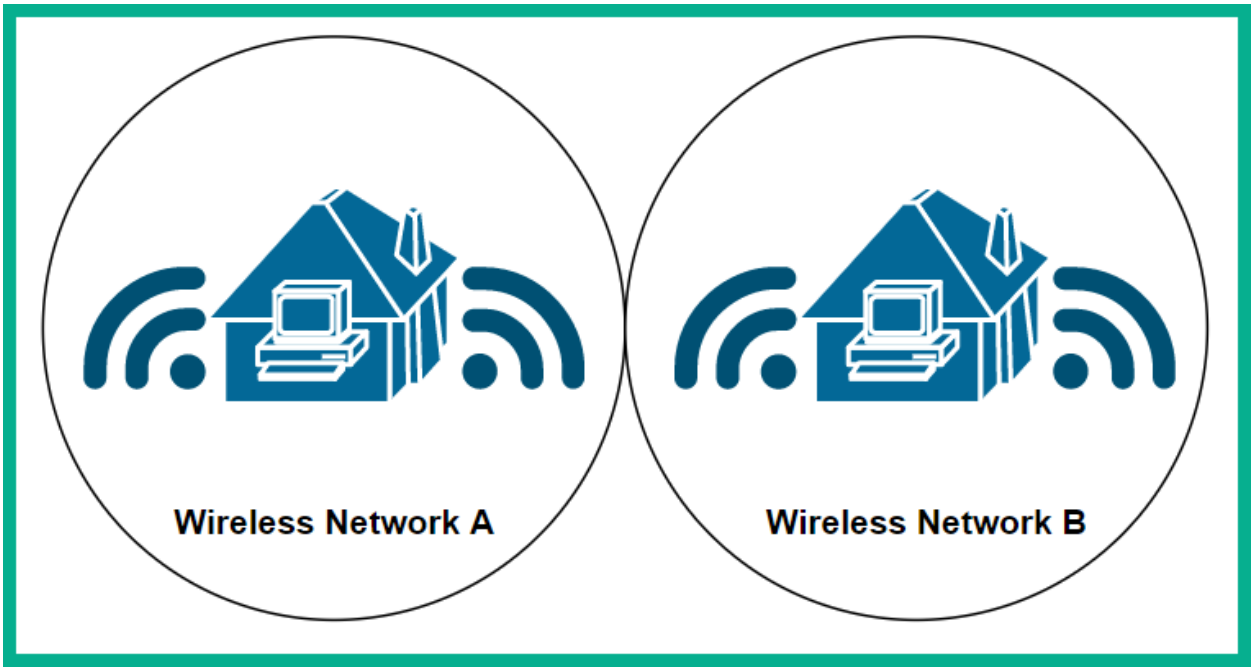

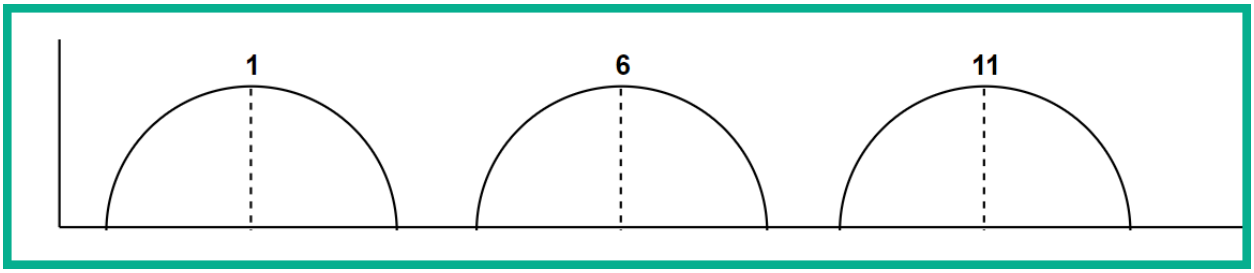

IEEE Standard	Frequency	Maximum Bandwidth	Backward Compatibility
802.11b	2.4 GHz	11 Mbps	n/a
802.11a	5 GHz	54 Mbps	n/a
802.11g	2.4 GHz	54 Mbps	802.11b
802.11n	2.4 GHz and 5 GHz	300 Mbps	802.11a/b/g
802.11ac	5 GHz	7 Gbps	802.11a/n
802.11ax (Wi-Fi 6)	2.4 GHz and 5 GHz	4.8 Gbps	802.11b/g/n/ac

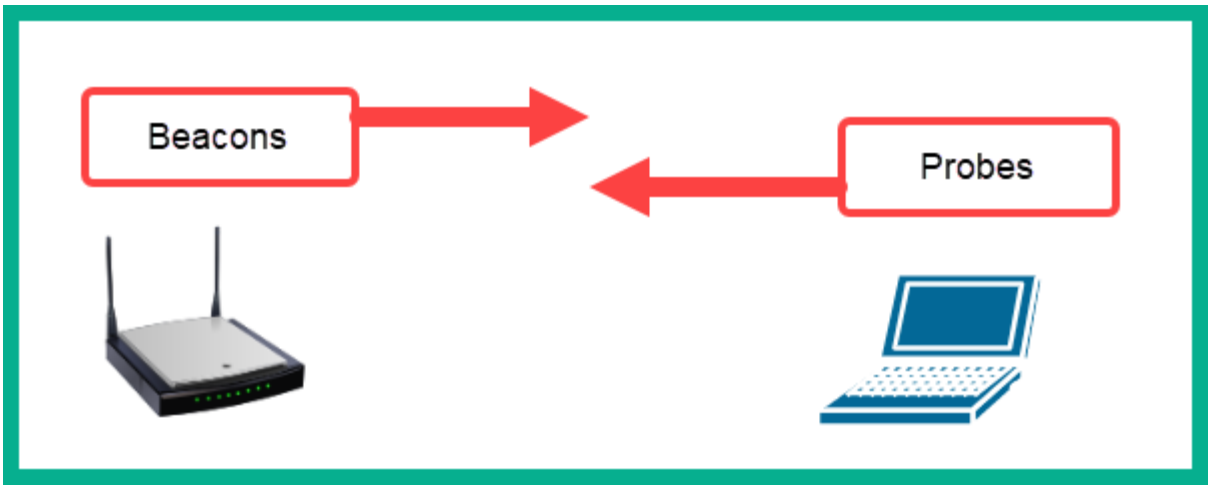


```
C:\>netsh wlan show interface

There is 1 interface on the system:

    Name                   : Wi-Fi
    Description            : Intel(R) Dual Band Wireless-AC 3165
    GUID                   : d7aaa22a-
    Physical address       : ee:80:
    State                  : connected
    SSID                   : !|>_<|!
    BSSID                  : 9c:3d:
    Network type           : Infrastructure
    Radio type             : 802.11ac
    Authentication         : WPA2-Personal
    Cipher                 : CCMP
    Connection mode        : Auto Connect
    Channel                : 161
    Receive rate (Mbps)    : 433.3
    Transmit rate (Mbps)   : 433.3
    Signal                 : 99%
    Profile                : !|>_<|!

    Hosted network status  : Not available
```

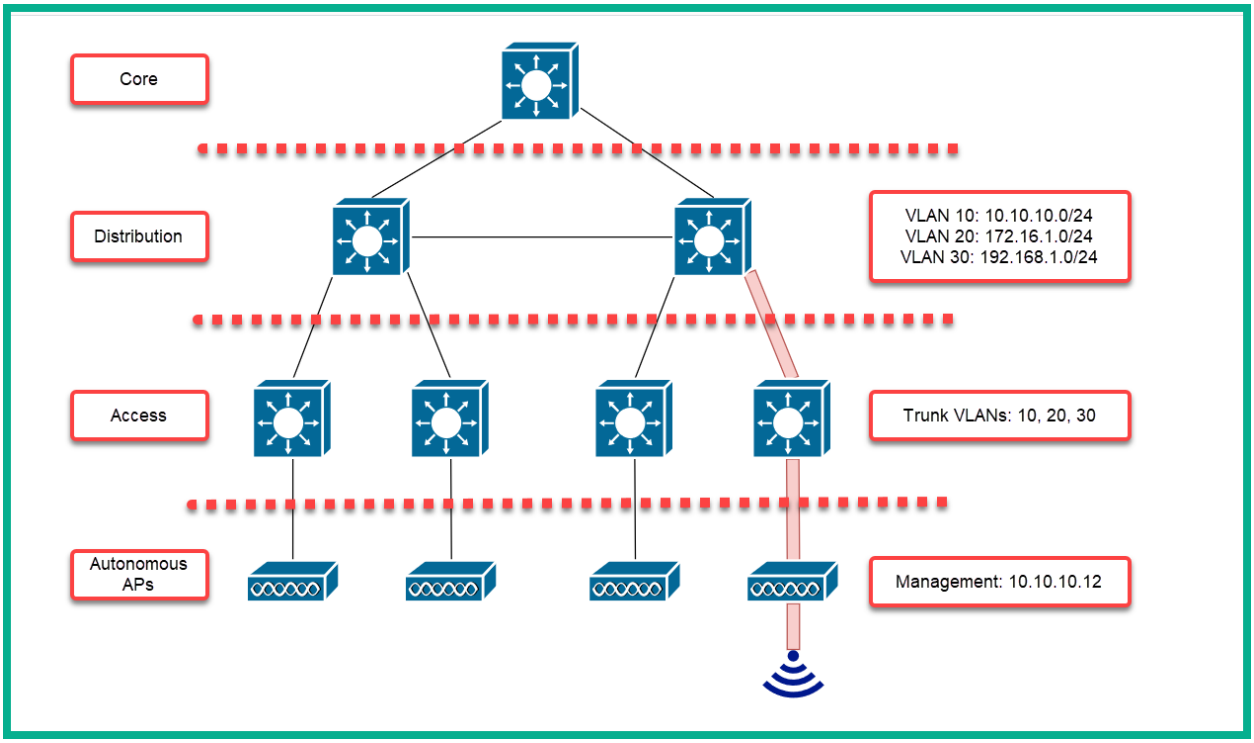
Core
Distribution
Access
Autonomous APs
VLAN 10: 10.10.10.0/24
VLAN 20: 172.16.1.0/24
VLAN 30: 192.168.1.0/24
Trunk VLANs: 10, 20, 30
Management: 10.10.10.12

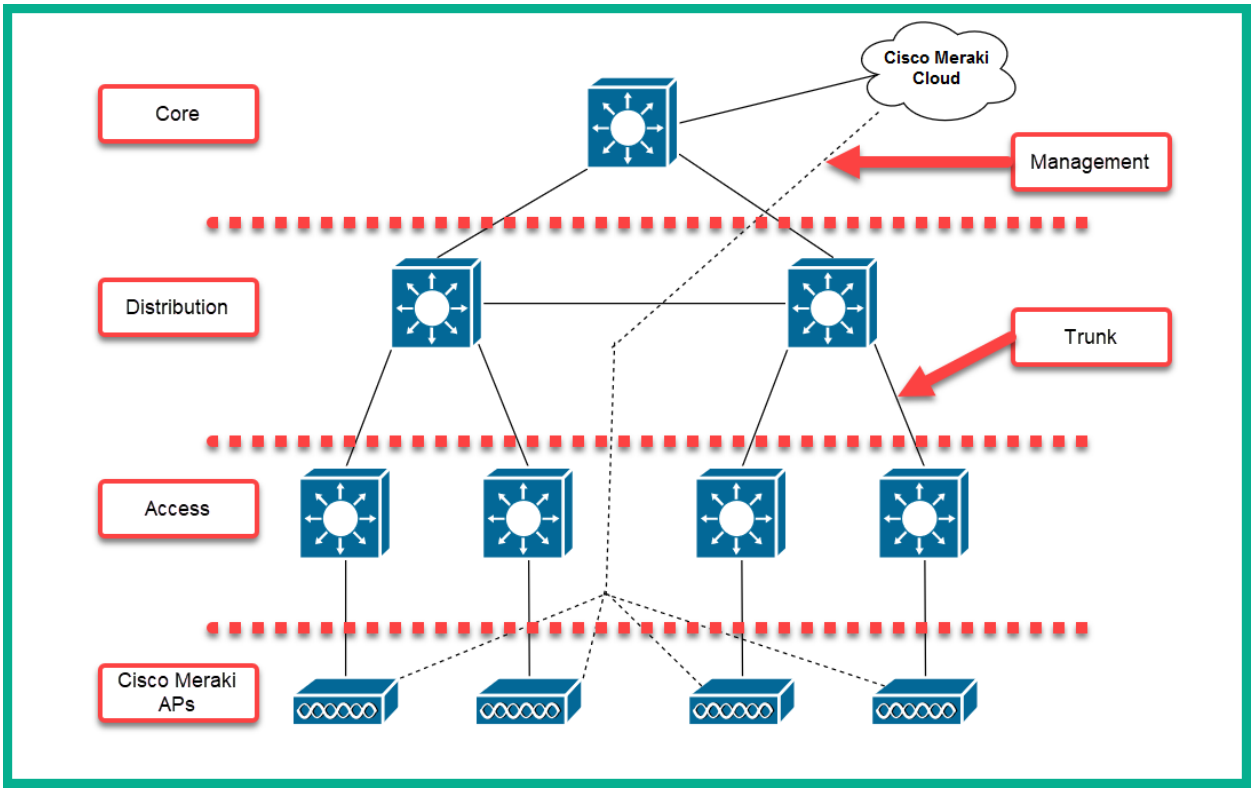
Cisco Meraki Cloud
Core
Management
Distribution
Trunk
Access
Cisco Meraki APs

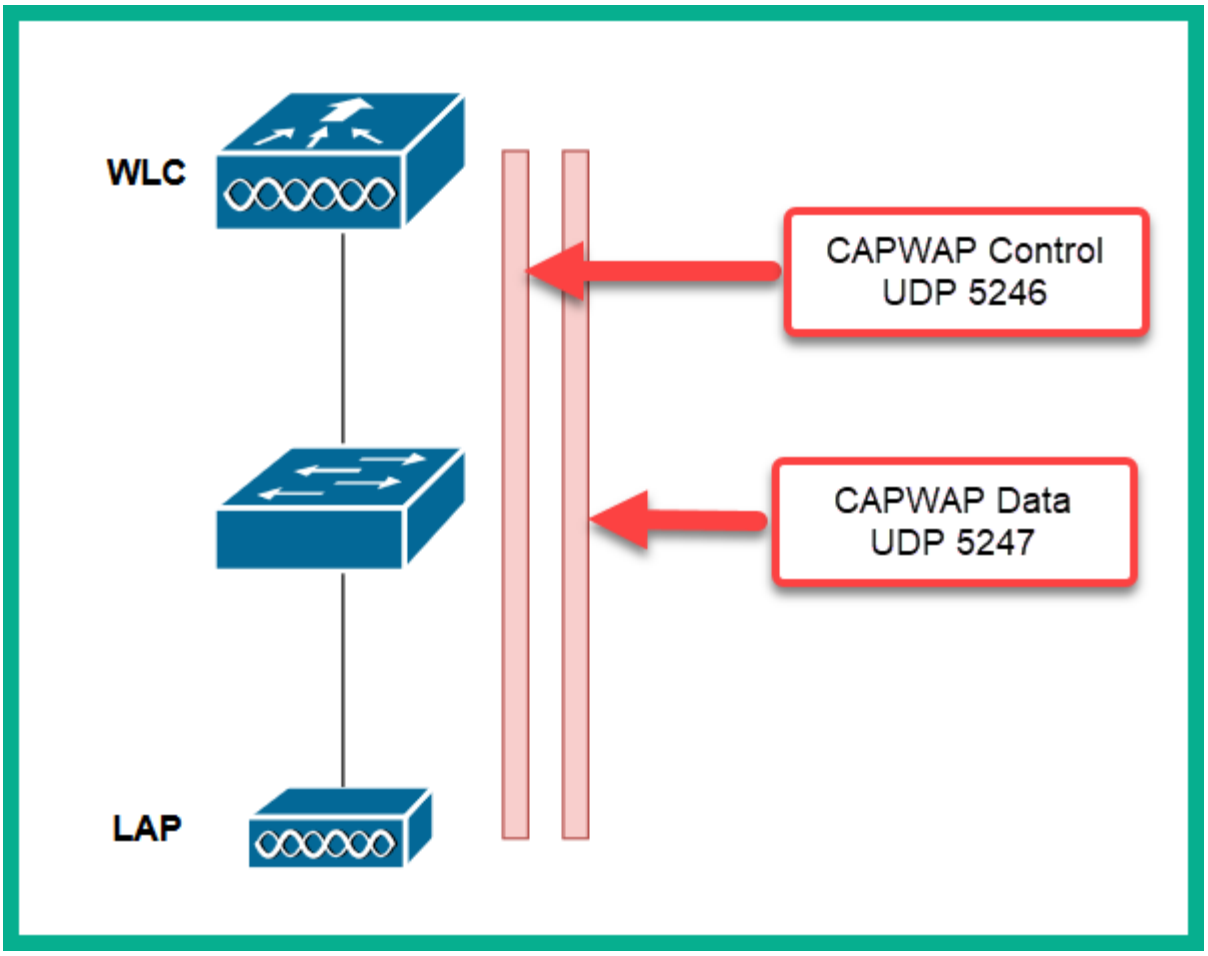
WLC
CAPWAP Control
UDP 5246
CAPWAP Data
UDP 5247
LAP

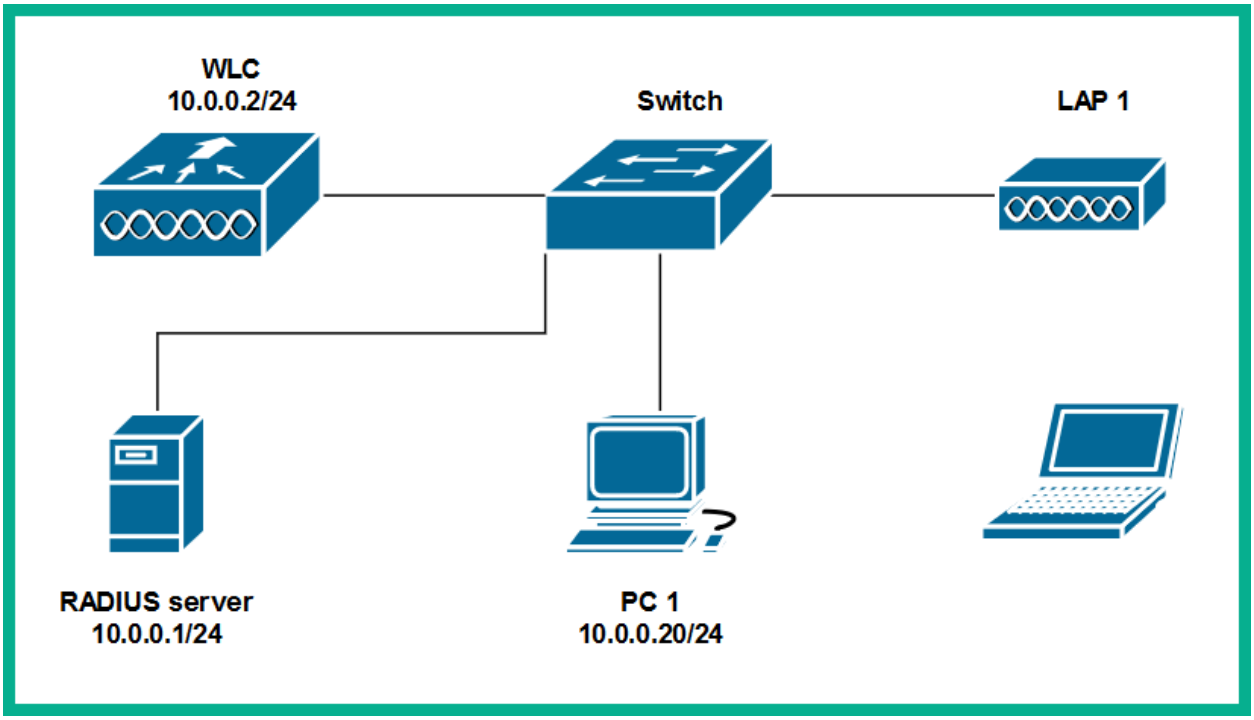
WLC
10.0.0.2/24
Switch
LAP 1
RADIUS server
10.0.0.1/24
PC 1
10.0.0.20/24

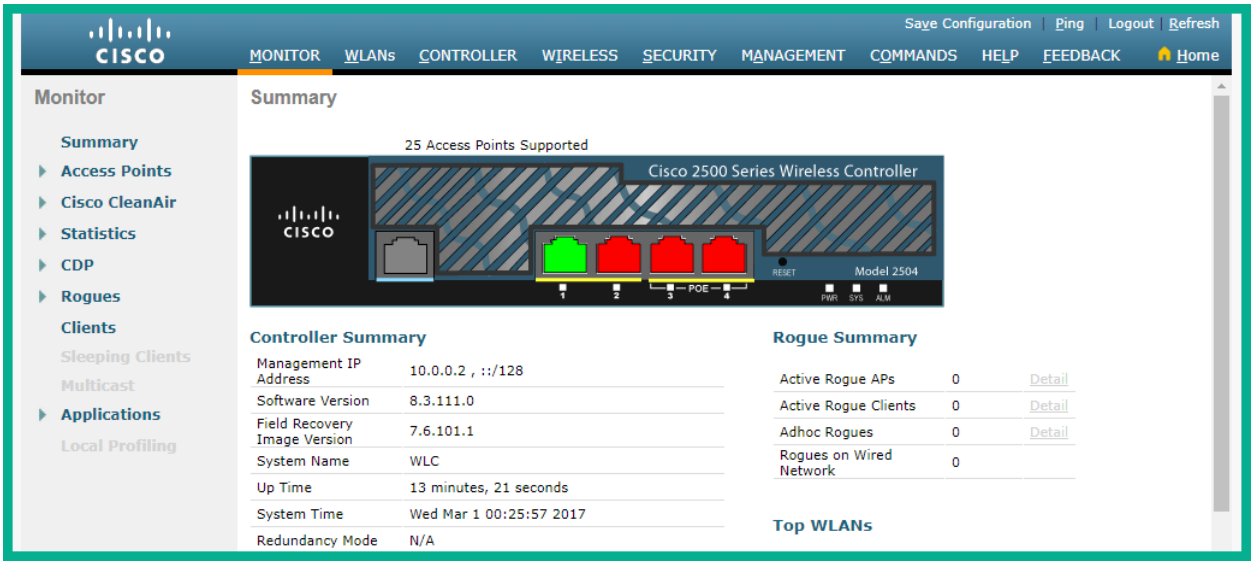
Save Configuration | Ping | Logout | Refresh
MONITOR WLANs CONTROLLER WIRELESS SECURITY MANAGEMENT COMMANDS HELP FEEDBACK Home
Monitor
Summary
Access Points
Cisco CleanAir
Statistics
CDP
Rogues
Clients
Sleeping Clients
Multicast
Applications
Local Profiling
Summary
25 Access Points Supported
Cisco 2500 Series Wireless Controller
Model 2504
Controller Summary
Management IP Address 10.0.0.2 , ::/128
Software Version 8.3.111.0
Field Recovery Image Version 7.6.101.1
System Name WLC
Up Time 13 minutes, 21 seconds
System Time Wed Mar 1 00:25:57 2017
Redundancy Mode N/A
Rogue Summary
Active Rogue APs 0 Detail
Active Rogue Clients 0 Detail
Adhoc Rogues 0 Detail
Rogues on Wired Network 0
Top WLANs

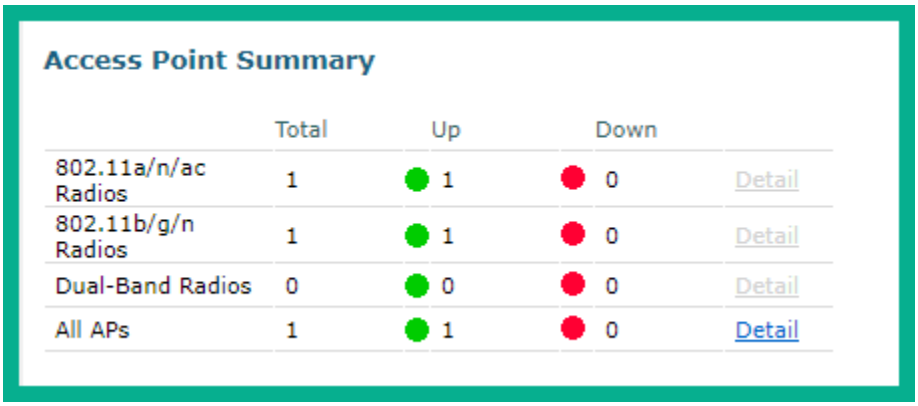
Access Point Summary
Total Up Down
802.11a/n/ac Radios 1 1 0 Detail
802.11b/g/n Radios 1 1 0 Detail
Dual-Band Radios 0 0 0 Detail
All APs 1 1 0 Detail

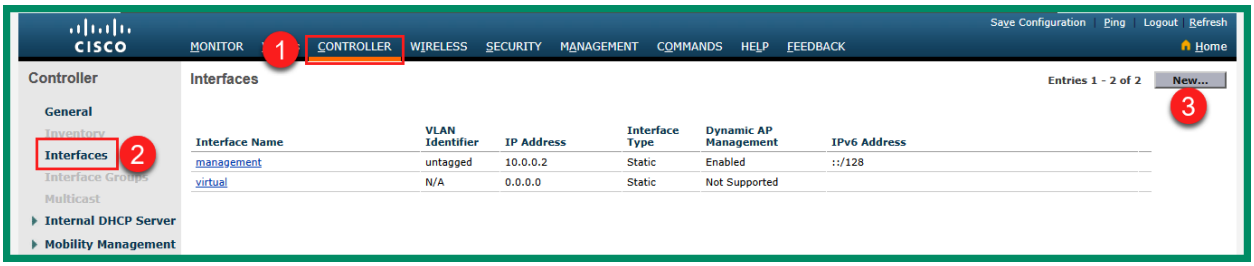
Save Configuration | Ping | Logout | Refresh
MONITOR CONTROLLER WIRELESS SECURITY MANAGEMENT COMMANDS HELP FEEDBACK Home
1
Controller
General
Inventory
Interfaces
2
Interface Groups
Multicast
Internal DHCP Server
Mobility Management
Interfaces
Entries 1 - 2 of 2
New...
3
Interface Name VLAN Identifier IP Address Interface Type Dynamic AP Management IPv6 Address
management untagged 10.0.0.2 Static Enabled ::/128
virtual N/A 0.0.0.0 Static Not Supported

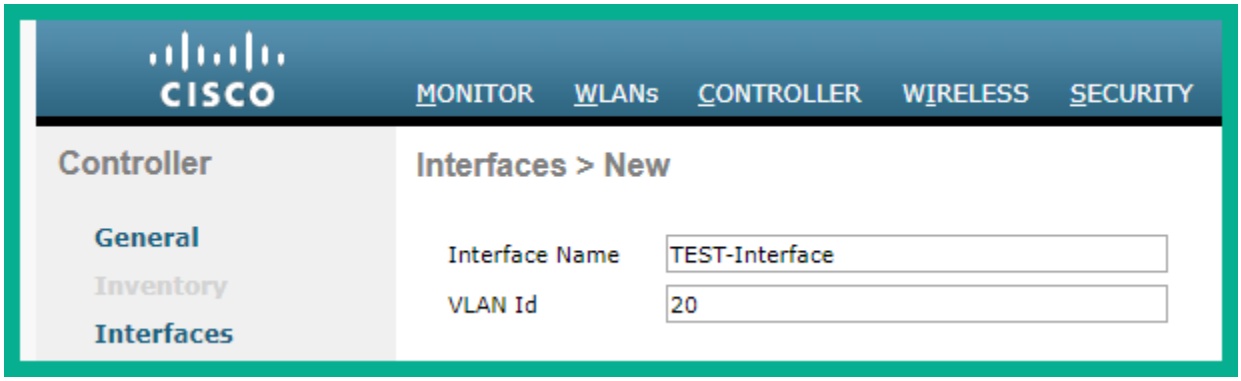
MONITOR WLANs CONTROLLER WIRELESS SECURITY
Controller
General
Inventory
Interfaces
Interfaces > New
Interface Name TEST-Interface
VLAN Id 20

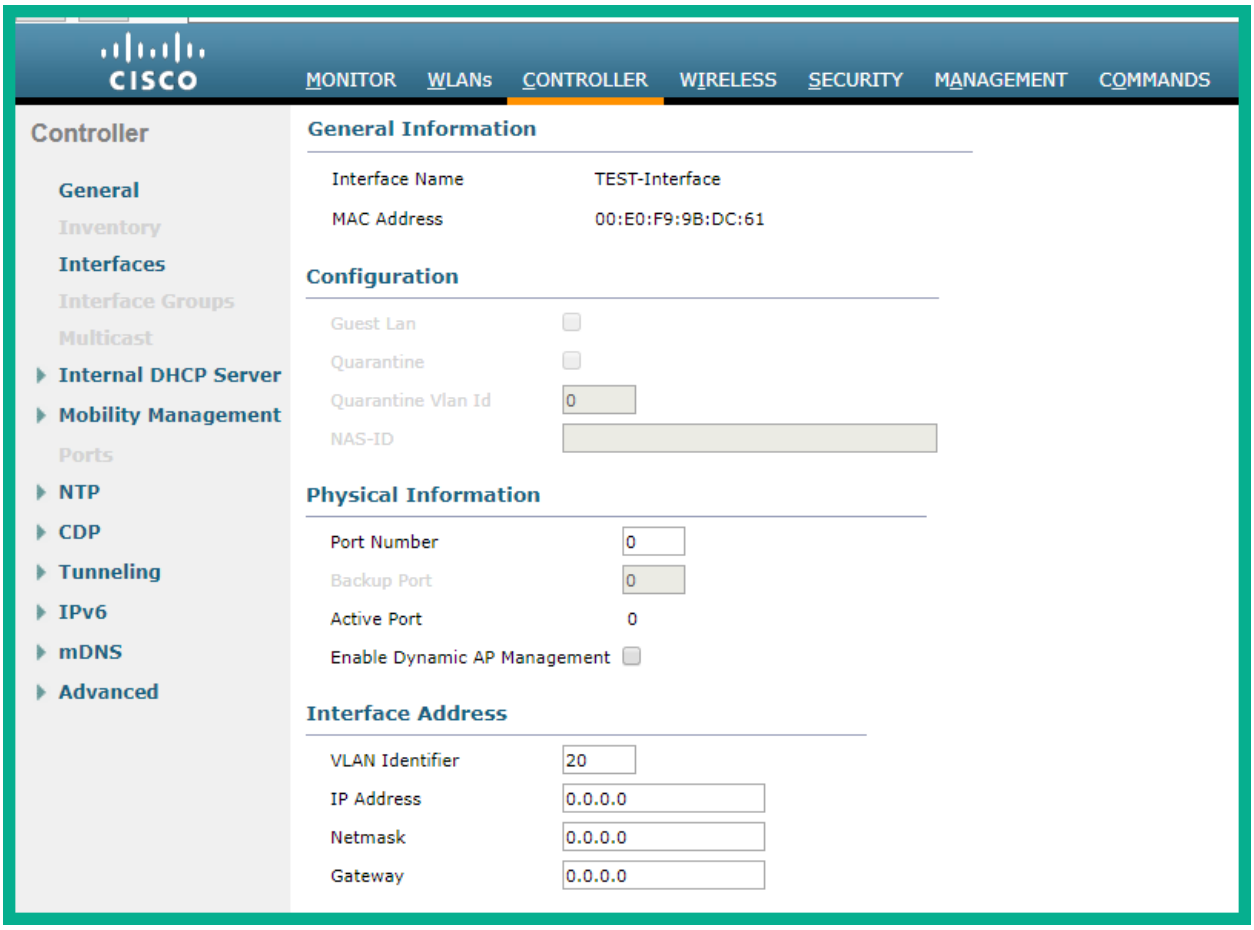
CISCO
MONITOR WLANs CONTROLLER WIRELESS SECURITY MANAGEMENT COMMANDS
Controller
General
Inventory
Interfaces
Interface Groups
Multicast
Internal DHCP Server
Mobility Management
Ports
NTP
CDP
Tunneling
IPv6
mDNS
Advanced
General Information
Interface Name TEST-Interface
MAC Address 00:E0:F9:9B:DC:61
Configuration
Guest Lan
Quarantine
Quarantine Vlan Id 0
NAS-ID
Physical Information
Port Number 0
Backup Port 0
Active Port 0
Enable Dynamic AP Management
Interface Address
VLAN Identifier 20
IP Address 0.0.0.0
Netmask 0.0.0.0
Gateway 0.0.0.0

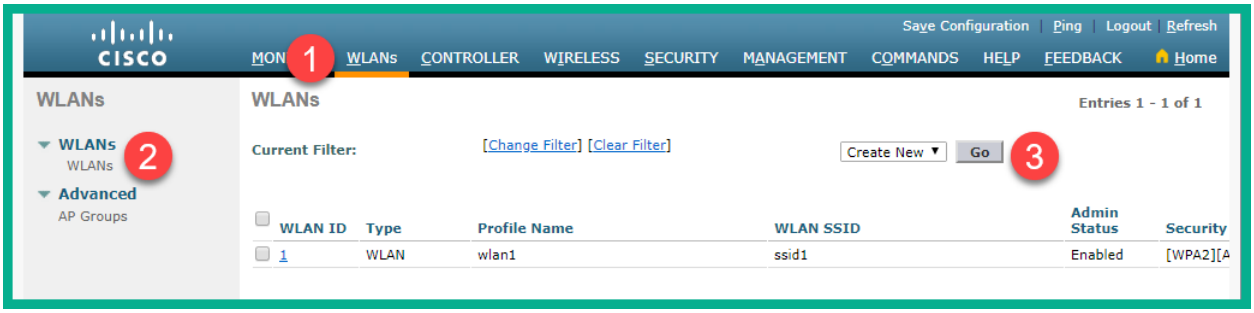
CISCO
Save Configuration | Ping | Logout | Refresh
MON 1 WLANs CONTROLLER WIRELESS SECURITY MANAGEMENT COMMANDS HELP FEEDBACK Home
WLANs
WLANs 2
WLANs
Advanced
AP Groups
WLANs
Entries 1 - 1 of 1
Current Filter:
[Change Filter] [Clear Filter]
Create New Go 3
WLAN ID Type Profile Name WLAN SSID Admin Status Security
1 WLAN wlan1 ssid1 Enabled [WPA2][A

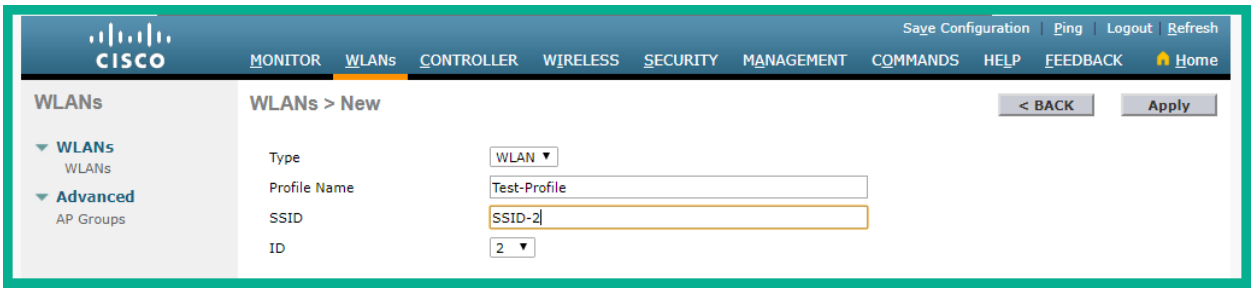
CISCO
Save Configuration | Ping | Logout | Refresh
MONITOR WLANs CONTROLLER WIRELESS SECURITY MANAGEMENT COMMANDS HELP FEEDBACK Home
WLANs
WLANs
WLANs
Advanced
AP Groups
WLANs > New
< BACK
Apply
Type WLAN
Profile Name Test-Profile
SSID SSID-2
ID 2

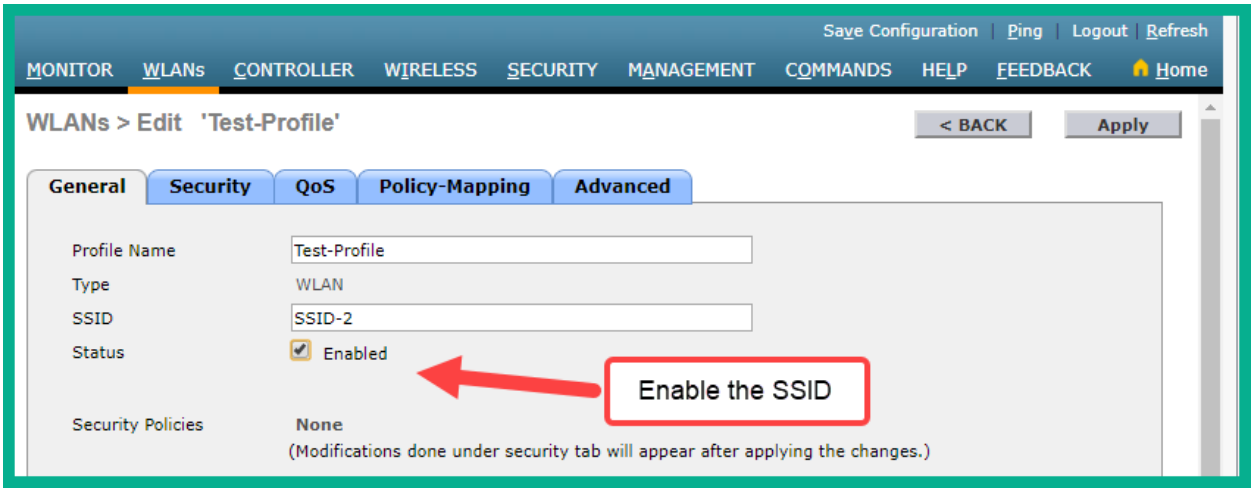
Save Configuration | Ping | Logout | Refresh
MONITOR WLANs CONTROLLER WIRELESS SECURITY MANAGEMENT COMMANDS HELP FEEDBACK Home
WLANs > Edit 'Test-Profile'
< BACK
Apply
General
Security
QoS
Policy-Mapping
Advanced
Profile Name
Test-Profile
Type
WLAN
SSID
SSID-2
Status
Enabled
Enable the SSID
Security Policies
None
(Modifications done under security tab will appear after applying the changes.)

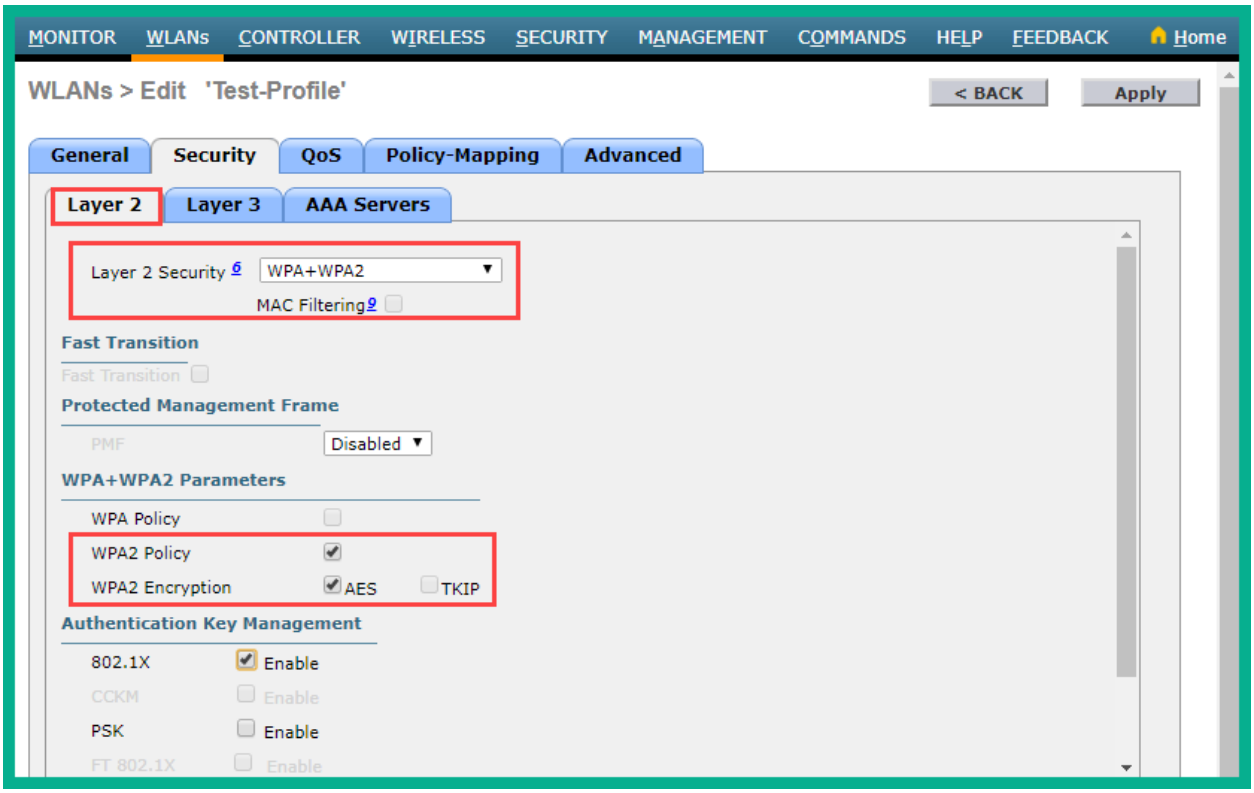
MONITOR WLANs CONTROLLER WIRELESS SECURITY MANAGEMENT COMMANDS HELP FEEDBACK Home
WLANs > Edit 'Test-Profile'
< BACK
Apply
General
Security
QoS
Policy-Mapping
Advanced
Layer 2
Layer 3
AAA Servers
Layer 2 Security
WPA+WPA2
MAC Filtering
Fast Transition
Fast Transition
Protected Management Frame
PMF
Disabled
WPA+WPA2 Parameters
WPA Policy
WPA2 Policy
WPA2 Encryption
AES
TKIP
Authentication Key Management
802.1X
Enable
CCKM
Enable
PSK
Enable
FT 802.1X
Enable

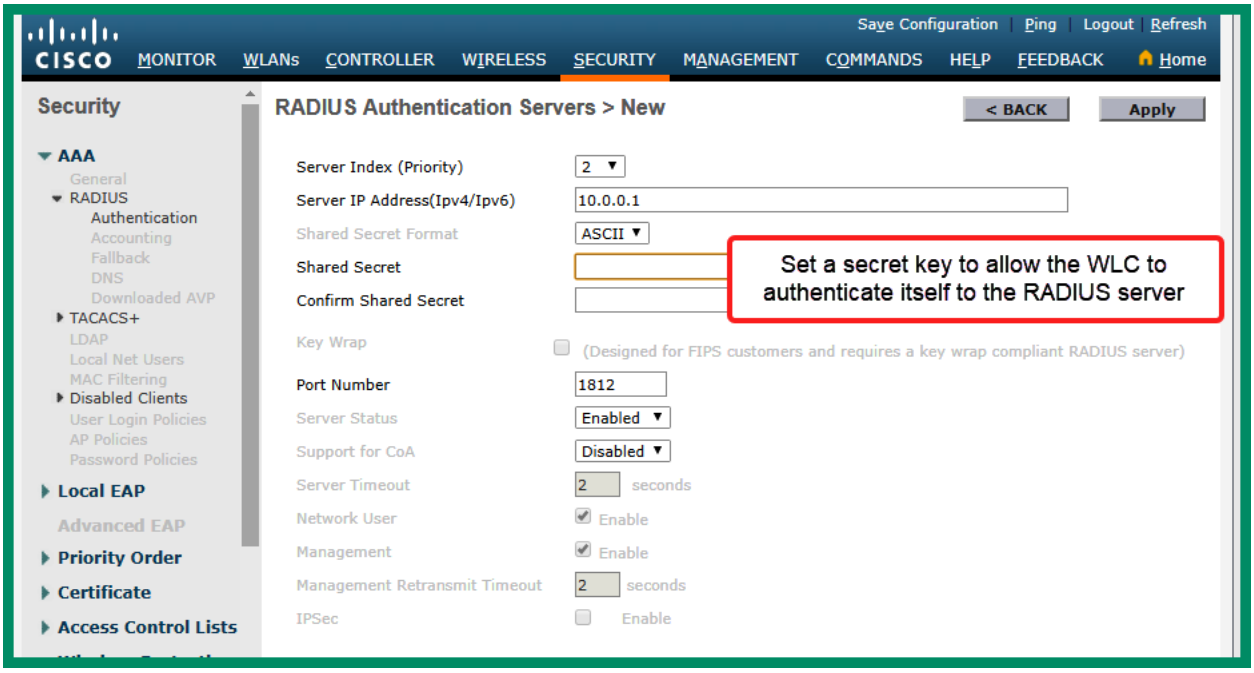
Save Configuration | Ping | Logout | Refresh
MONITOR WLANs CONTROLLER WIRELESS SECURITY MANAGEMENT COMMANDS HELP FEEDBACK Home
Security
RADIUS Authentication Servers > New
< BACK
Apply
Server Index (Priority)
Server IP Address(Ipv4/Ipv6)
Shared Secret Format
Shared Secret
Confirm Shared Secret
Key Wrap
(Designed for FIPS customers and requires a key wrap compliant RADIUS server)
Port Number
Server Status
Support for CoA
Server Timeout
seconds
Network User
Enable
Management
Enable
Management Retransmit Timeout
seconds
IPSec
Enable
AAA
General
RADIUS
Authentication
Accounting
Fallback
DNS
Downloaded AVP
TACACS+
LDAP
Local Net Users
MAC Filtering
Disabled Clients
User Login Policies
AP Policies
Password Policies
Local EAP
Advanced EAP
Priority Order
Certificate
Access Control Lists
Set a secret key to allow the WLC to authenticate itself to the RADIUS server

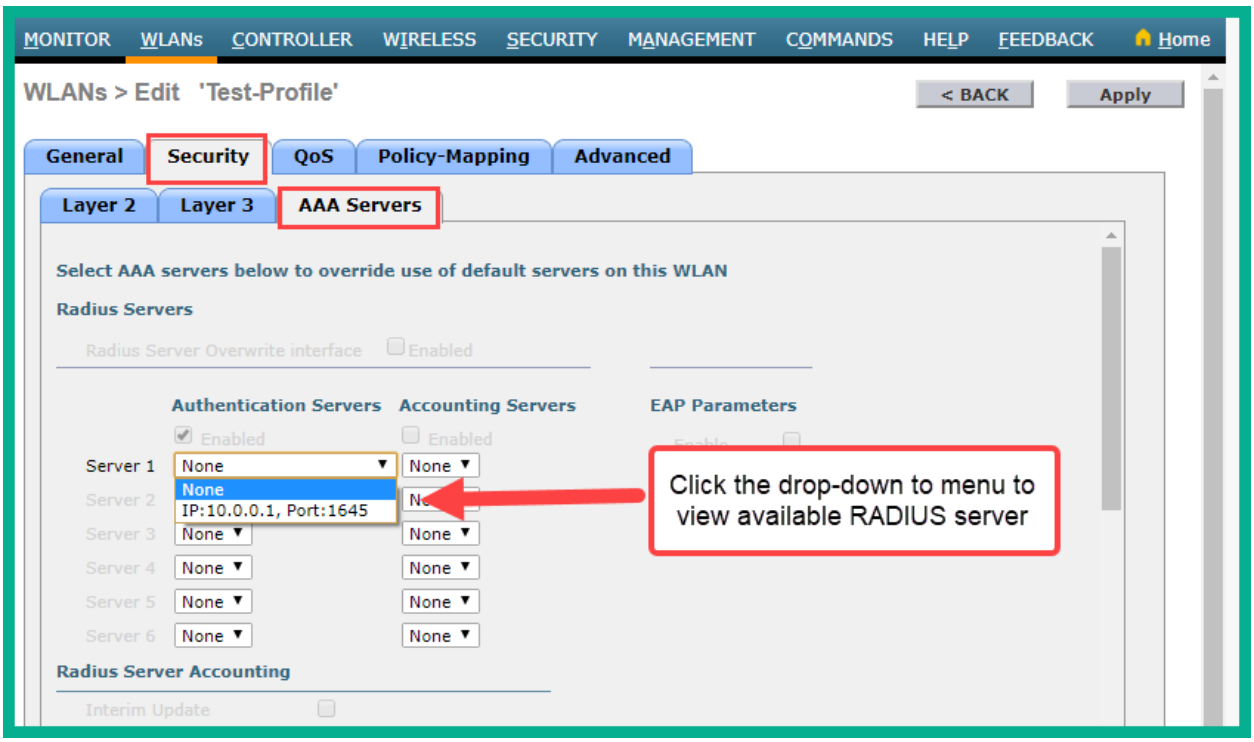
MONITOR WLANs CONTROLLER WIRELESS SECURITY MANAGEMENT COMMANDS HELP FEEDBACK Home
WLANs > Edit 'Test-Profile'
< BACK
Apply
General
Security
QoS
Policy-Mapping
Advanced
Layer 2
Layer 3
AAA Servers
Select AAA servers below to override use of default servers on this WLAN
Radius Servers
Radius Server Overwrite interface
Enabled
Authentication Servers
Accounting Servers
EAP Parameters
Enabled
Enabled
Server 1
None
None
IP:10.0.0.1, Port:1645
Server 2
Server 3
Server 4
Server 5
Server 6
Radius Server Accounting
Interim Update
Click the drop-down to menu to view available RADIUS server

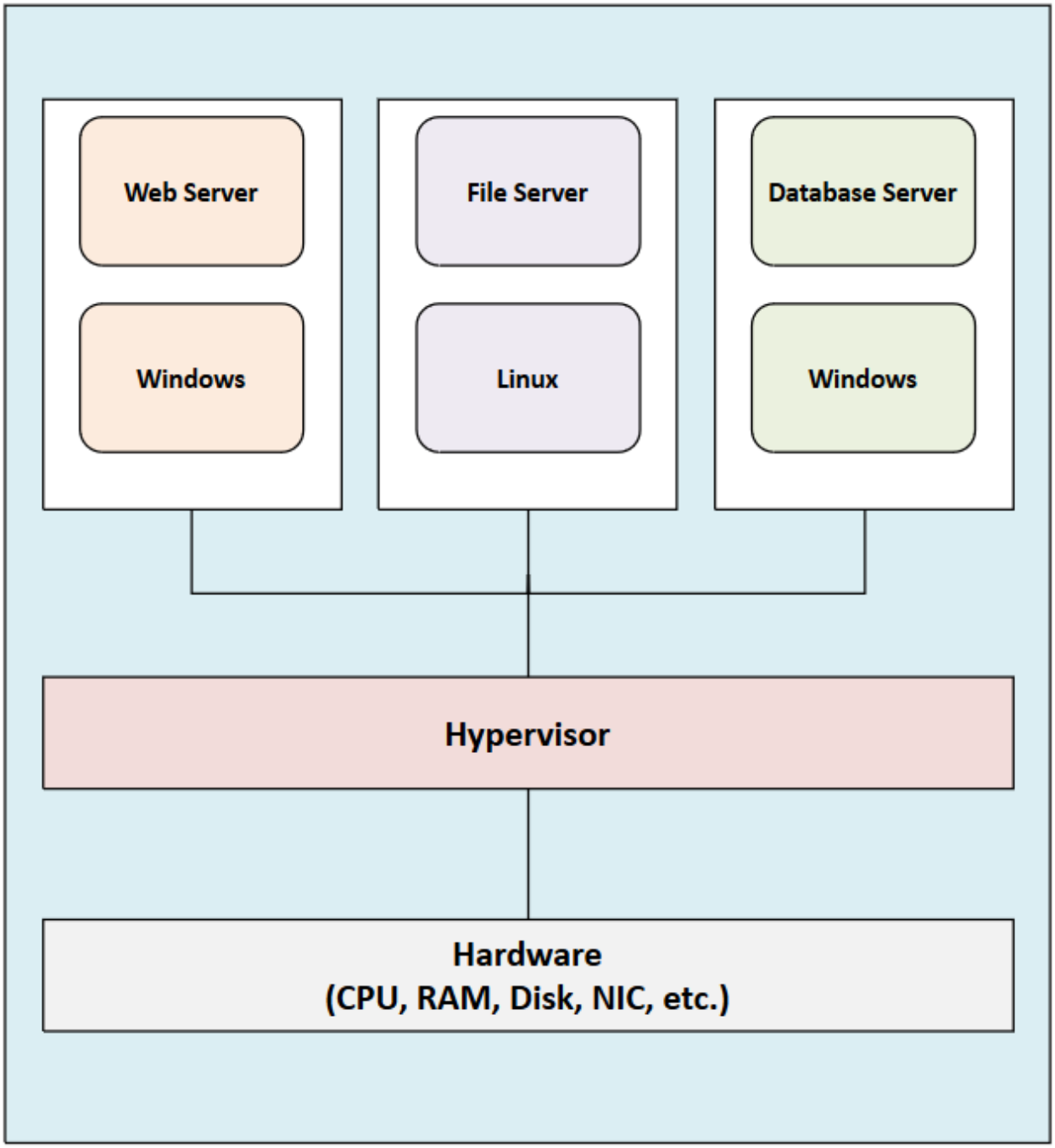
Web Server
Windows
File Server
Linux
Database Server
Windows
Hypervisor
Hardware
(CPU, RAM, Disk, NIC, etc.)

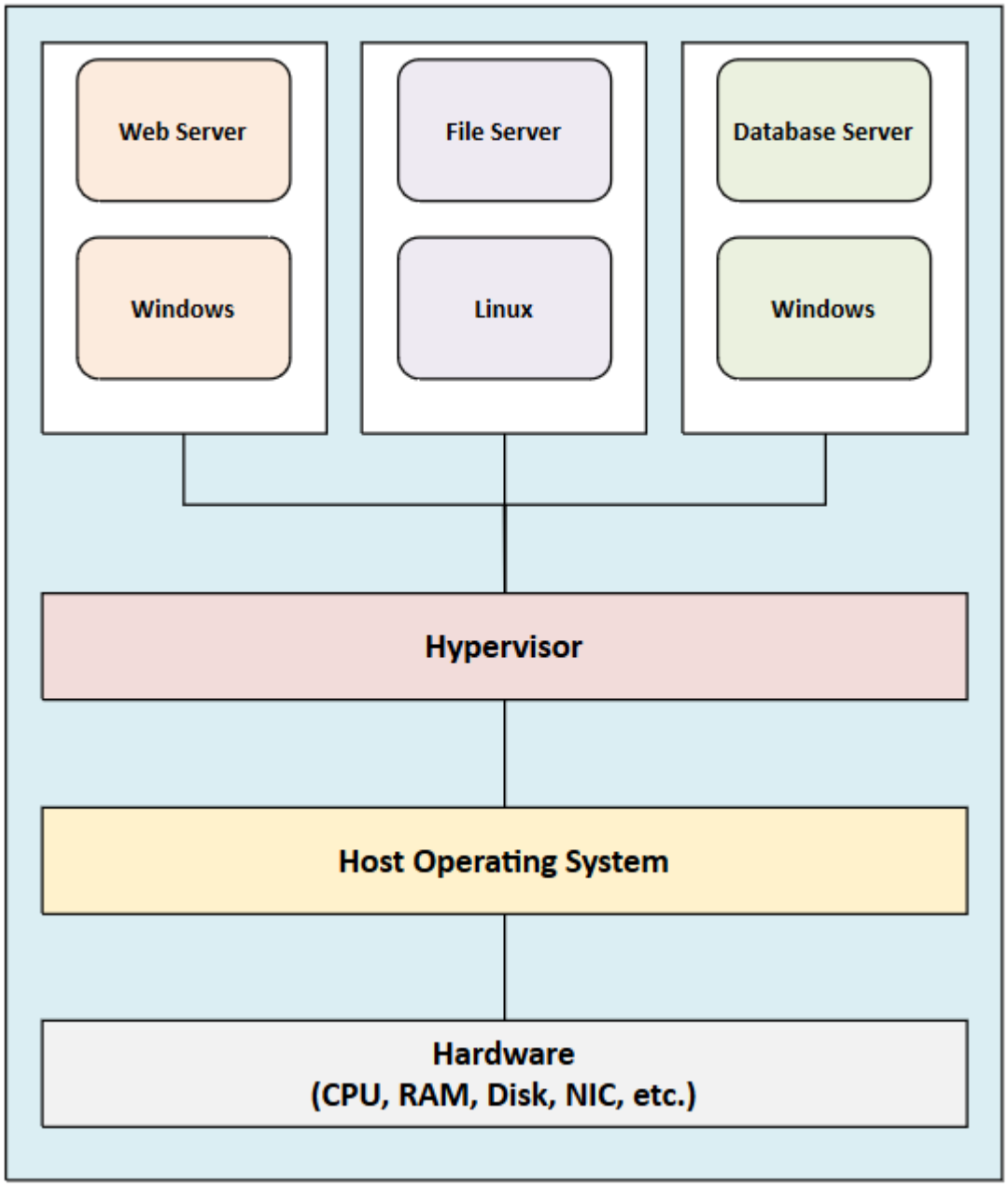
Web Server
Windows
File Server
Linux
Database Server
Windows
Hypervisor
Host Operating System
Hardware
(CPU, RAM, Disk, NIC, etc.)

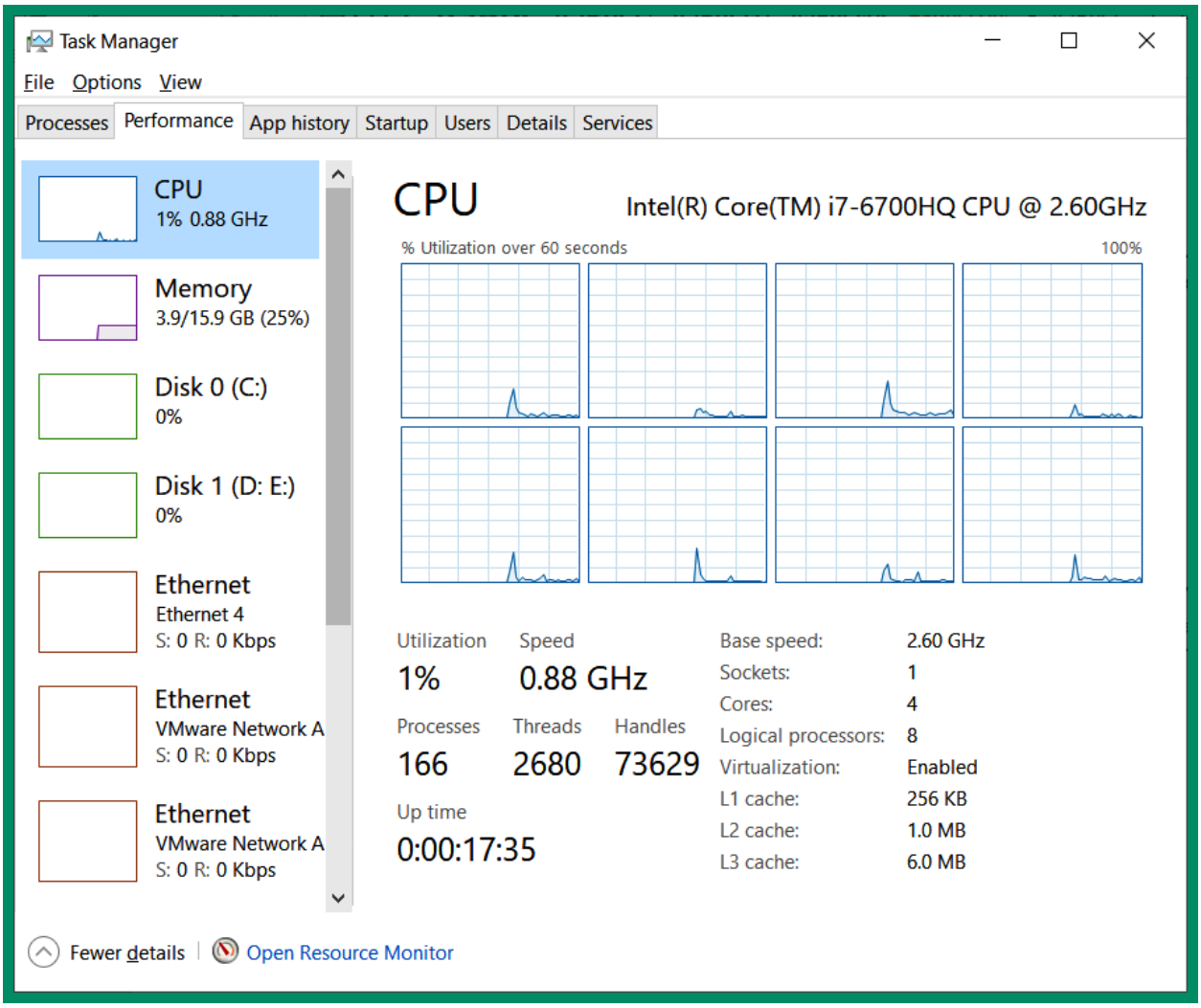
Task Manager
File Options View
Processes Performance App history Startup Users Details Services
CPU
1% 0.88 GHz
Memory
3.9/15.9 GB (25%)
Disk 0 (C:)
0%
Disk 1 (D: E:)
0%
Ethernet
Ethernet 4
S: 0 R: 0 Kbps
Ethernet
VMware Network A
S: 0 R: 0 Kbps
Ethernet
VMware Network A
S: 0 R: 0 Kbps
CPU
Intel(R) Core(TM) i7-6700HQ CPU @ 2.60GHz
% Utilization over 60 seconds
100%
Utilization
1%
Speed
0.88 GHz
Processes
166
Threads
2680
Handles
73629
Up time
0:00:17:35
Base speed: 2.60 GHz
Sockets: 1
Cores: 4
Logical processors: 8
Virtualization: Enabled
L1 cache: 256 KB
L2 cache: 1.0 MB
L3 cache: 6.0 MB
Fewer details
Open Resource Monitor

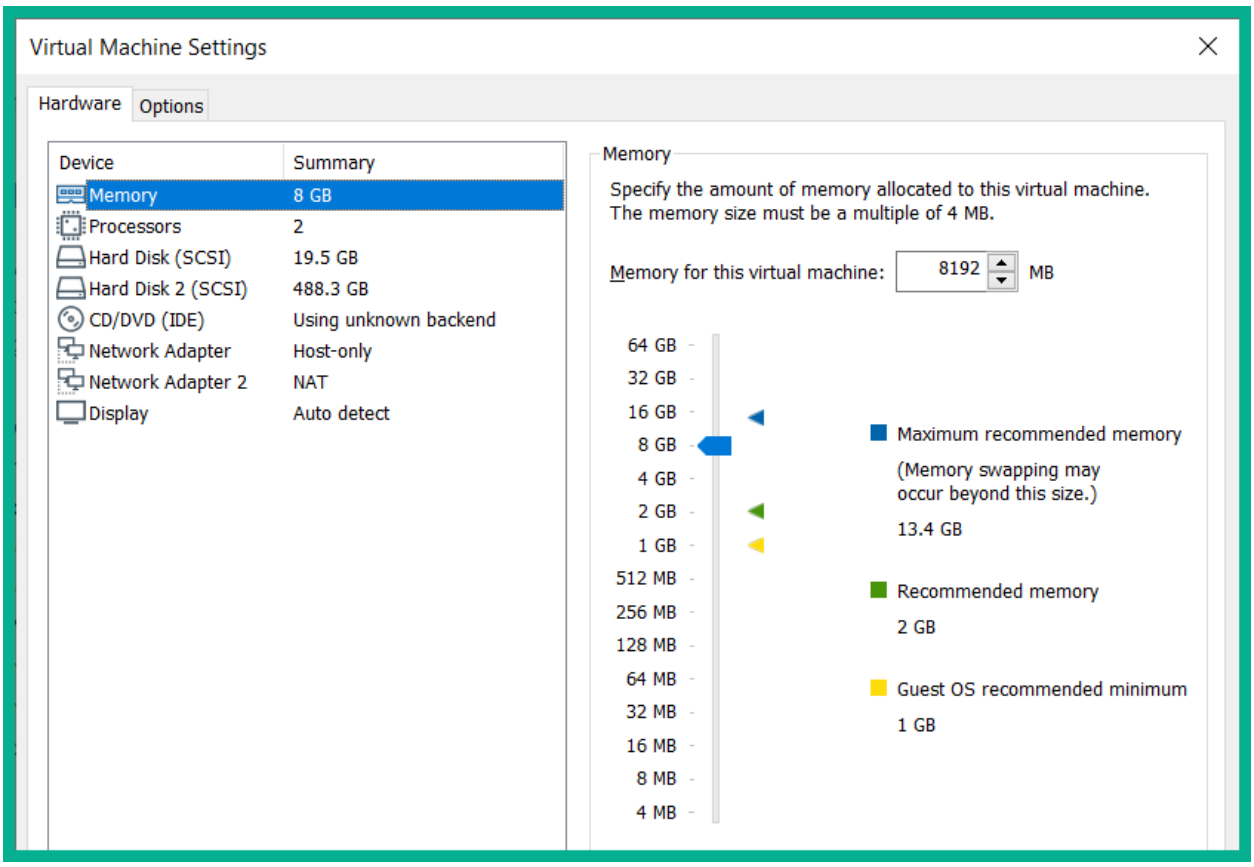
Virtual Machine Settings
Hardware
Options
Device
Summary
Memory
8 GB
Processors
2
Hard Disk (SCSI)
19.5 GB
Hard Disk 2 (SCSI)
488.3 GB
CD/DVD (IDE)
Using unknown backend
Network Adapter
Host-only
Network Adapter 2
NAT
Display
Auto detect
Memory
Specify the amount of memory allocated to this virtual machine.
The memory size must be a multiple of 4 MB.
Memory for this virtual machine:
8192
MB
64 GB
32 GB
16 GB
8 GB
4 GB
2 GB
1 GB
512 MB
256 MB
128 MB
64 MB
32 MB
16 MB
8 MB
4 MB
Maximum recommended memory
(Memory swapping may occur beyond this size.)
13.4 GB
Recommended memory
2 GB
Guest OS recommended minimum
1 GB

Chapter 5: Implementing VLANs, Layer 2 Discovery Protocols, and EtherChannels

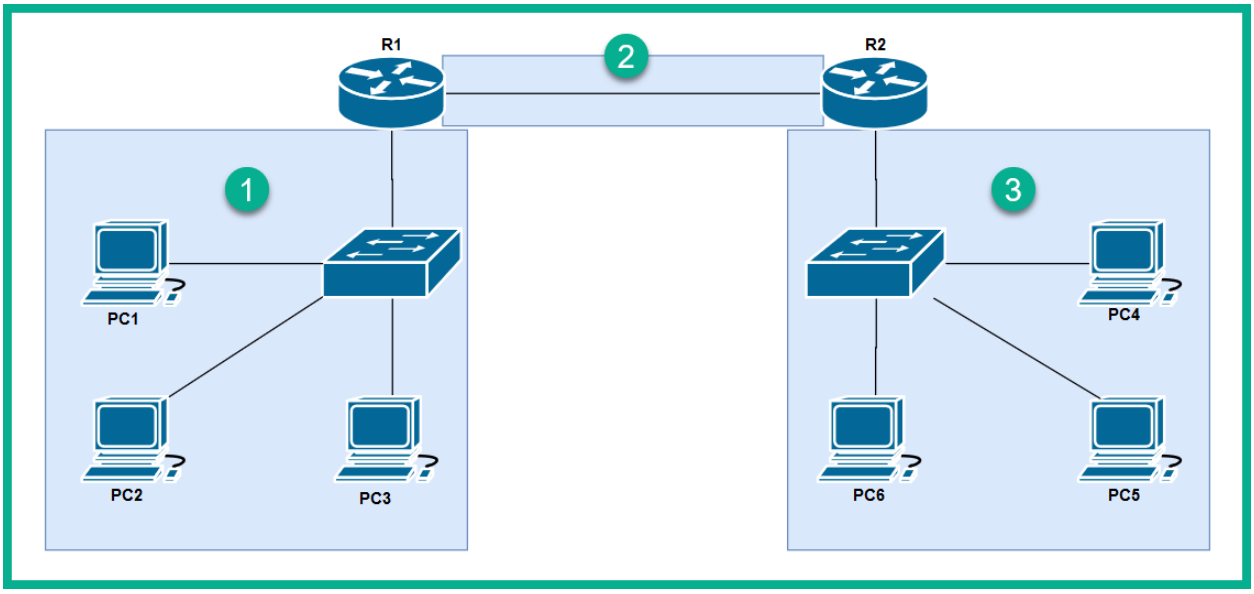

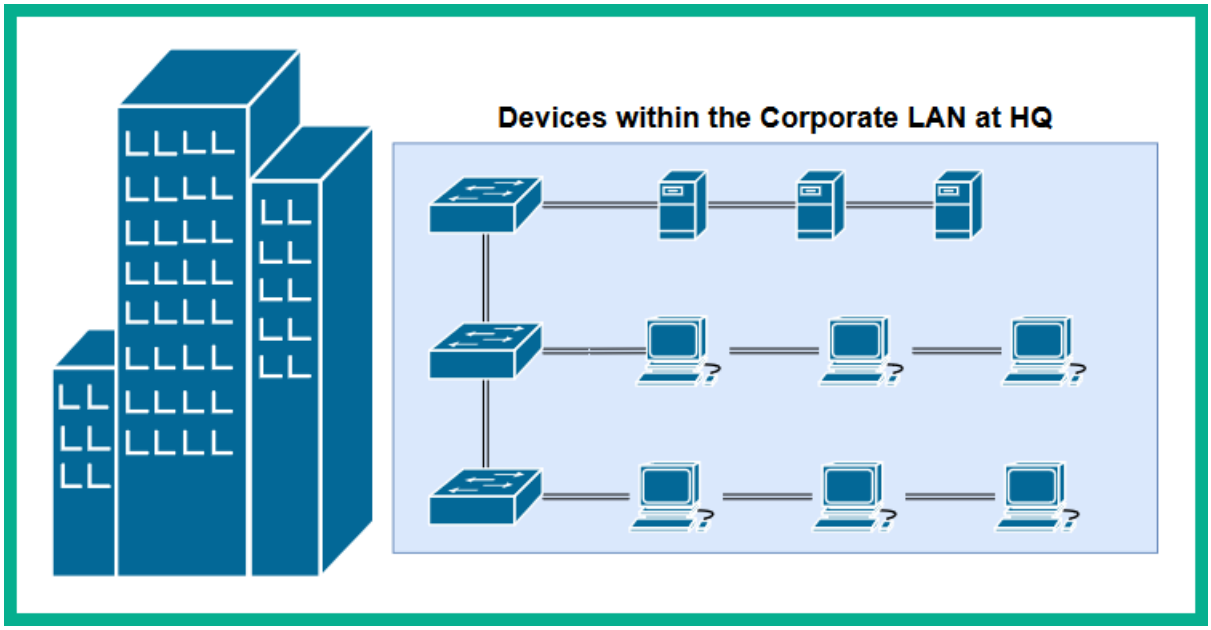

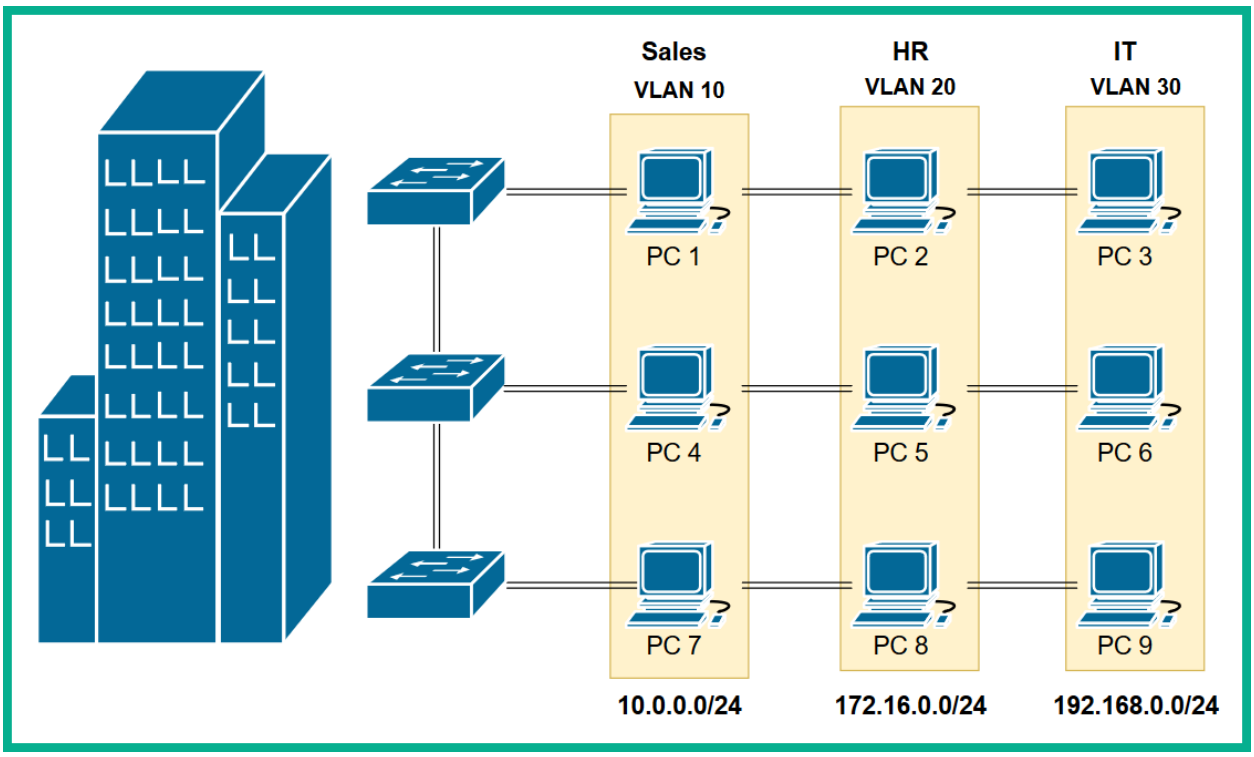
Sales
VLAN 10
HR
VLAN 20
IT
VLAN 30
PC 1
PC 2
PC 3
PC 4
PC 5
PC 6
PC 7
PC 8
PC 9
10.0.0.0/24
172.16.0.0/24
192.168.0.0/24

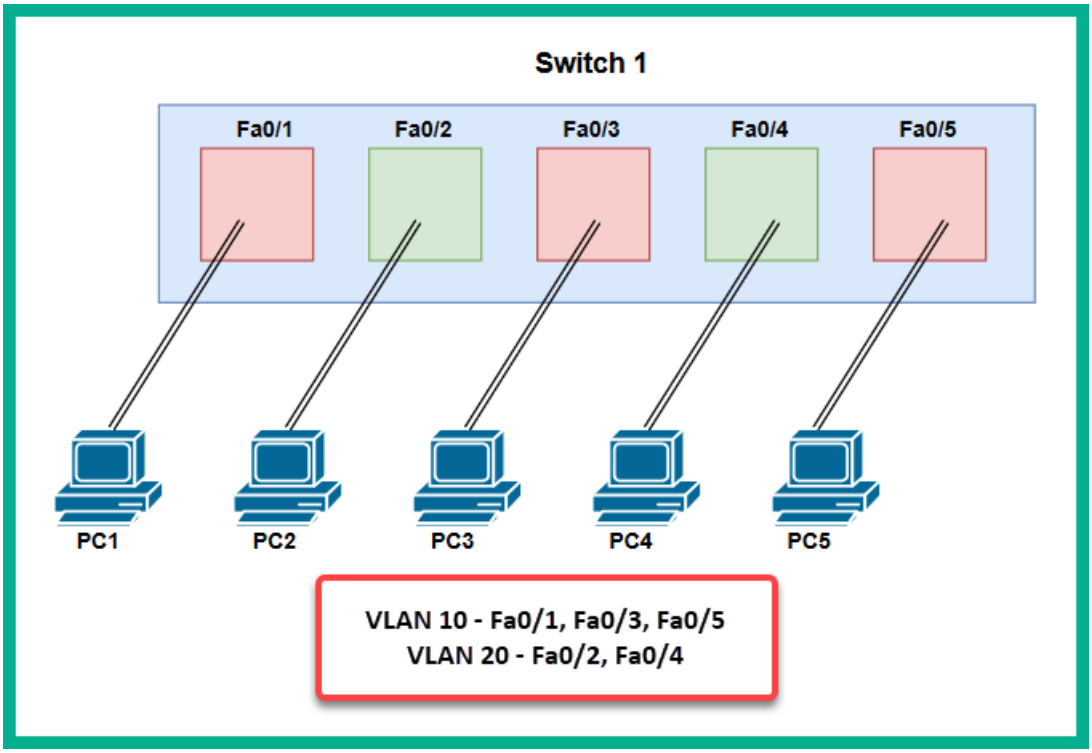
Switch 1
Fa0/1
Fa0/2
Fa0/3
Fa0/4
Fa0/5
PC1
PC2
PC3
PC4
PC5
VLAN 10 - Fa0/1, Fa0/3, Fa0/5
VLAN 20 - Fa0/2, Fa0/4

Source MAC	Destination MAC	802.1Q tag	Type/Length	Data	FCS

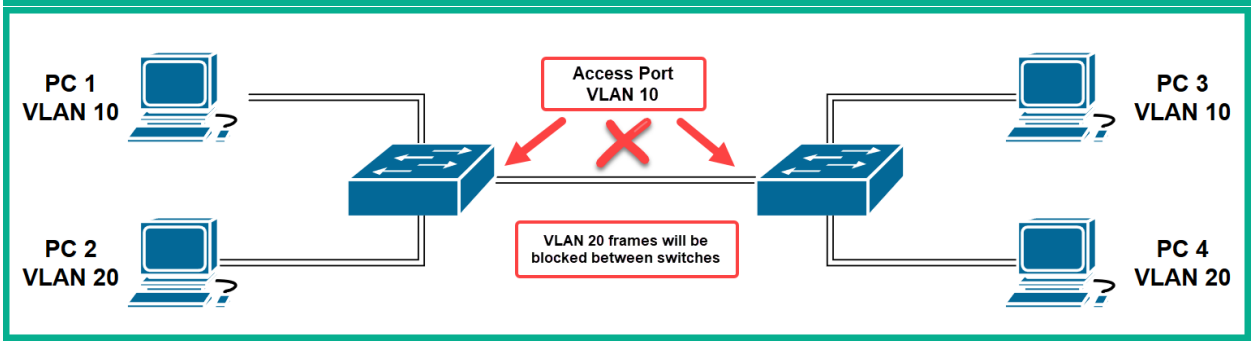

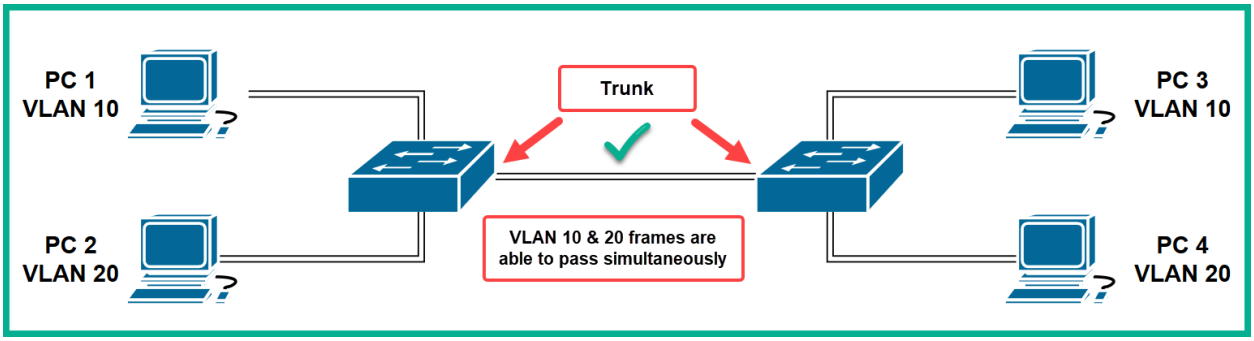

	Dynamic Auto	Dynamic Desirable	Trunk	Access
Dynamic Auto	Access	Trunk	Trunk	Access
Dynamic Desirable	Trunk	Trunk	Trunk	Access
Trunk	Trunk	Trunk	Trunk	Limited Connectivity
Access	Access	Access	Limited Connectivity	Access

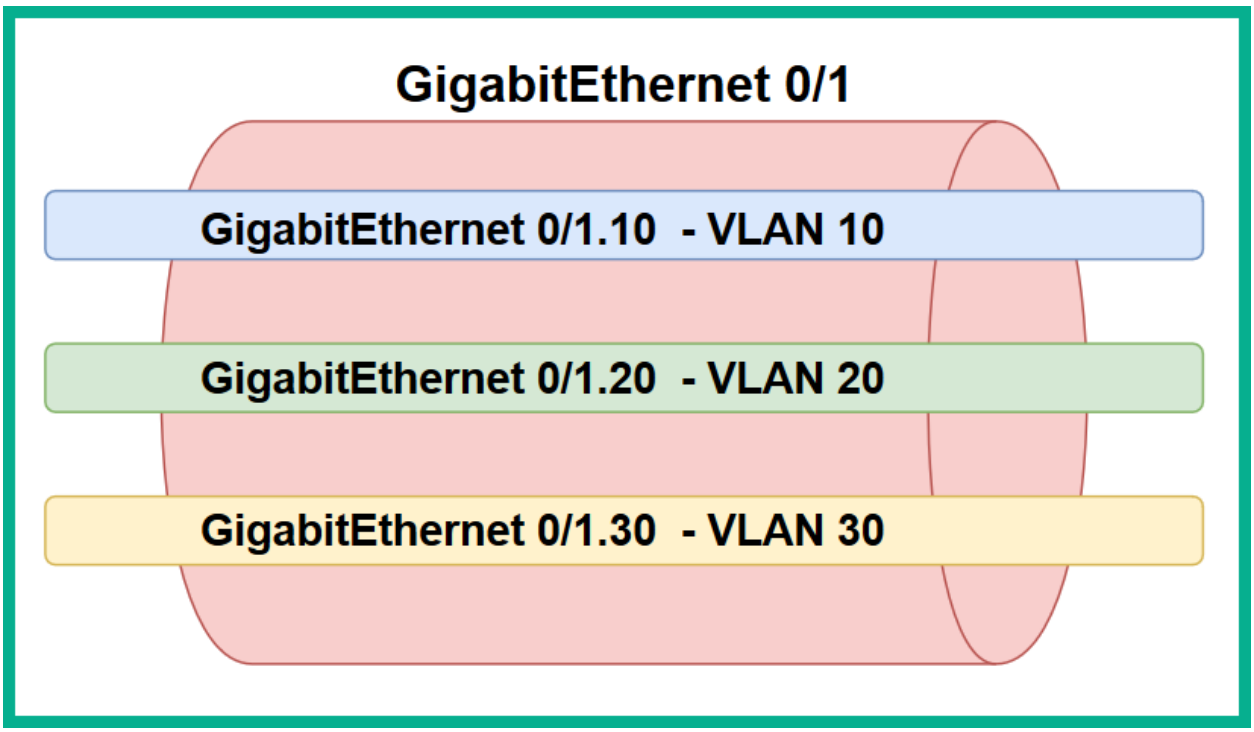
GigabitEthernet 0/1
GigabitEthernet 0/1.10 - VLAN 10
GigabitEthernet 0/1.20 - VLAN 20
GigabitEthernet 0/1.30 - VLAN 30

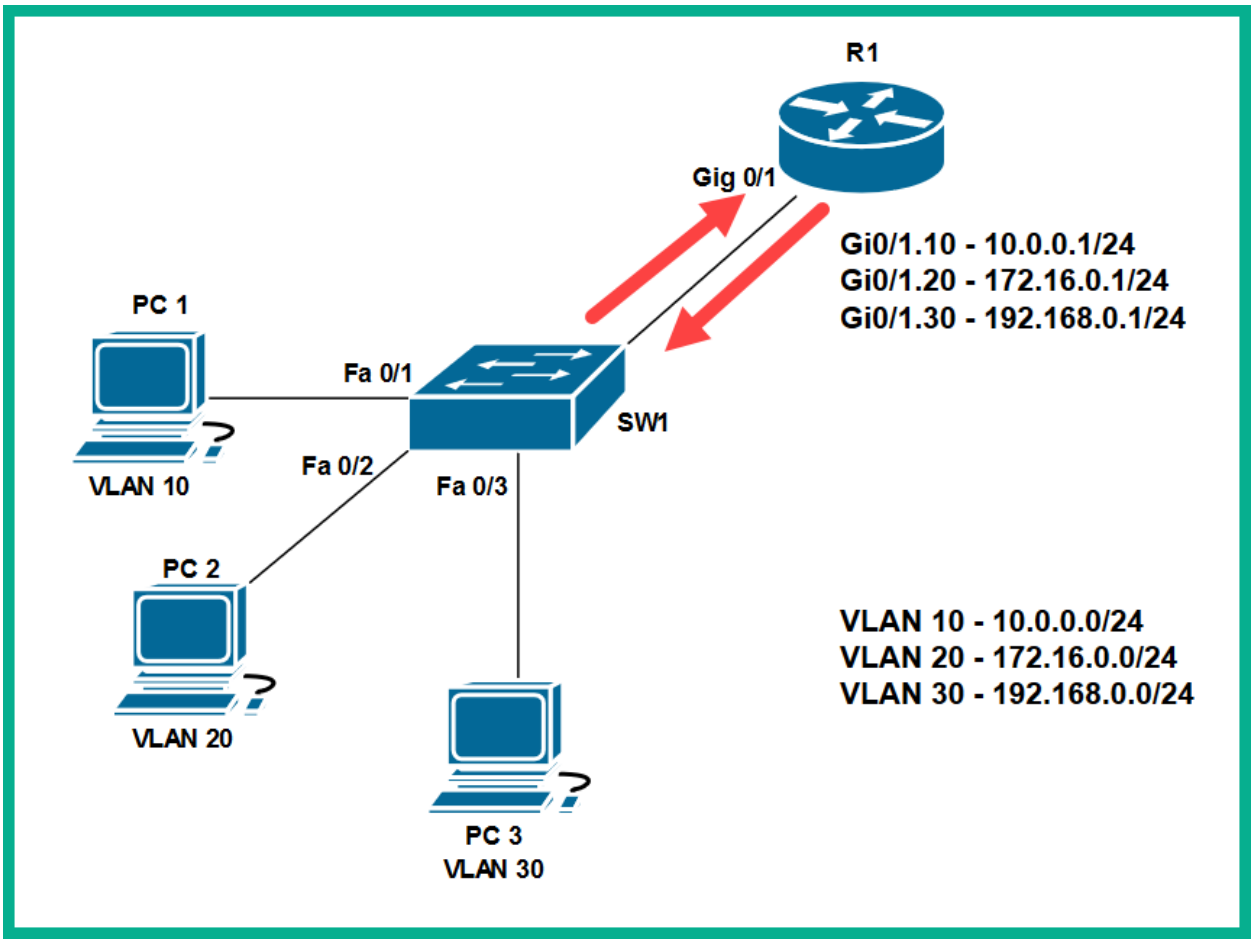
R1
Gig 0/1
Gi0/1.10 - 10.0.0.1/24
Gi0/1.20 - 172.16.0.1/24
Gi0/1.30 - 192.168.0.1/24
PC 1
Fa 0/1
SW1
Fa 0/2
Fa 0/3
VLAN 10
PC 2
VLAN 20
PC 3
VLAN 30
VLAN 10 - 10.0.0.0/24
VLAN 20 - 172.16.0.0/24
VLAN 30 - 192.168.0.0/24

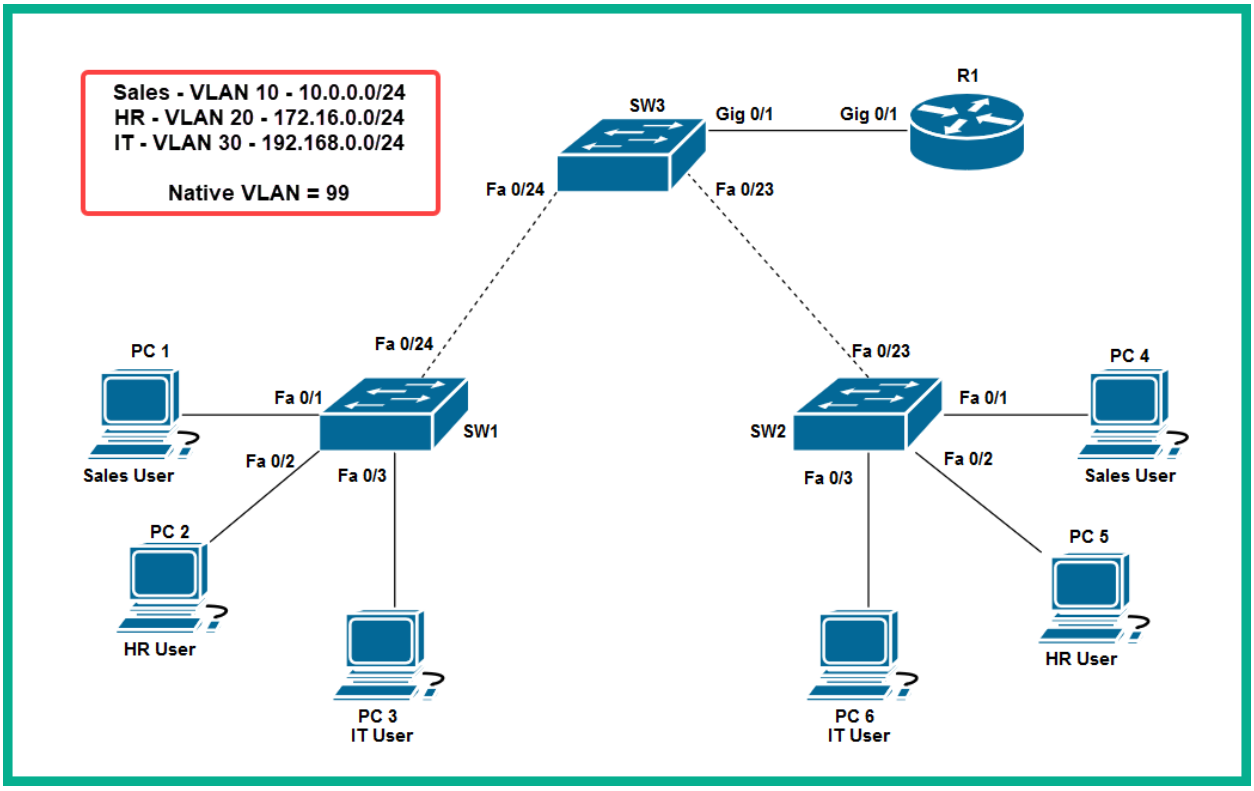


```
SW1#show vlan brief

VLAN Name                             Status    Ports
---- -------------------------------- --------- -------------------------------
1    default                          active    Fa0/1, Fa0/2, Fa0/3, Fa0/4
                                                Fa0/5, Fa0/6, Fa0/7, Fa0/8
                                                Fa0/9, Fa0/10, Fa0/11, Fa0/12
                                                Fa0/13, Fa0/14, Fa0/15, Fa0/16
                                                Fa0/17, Fa0/18, Fa0/19, Fa0/20
                                                Fa0/21, Fa0/22, Fa0/23, Fa0/24
                                                Gig0/1, Gig0/2
10   Sales                            active
20   HR                               active
30   IT                               active
99   Native                           active
1002 fddi-default                     active
1003 token-ring-default               active
1004 fddinet-default                  active
1005 trnet-default                    active
SW1#
```

Our newly created VLANs

```
SW1#show vlan brief

VLAN Name                             Status    Ports
---- -------------------------------- --------- -------------------------------
1    default                          active    Fa0/4, Fa0/5, Fa0/6, Fa0/7
                                                Fa0/8, Fa0/9, Fa0/10, Fa0/11
                                                Fa0/12, Fa0/13, Fa0/14, Fa0/15
                                                Fa0/16, Fa0/17, Fa0/18, Fa0/19
                                                Fa0/20, Fa0/21, Fa0/22, Fa0/23
                                                Fa0/24, Gig0/1, Gig0/2
10   Sales                            active    Fa0/1
20   HR                               active    Fa0/2
30   IT                               active    Fa0/3
99   Native                           active
1002 fddi-default                     active
1003 token-ring-default               active
1004 fddinet-default                  active
1005 trnet-default                    active
SW1#
```

```
SW1#show interfaces FastEthernet 0/1 switchport
Name: Fa0/1
Switchport: Enabled
Administrative Mode: static access
Operational Mode: static access
Administrative Trunking Encapsulation:
Operational Trunking Encapsulation: native
Negotiation of Trunking: Off
Access Mode VLAN: 10 (Sales)
Trunking Native Mode VLAN: 1 (default)
Voice VLAN: none
Administrative private-vlan host-association: none
Administrative private-vlan mapping: none
Administrative private-vlan trunk native VLAN: none
Administrative private-vlan trunk encapsulation: dot1q
Administrative private-vlan trunk normal VLANs: none
Administrative private-vlan trunk private VLANs: none
Operational private-vlan: none
Trunking VLANs Enabled: All
Pruning VLANs Enabled: 2-1001
Capture Mode Disabled
Capture VLANs Allowed: ALL
```

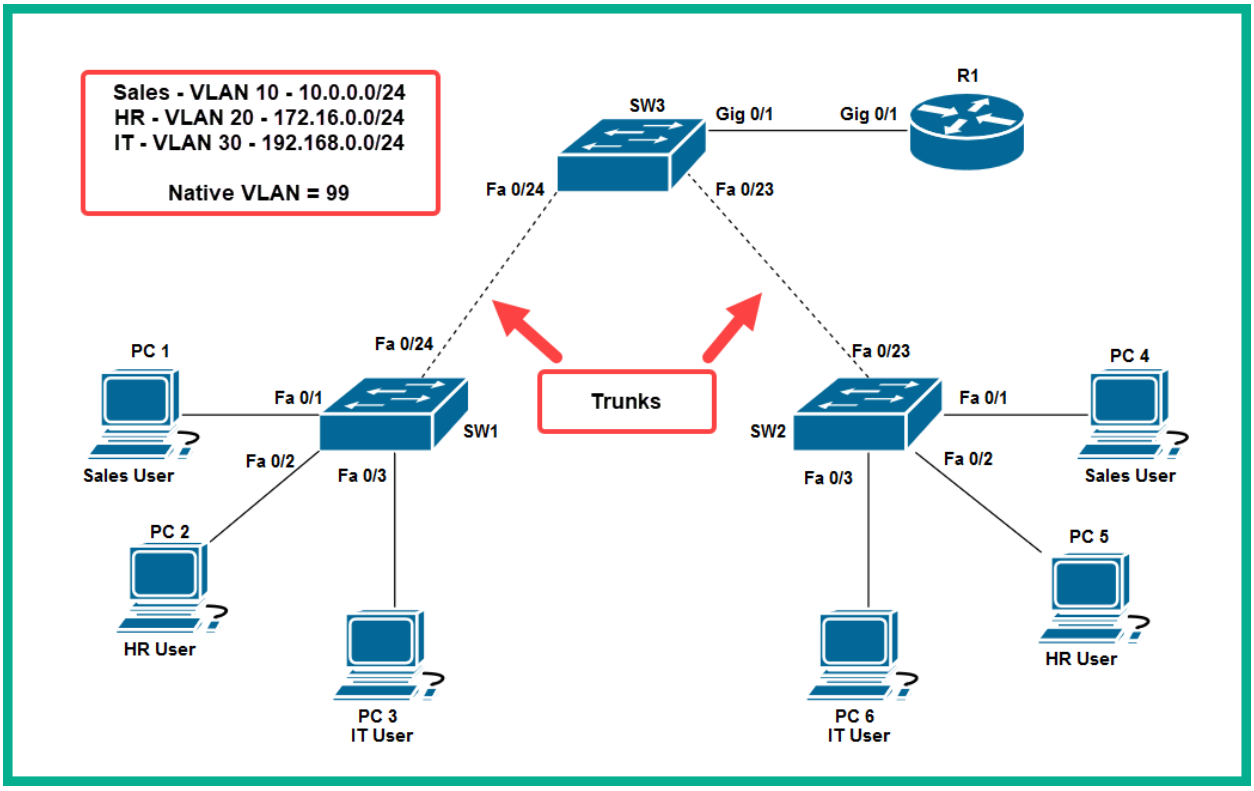


```
SW3#show interfaces trunk
Port        Mode         Encapsulation  Status        Native vlan
Fa0/23      on           802.1q         trunking      99
Fa0/24      on           802.1q         trunking      99

Port        Vlans allowed on trunk
Fa0/23      10,20,30
Fa0/24      10,20,30

Port        Vlans allowed and active in management domain
Fa0/23      10,20,30
Fa0/24      10,20,30

Port        Vlans in spanning tree forwarding state and not pruned
Fa0/23      10,20,30
Fa0/24      10,20,30
```

```
!
interface FastEthernet0/23
 switchport trunk native vlan 99
 switchport trunk allowed vlan 10,20,30
 switchport mode trunk
 switchport nonegotiate
!
interface FastEthernet0/24
 switchport trunk native vlan 99
 switchport trunk allowed vlan 10,20,30
 switchport mode trunk
 switchport nonegotiate
!
```

		IP Address	Subnet Mask	Default Gateway
VLAN 10 - Sales	**PC 1**	10.0.0.10	255.255.255.0	10.0.0.1
VLAN 20 - HR	**PC 2**	172.16.0.10	255.255.255.0	172.16.0.1
VLAN 30 - IT	**PC 3**	192.168.0.10	255.255.255.0	192.168.0.1
VLAN 10 - Sales	**PC 4**	10.0.0.11	255.255.255.0	10.0.0.1
VLAN 20 - HR	**PC 5**	172.16.0.11	255.255.255.0	172.16.0.1
VLAN 30 - IT	**PC 6**	192.168.0.11	255.255.255.0	192.168.0.1

```
C:\>ping 10.0.0.11

Pinging 10.0.0.11 with 32 bytes of data:

Reply from 10.0.0.11: bytes=32 time<1ms TTL=128
Reply from 10.0.0.11: bytes=32 time<1ms TTL=128
Reply from 10.0.0.11: bytes=32 time<1ms TTL=128
Reply from 10.0.0.11: bytes=32 time=1ms TTL=128

Ping statistics for 10.0.0.11:
    Packets: Sent = 4, Received = 4, Lost = 0 (0% loss),
Approximate round trip times in milli-seconds:
    Minimum = 0ms, Maximum = 1ms, Average = 0ms
```

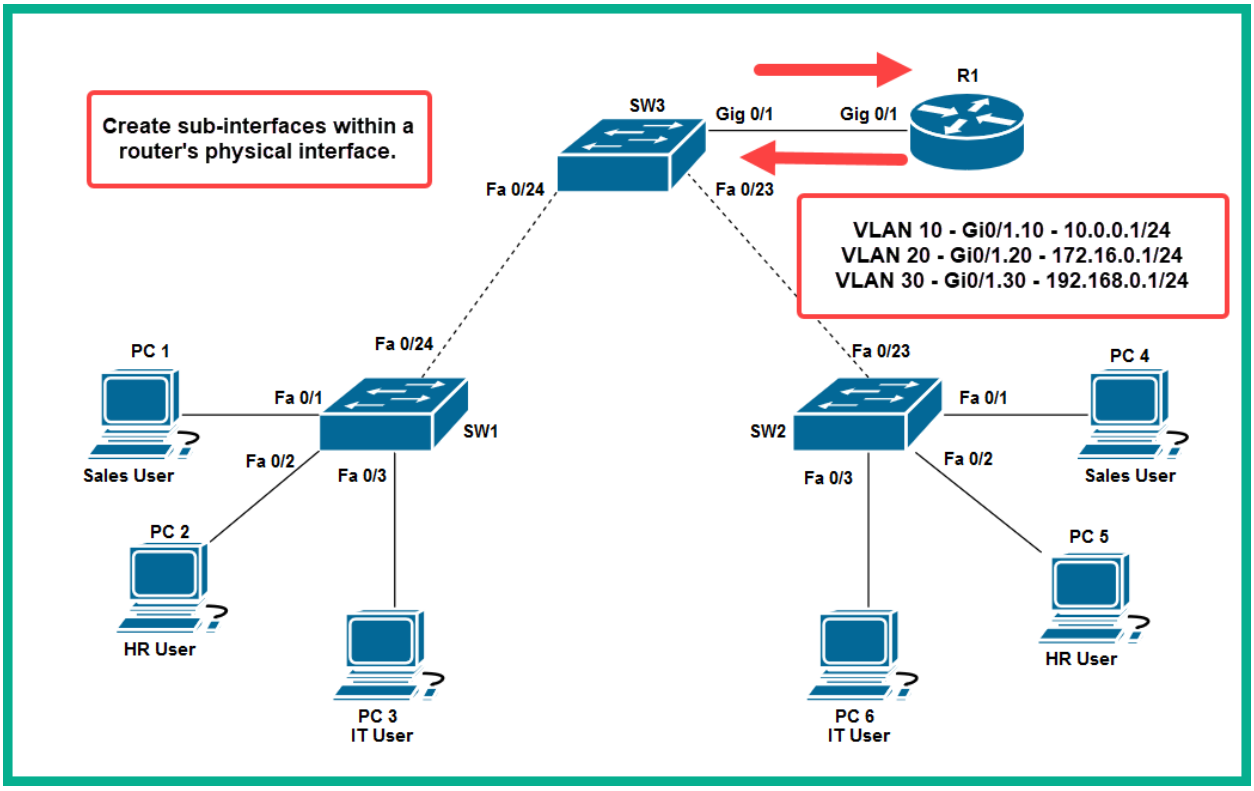


```
C:\>ping 172.16.0.10

Pinging 172.16.0.10 with 32 bytes of data:

Reply from 172.16.0.10: bytes=32 time<1ms TTL=127
Reply from 172.16.0.10: bytes=32 time=13ms TTL=127
Reply from 172.16.0.10: bytes=32 time<1ms TTL=127
Reply from 172.16.0.10: bytes=32 time=3ms TTL=127

Ping statistics for 172.16.0.10:
    Packets: Sent = 4, Received = 4, Lost = 0 (0% loss),
Approximate round trip times in milli-seconds:
    Minimum = 0ms, Maximum = 13ms, Average = 4ms
```

```
C:\>tracert 172.16.0.10

Tracing route to 172.16.0.10 over a maximum of 30 hops:

  1    0 ms      3 ms      1 ms      10.0.0.1
  2    0 ms      12 ms     11 ms     172.16.0.10

Trace complete.
```

```
SW3#show cdp neighbors
Capability Codes: R - Router, T - Trans Bridge, B - Source Route Bridge
                  S - Switch, H - Host, I - IGMP, r - Repeater, P - Phone
Device ID     Local Intrfce   Holdtme    Capability   Platform    Port ID
R1            Gig 0/1          157            R       C2900       Gig 0/1
SW1           Fas 0/24         157            S       2960        Fas 0/24
SW2           Fas 0/23         157            S       2960        Fas 0/23
R1            Gig 0/1          157            R       C2900       Gig 0/1.10
R1            Gig 0/1          157            R       C2900       Gig 0/1.20
R1            Gig 0/1          157            R       C2900       Gig 0/1.30
SW3#
```

```
Device ID: R1
Entry address(es):
  IP address : 10.0.0.1
Platform: cisco C2900, Capabilities: Router
Interface: GigabitEthernet0/1, Port ID (outgoing port): GigabitEthernet0/1.10
Holdtime: 167

Version :
Cisco IOS Software, C2900 Software (C2900-UNIVERSALK9-M), Version 15.1(4)M4, RELEASE
(fc2)
Technical Support: http://www.cisco.com/techsupport
Copyright (c) 1986-2012 by Cisco Systems, Inc.
Compiled Thurs 5-Jan-12 15:41 by pt_team

advertisement version: 2
Duplex: full
```

```
SW3#show lldp

Global LLDP Information:
    Status: ACTIVE
    LLDP advertisements are sent every 30 seconds
    LLDP hold time advertised is 120 seconds
    LLDP interface reinitialisation delay is 2 seconds
SW3#
```

```
SW3#show lldp neighbors
Capability codes:
    (R) Router, (B) Bridge, (T) Telephone, (C) DOCSIS Cable Device
    (W) WLAN Access Point, (P) Repeater, (S) Station, (O) Other
Device ID           Local Intf     Hold-time  Capability      Port ID
SW1                 Fa0/24         120        B               Fa0/24
R1                  Gig0/1         120        R               Gig

Total entries displayed: 2
```

```
SW3#show lldp neighbors detail
------------------------------------------------
Chassis id: 0003.E411.4818
Port id: Fa0/24
Port Description: FastEthernet0/24
System Name: SW1
System Description:
Cisco IOS Software, C2960 Software (C2960-LANBASE-M),
SOFTWARE (fc1)
Copyright (c) 1986-2005 by Cisco Systems, Inc.
Compiled Wed 12-Oct-05 22:05 by pt_team
Time remaining: 90 seconds
System Capabilities: B
Enabled Capabilities: B
Management Addresses - not advertised
Auto Negotiation - supported, enabled
Physical media capabilities:
    100baseT(FD)
    100baseT(HD)
    1000baseT(HD)
Media Attachment Unit type: 10
Vlan ID: 1
```

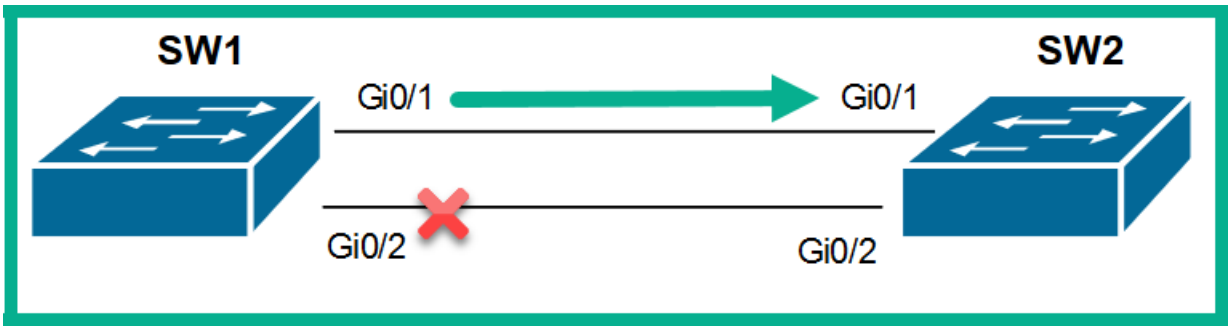

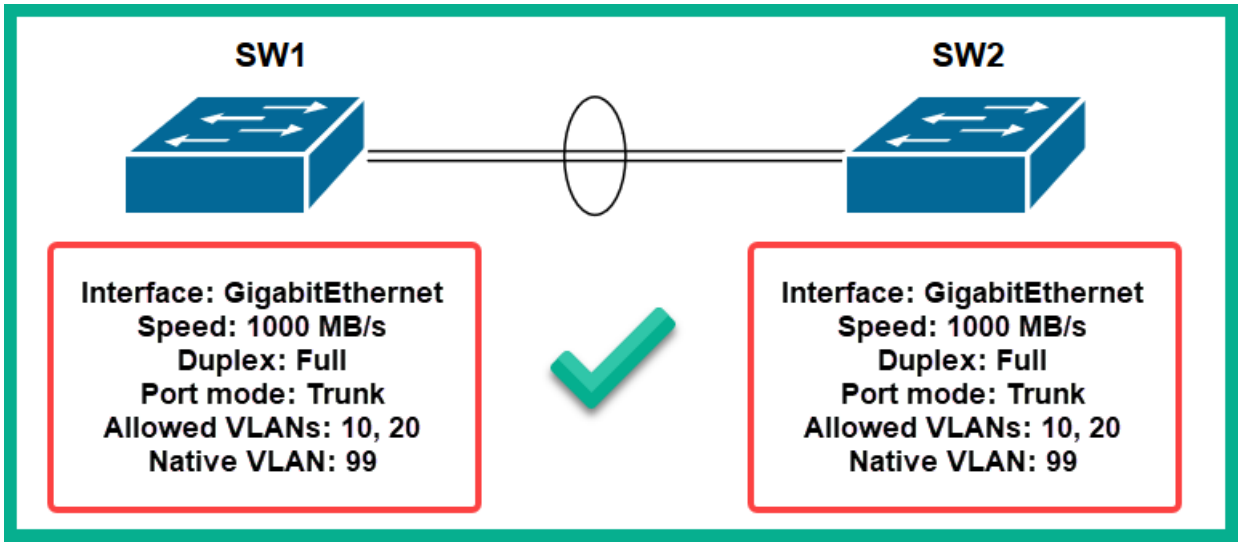

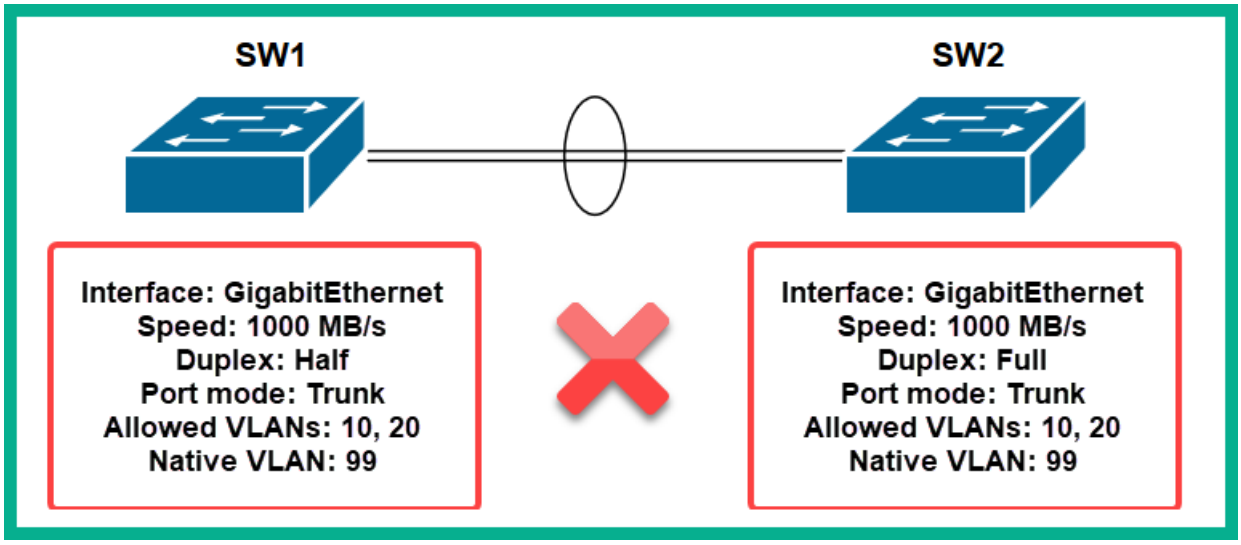

SW1	SW2	Status
On	On	Yes
Auto/Desirable	Desirable	Yes
On/Auto/Desirable	No Configuration	No
On	Desirable	No
On/Auto	Auto	No

SW1	SW2	Status
On	On	Yes
Active/Passive	Active	Yes
On/Active/Passive	No Configuration	No
On	Active	No
On/Passive	Passive	No

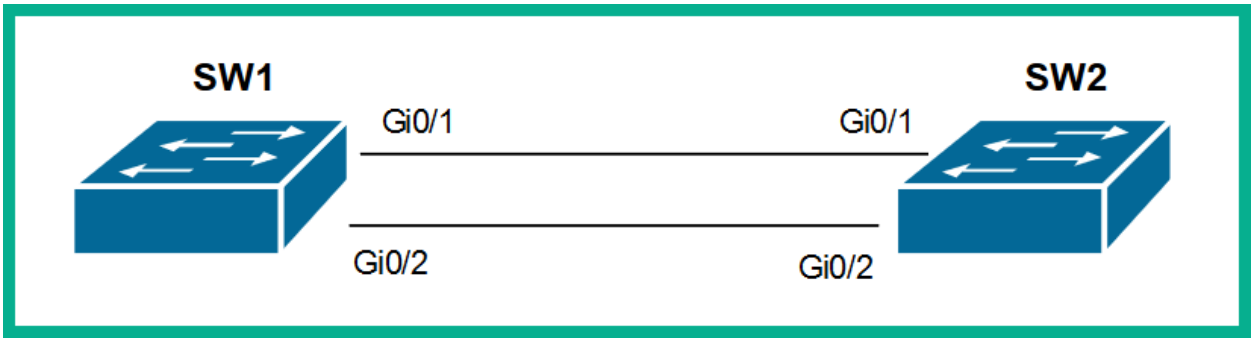


```
SW1#show etherchannel summary
Flags:  D - down        P - in port-channel
        I - stand-alone s - suspended
        H - Hot-standby (LACP only)
        R - Layer3      S - Layer2
        U - in use      f - failed to allocate aggregator
        u - unsuitable for bundling
        w - waiting to be aggregated
        d - default port


Number of channel-groups in use: 1
Number of aggregators:           1

Group  Port-channel  Protocol    Ports
------+-------------+-----------
+-----------------------------------------

1      Po1(SU)           LACP   Gig0/1(P) Gig0/2(P)
SW1#
```

```
SW1#show etherchannel port-channel
                Channel-group listing:
                ----------------------

Group: 1
----------
                Port-channels in the group:
                ---------------------------

Port-channel: Po1    (Primary Aggregator)
------------

Age of the Port-channel   = 00d:00h:04m:39s
Logical slot/port   = 2/1       Number of ports = 2
GC                  = 0x00000000      HotStandBy port = null
Port state          = Port-channel
Protocol            =   LACP
Port Security       = Disabled

Ports in the Port-channel:

Index   Load   Port     EC state        No of bits
------+------+------+------------------+-----------
  0     00     Gig0/1   Active             0
  0     00     Gig0/2   Active             0
Time since last port bundled:    00d:00h:03m:09s    Gig0/2
```

Chapter 6: Understanding and Configuring Spanning-Tree

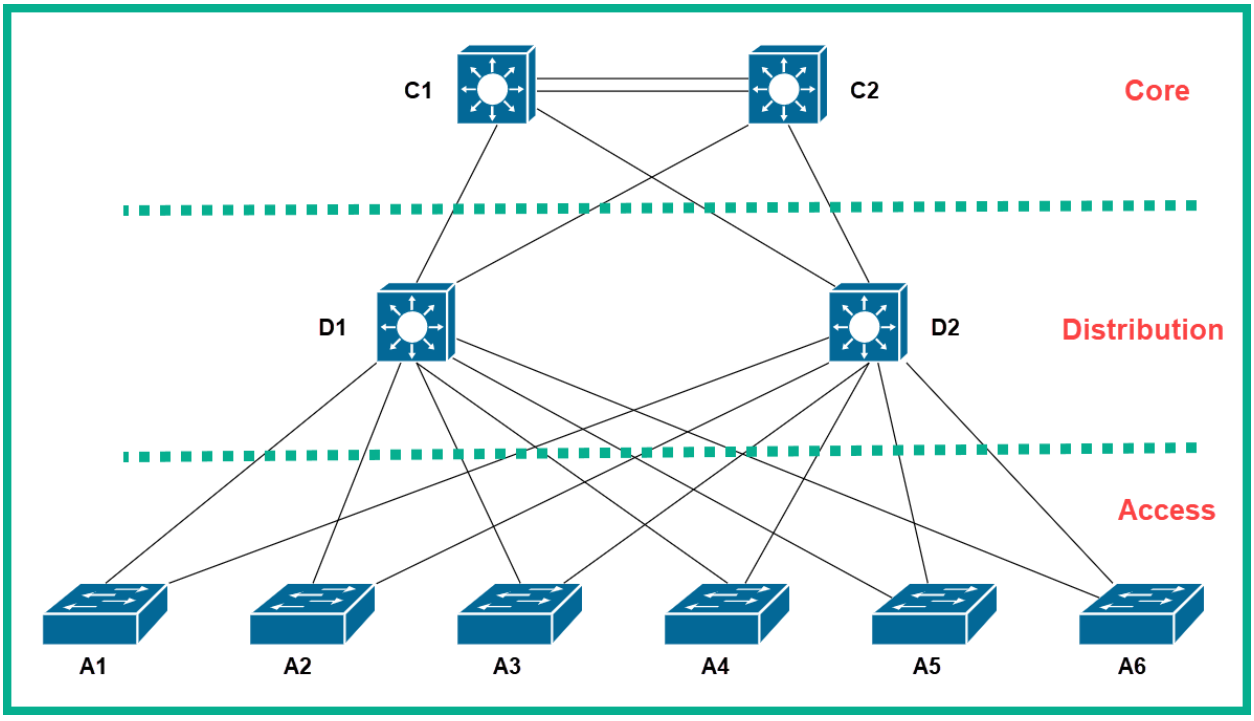

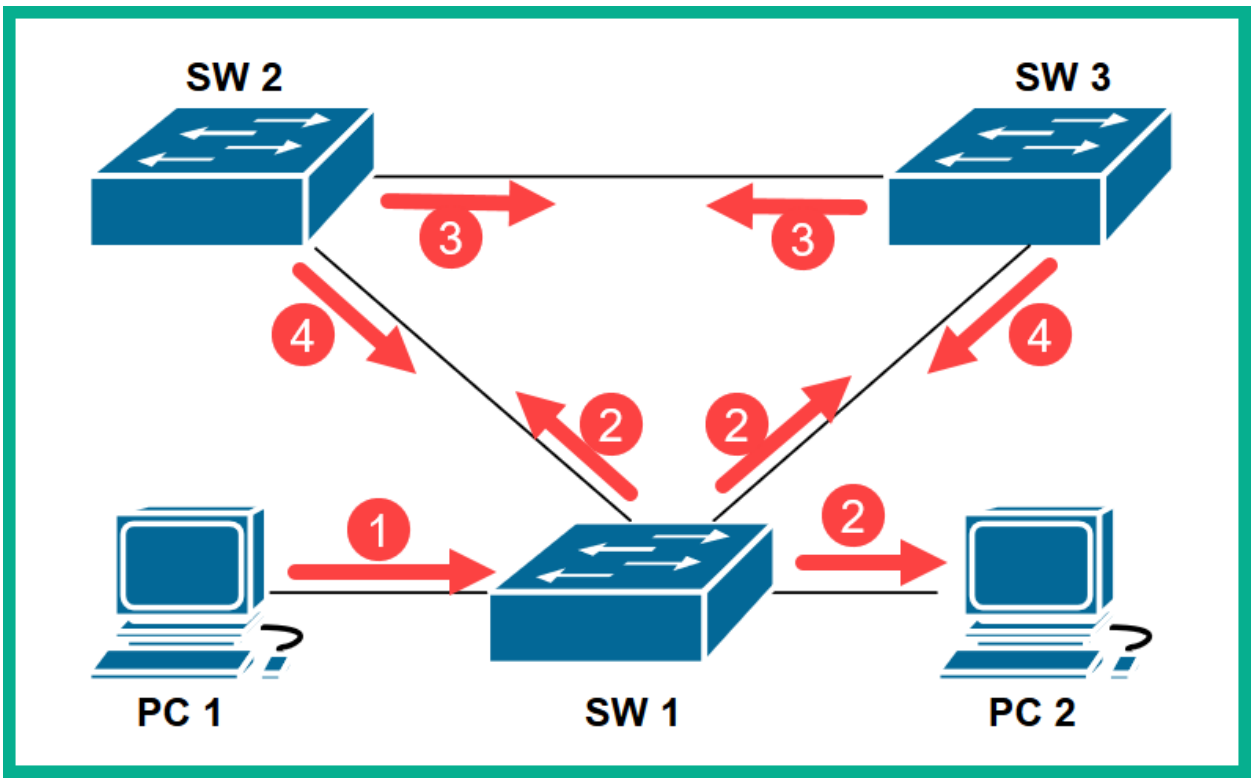

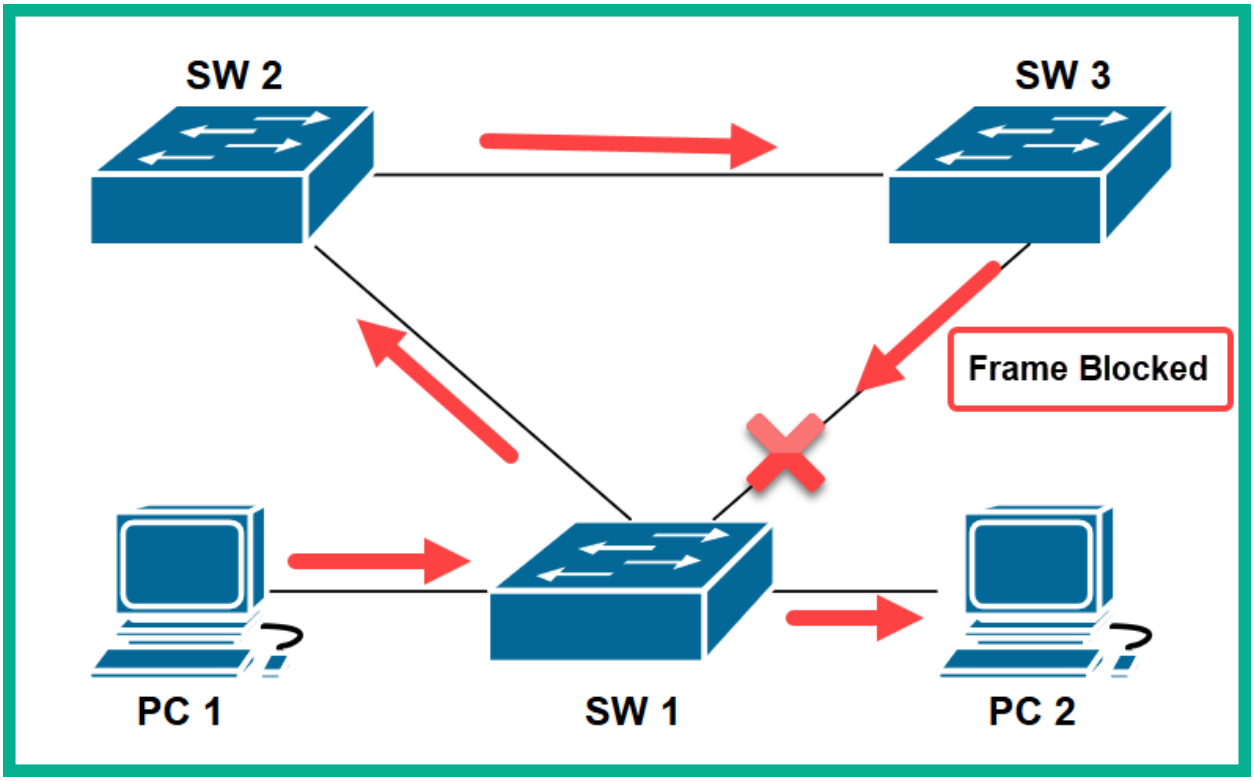

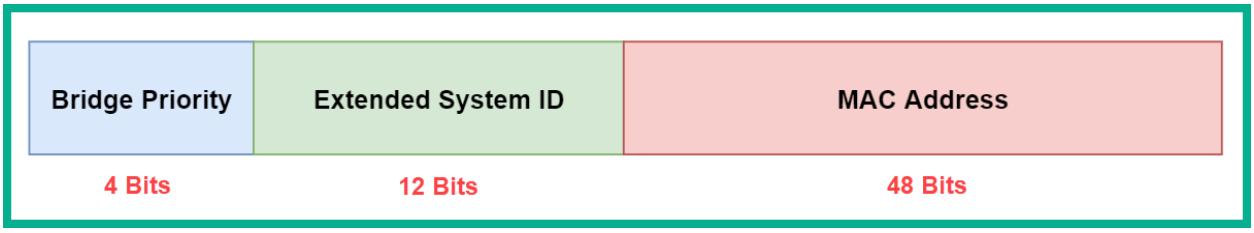


```
63488K bytes of flash-simulated non-volatile configuration memory.
Base ethernet MAC Address       : 000A.4123.B2A7
Motherboard assembly number     : 73-9832-06
Power supply part number        : 341-0097-02
Motherboard serial number       : FOC103248MJ
Power supply serial number      : DCA102133JA
Model revision number           : B0
Motherboard revision number     : C0
Model number                    : WS-C2960-24TT
System serial number            : FOC1033Z1EY
Top Assembly Part Number        : 800-26671-02
Top Assembly Revision Number    : B0
Version ID                      : V02
CLEI Code Number                : COM3K00BRA
Hardware Board Revision Number  : 0x01
```

Device's MAC Address

```
D2#show spanning-tree
VLAN0001
  Spanning tree enabled protocol ieee
  Root ID     Priority    4097
              Address     00D0.FFA3.AC10
              Cost        19
              Port        7(FastEthernet0/7)
              Hello Time  2 sec  Max Age 20 sec  Forward Delay 15 sec

  Bridge ID   Priority    32769  (priority 32768 sys-id-ext 1)
              Address     0001.9671.BEDE
              Hello Time  2 sec  Max Age 20 sec  Forward Delay 15 sec
              Aging Time  20

Interface        Role Sts Cost      Prio.Nbr Type
---------------- ---- --- --------- -------- --------------------------
Fa0/2            Desg FWD 19        128.2    P2p
Fa0/5            Desg FWD 19        128.5    P2p
Fa0/7            Root FWD 19        128.7    P2p
Fa0/6            Desg FWD 19        128.6    P2p
```

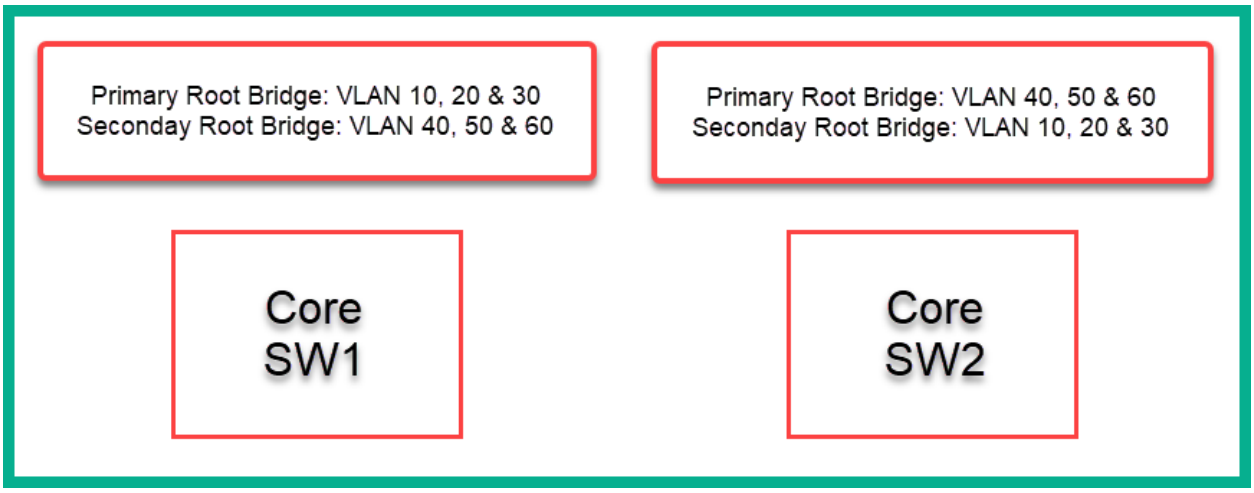

Interface	Role	Sts	Cost	Prio.Nbr	Type
Fa0/1	Desg	LRN	19	128.1	P2p
Fa0/2	Desg	FWD	19	128.2	P2p
Fa0/3	Root	FWD	19	128.3	P2p
Fa0/4	Desg	FWD	19	128.4	P2p
Fa0/5	Desg	FWD	19	128.5	P2p
Fa0/6	Desg	LRN	19	128.6	P2p
Fa0/7	Desg	FWD	19	128.7	P2p
Fa0/8	Desg	FWD	19	128.8	P2p

Bridge ID:
Priority 32769
MAC address: 000A.0011.1111

Bridge ID:
Priority 24577
MAC address: 000A.0033.3333

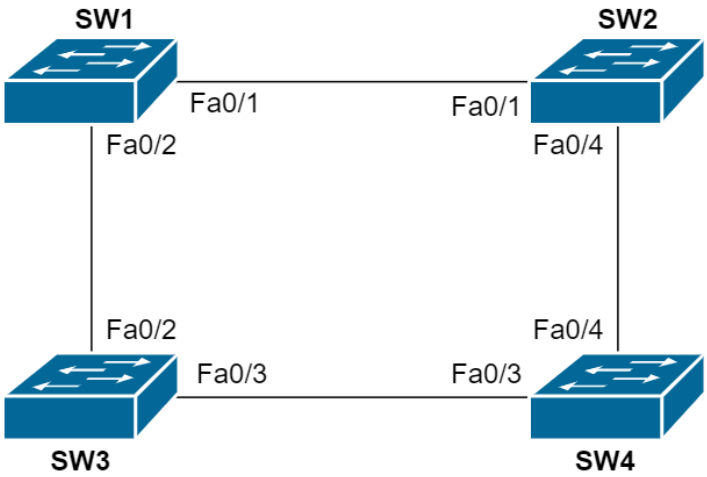

Bridge ID:
Priority 32769
MAC address: 000A.0022.2222

Bridge ID:
Priority 32769
MAC address: 000A.0044.4444

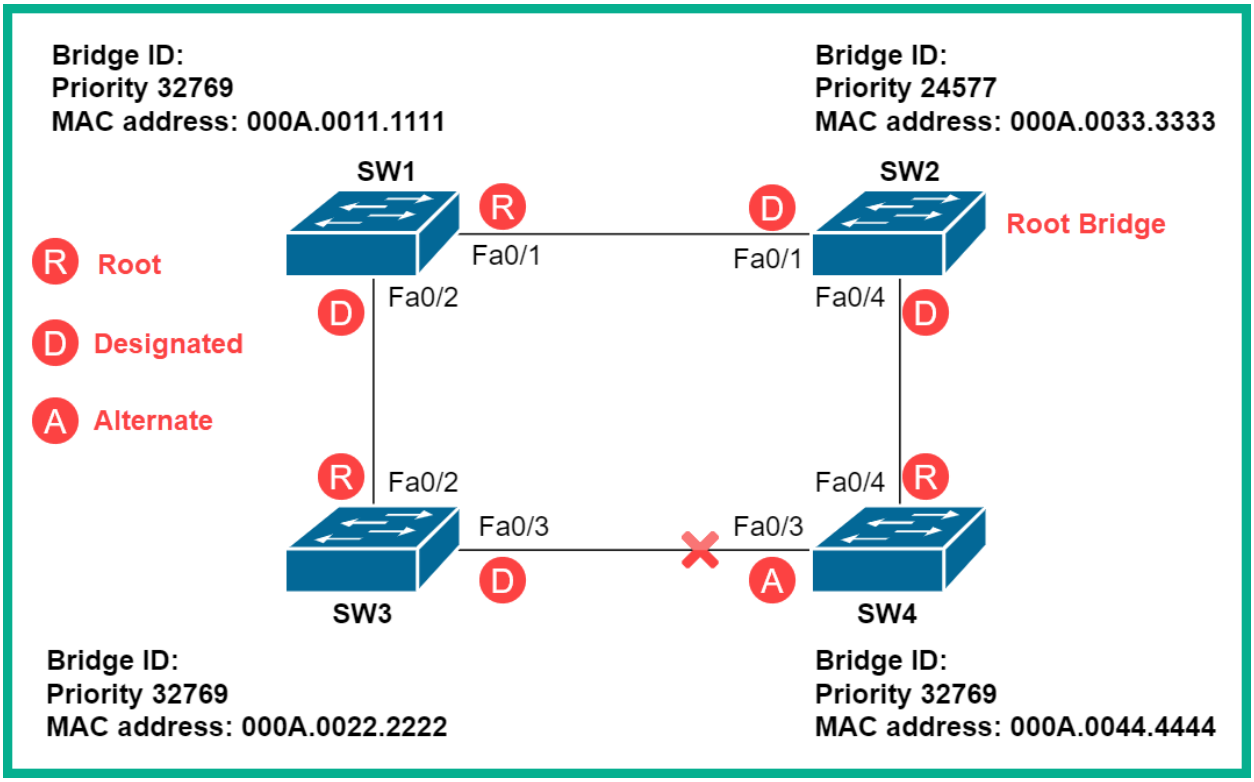
Bridge ID:
Priority 32769
MAC address: 000A.0011.1111
Bridge ID:
Priority 24577
MAC address: 000A.0033.3333
SW1
SW2
Root Bridge
R Root
D Designated
A Alternate
R
D
Fa0/1
Fa0/1
Fa0/2
Fa0/4
D
R
Fa0/2
Fa0/4
R
Fa0/3
Fa0/3
D
A
SW3
SW4
Bridge ID:
Priority 32769
MAC address: 000A.0022.2222
Bridge ID:
Priority 32769
MAC address: 000A.0044.4444

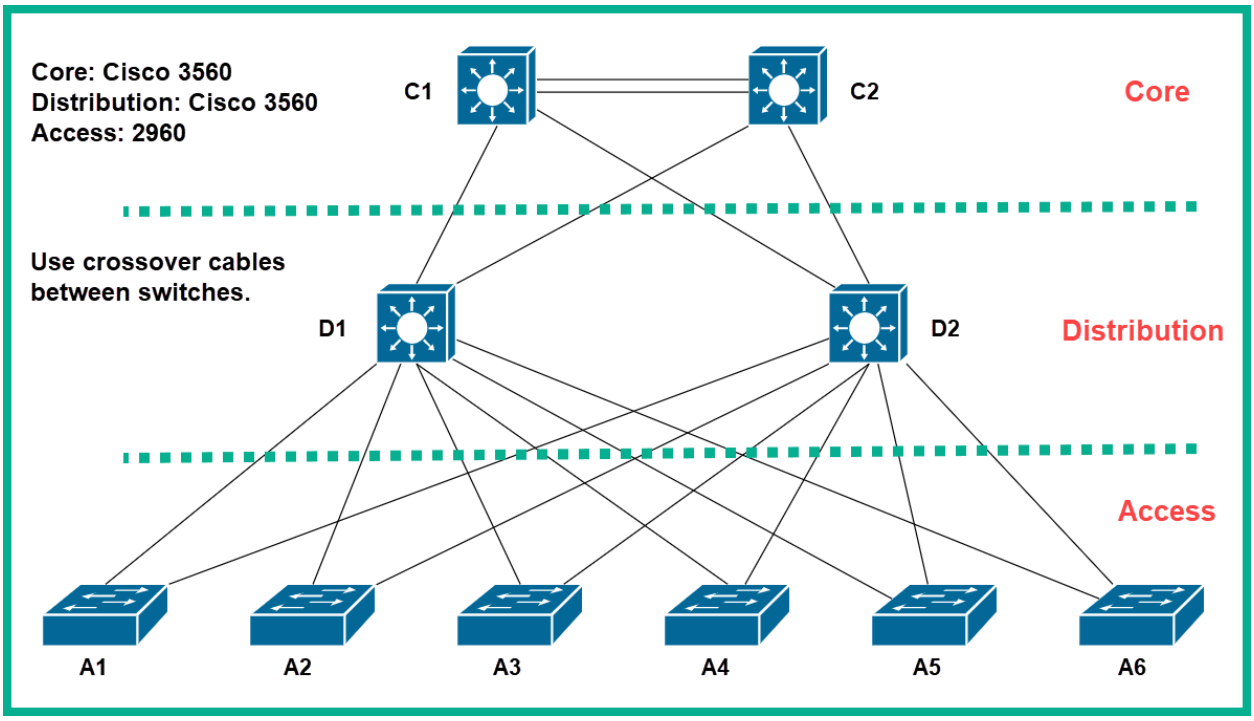
Core: Cisco 3560
Distribution: Cisco 3560
Access: 2960
C1
C2
Core
Use crossover cables
between switches.
D1
D2
Distribution
Access
A1
A2
A3
A4
A5
A6

```
C1#show spanning-tree
VLAN0001
  Spanning tree enabled protocol ieee
  Root ID     Priority    32769
              Address     0001.4293.B109
              Cost        38
              Port        2(FastEthernet0/2)
              Hello Time  2 sec  Max Age 20 sec  Forward Delay 15 sec

  Bridge ID   Priority    32769  (priority 32768 sys-id-ext 1)
              Address     00D0.FFA3.AC10
              Hello Time  2 sec  Max Age 20 sec  Forward Delay 15 sec
              Aging Time  20

Interface        Role Sts Cost      Prio.Nbr Type
---------------- ---- --- --------- -------- --------------------------------
Fa0/1            Altn BLK 19        128.1    P2p
Fa0/2            Root FWD 19        128.2    P2p
Fa0/3            Altn BLK 19        128.3    P2p
Fa0/4            Altn BLK 19        128.4    P2p
```

Switch is running PVST+

```
C1#show cdp neighbors
Capability Codes: R - Router, T - Trans Bridge, B - Source Route Bridge
                  S - Switch, H - Host, I - IGMP, r - Repeater, P - Phone
Device ID    Local Intrfce   Holdtme    Capability   Platform    Port ID
C2           Fas 0/3          179                     3560        Fas 0/3
C2           Fas 0/4          179                     3560        Fas 0/4
D1           Fas 0/1          131                     3560        Fas 0/7
D2           Fas 0/2          145                     3560        Fas 0/7
C1#
```

```
D2#show spanning-tree
VLAN0001
  Spanning tree enabled protocol ieee
  Root ID     Priority    32769
              Address     0001.4293.B109
              Cost        19
              Port        3(FastEthernet0/3)
              Hello Time  2 sec  Max Age 20 sec  Forward Delay 15 sec

  Bridge ID   Priority    32769  (priority 32768 sys-id-ext 1)
              Address     0001.9671.BEDE
              Hello Time  2 sec  Max Age 20 sec  Forward Delay 15 sec
              Aging Time  20

Interface        Role Sts Cost      Prio.Nbr Type
---------------- ---- --- --------- -------- --------------------------------
Fa0/7            Desg FWD 19        128.7    P2p
Fa0/1            Desg FWD 19        128.1    P2p
Fa0/2            Desg FWD 19        128.2    P2p
Fa0/3            Root FWD 19        128.3    P2p
Fa0/4            Desg FWD 19        128.4    P2p
```

```
D2#show cdp neighbors
Capability Codes: R - Router, T - Trans Bridge, B - Source Route Bridge
                  S - Switch, H - Host, I - IGMP, r - Repeater, P - Phone
Device ID        Local Intrfce     Holdtme     Capability   Platform     Port ID
A2               Fas 0/2           146              S       2960         Fas 0/2
C2               Fas 0/8           146                      3560         Fas 0/2
A1               Fas 0/1           146              S       2960         Fas 0/2
A3               Fas 0/3           146              S       2960         Fas 0/2
A4               Fas 0/4           146              S       2960         Fas 0/2
```

```
A3#show spanning-tree
VLAN0001
  Spanning tree enabled protocol ieee
  Root ID     Priority    32769
              Address     0001.4293.B109
              This bridge is the root
              Hello Time  2 sec  Max Age 20 sec  Forward Delay 15 sec

  Bridge ID   Priority    32769  (priority 32768 sys-id-ext 1)
              Address     0001.4293.B109
              Hello Time  2 sec  Max Age 20 sec  Forward Delay 15 sec
              Aging Time  20

Interface        Role Sts Cost      Prio.Nbr Type
---------------- ---- --- --------- -------- --------------------------
Fa0/1            Desg FWD 19        128.1    P2p
Fa0/2            Desg FWD 19        128.2    P2p
```

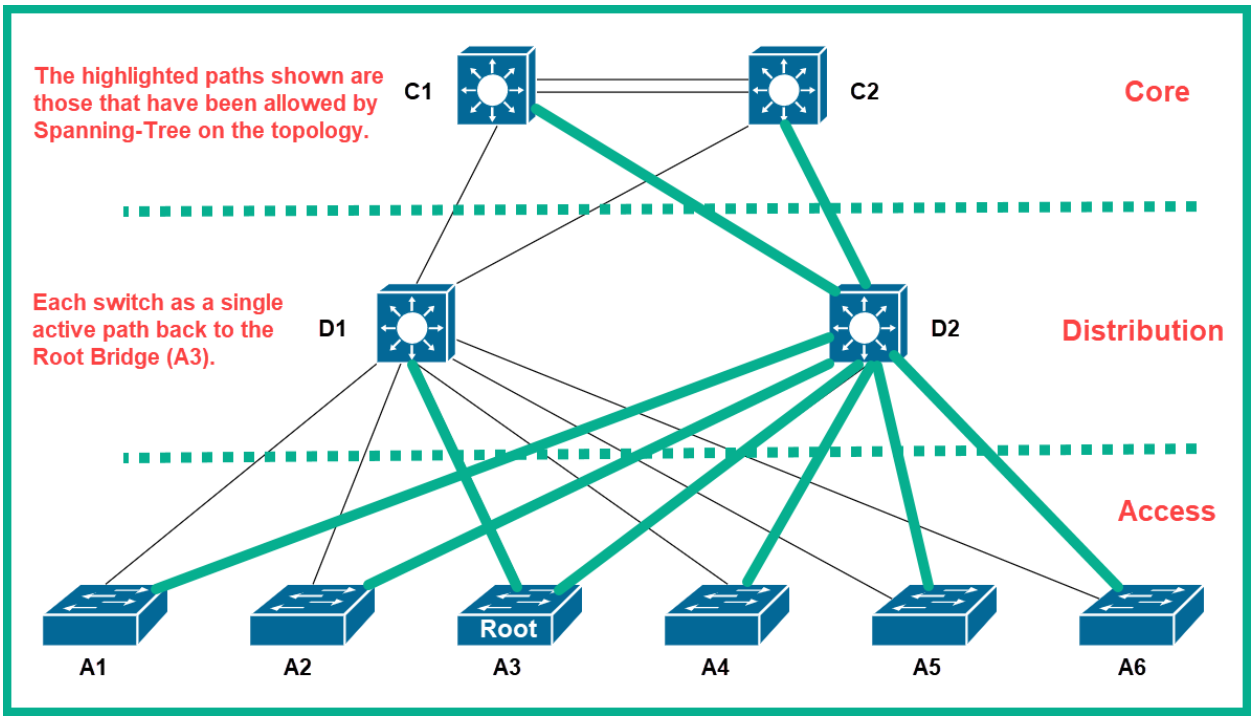

```
C1#show spanning-tree
VLAN0001
  Spanning tree enabled protocol rstp
  Root ID     Priority    32769
              Address     0001.4293.B109
              Cost        38
              Port        2(FastEthernet0/2)
              Hello Time  2 sec  Max Age 20 sec  Forward Delay 15 sec

  Bridge ID   Priority    32769  (priority 32768 sys-id-ext 1)
              Address     00D0.FFA3.AC10
              Hello Time  2 sec  Max Age 20 sec  Forward Delay 15 sec
              Aging Time  20
```

Rapid-PVST+ is enabled

```
C1#show spanning-tree
VLAN0001
  Spanning tree enabled protocol rstp
  Root ID     Priority    4097
              Address     00D0.FFA3.AC10
              This bridge is the root
              Hello Time  2 sec  Max Age 20 sec  Forward Delay 15 sec

  Bridge ID   Priority    4097  (priority 4096 sys-id-ext 1)
              Address     00D0.FFA3.AC10
              Hello Time  2 sec  Max Age 20 sec  Forward Delay 15 sec
              Aging Time  20

Interface        Role Sts Cost      Prio.Nbr Type
---------------- ---- --- --------- -------- --------------------------------
Fa0/3            Desg FWD 19        128.3    P2p
Fa0/1            Desg FWD 19        128.1    P2p
Fa0/2            Desg FWD 19        128.2    P2p
Fa0/4            Desg FWD 19        128.4    P2p
```

```
A3#show spanning-tree
VLAN0001
  Spanning tree enabled protocol rstp
  Root ID     Priority    4097
              Address     00D0.FFA3.AC10
              Cost        38
              Port        1(FastEthernet0/1)
              Hello Time  2 sec  Max Age 20 sec  Forward Delay 15 sec

  Bridge ID   Priority    32769  (priority 32768 sys-id-ext 1)
              Address     0001.4293.B109
              Hello Time  2 sec  Max Age 20 sec  Forward Delay 15 sec
              Aging Time  20

Interface        Role Sts Cost      Prio.Nbr Type
---------------- ---- --- --------- -------- --------------------------------
Fa0/1            Root FWD 19        128.1    P2p
Fa0/2            Desg FWD 19        128.2    P2p
```

C1 Details

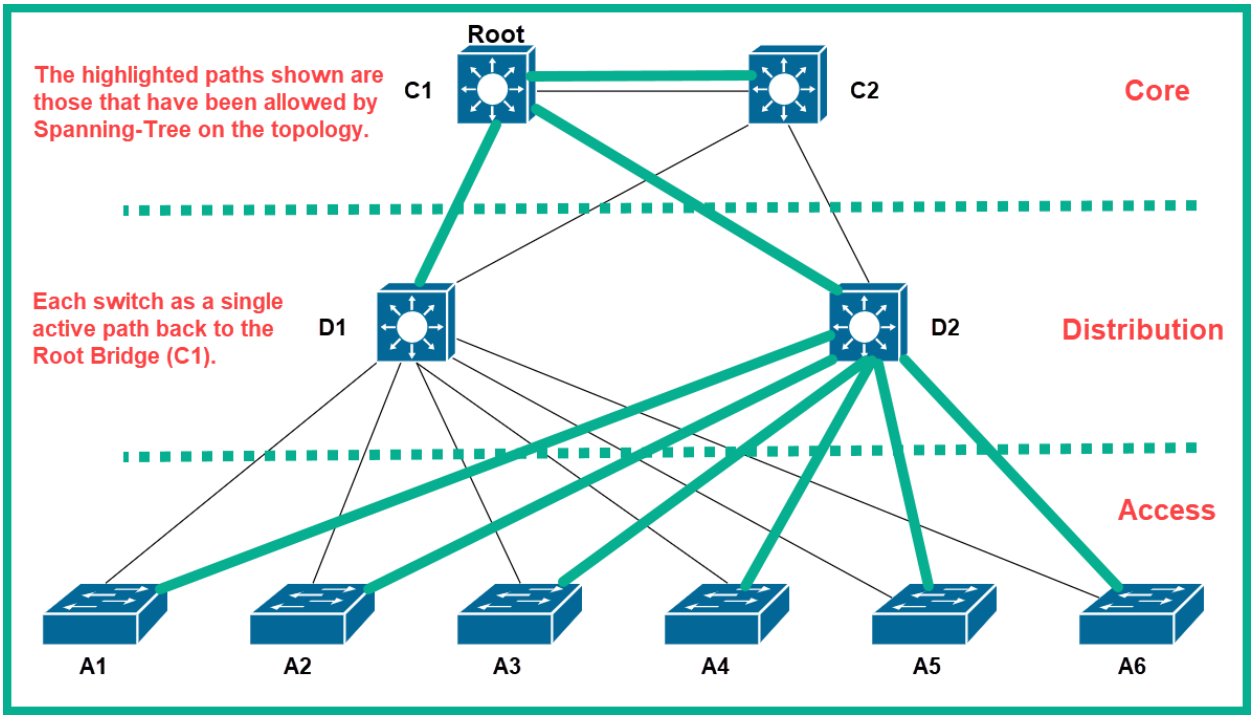

```
A1(config)#interface FastEthernet 0/3
A1(config-if)#switchport mode access
A1(config-if)#switchport nonegotiate
A1(config-if)#spanning-tree portfast
%Warning: portfast should only be enabled on ports connected to a single
host. Connecting hubs, concentrators, switches, bridges, etc... to this
interface  when portfast is enabled, can cause temporary bridging loops.
Use with CAUTION

%Portfast has been configured on FastEthernet0/3 but will only
have effect when the interface is in a non-trunking mode.
A1(config-if)#spanning-tree bpduguard enable
A1(config-if)#exit
```

1

2

3

```
A1#show running-config
Building configuration...

Current configuration : 1186 bytes
!
version 12.2
no service timestamps log datetime msec
no service timestamps debug datetime msec
no service password-encryption
!
hostname A1
!
spanning-tree mode rapid-pvst
spanning-tree extend system-id
!
interface FastEthernet0/3
 switchport mode access
 switchport nonegotiate
 spanning-tree portfast
 spanning-tree bpduguard enable
!
```

Chapter 7: Interpreting Routing Components

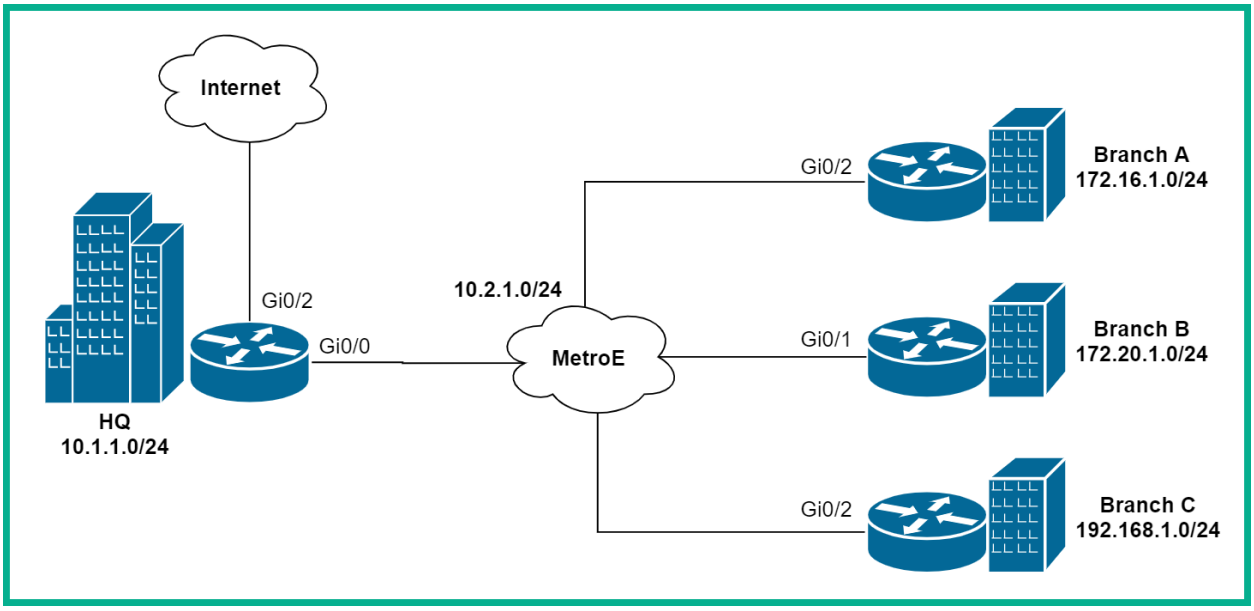

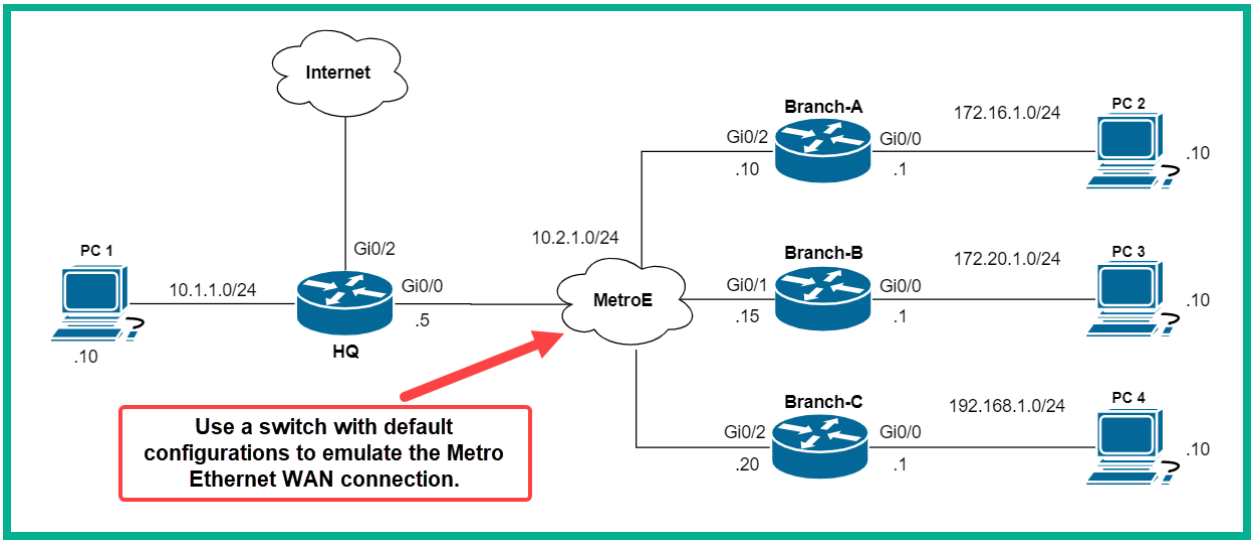


```
C:\>ipconfig

FastEthernet0 Connection:(default port)

   Link-local IPv6 Address.....: FE80::202:4AFF:FE61:7DD5
   IP Address.....................: 172.16.1.10
   Subnet Mask....................: 255.255.255.0
   Default Gateway................: 172.16.1.1
```

```
C:\>ping 172.16.1.1

Pinging 172.16.1.1 with 32 bytes of data:

Reply from 172.16.1.1: bytes=32 time=1ms TTL=255
Reply from 172.16.1.1: bytes=32 time<1ms TTL=255
Reply from 172.16.1.1: bytes=32 time<1ms TTL=255
Reply from 172.16.1.1: bytes=32 time<1ms TTL=255

Ping statistics for 172.16.1.1:
    Packets: Sent = 4, Received = 4, Lost = 0 (0% loss),
Approximate round trip times in milli-seconds:
    Minimum = 0ms, Maximum = 1ms, Average = 0ms
```

```
C:\>ping 10.1.1.10

Pinging 10.1.1.10 with 32 bytes of data:

Reply from 172.16.1.1: Destination host unreachable.
Reply from 172.16.1.1: Destination host unreachable.
Reply from 172.16.1.1: Destination host unreachable.
Reply from 172.16.1.1: Destination host unreachable.

Ping statistics for 10.1.1.10:
    Packets: Sent = 4, Received = 0, Lost = 4 (100% loss),
```

```
C:\>tracert 10.1.1.10

Tracing route to 10.1.1.10 over a maximum of 30 hops:

  1    1 ms      1 ms      0 ms      172.16.1.1
  2    0 ms      *         0 ms      172.16.1.1
  3    *         0 ms      *         Request timed out.
```

```
Gateway of last resort is not set

     10.0.0.0/8 is variably subnetted, 2 subnets, 2 masks
C       10.2.1.0/24 is directly connected, GigabitEthernet0/2
L       10.2.1.10/32 is directly connected, GigabitEthernet0/2
     172.16.0.0/16 is variably subnetted, 2 subnets, 2 masks
C       172.16.1.0/24 is directly connected, GigabitEthernet0/0
L       172.16.1.1/32 is directly connected, GigabitEthernet0/0
```

```
Branch-A#show ip route
Codes: L - local, C - connected, S - static, R - RIP, M - mobile, B - BGP
       D - EIGRP, EX - EIGRP external, O - OSPF, IA - OSPF inter area
       N1 - OSPF NSSA external type 1, N2 - OSPF NSSA external type 2
       E1 - OSPF external type 1, E2 - OSPF external type 2, E - EGP
       i - IS-IS, L1 - IS-IS level-1, L2 - IS-IS level-2, ia - IS-IS inter area
       * - candidate default, U - per-user static route, o - ODR
       P - periodic downloaded static route
```

```
Gateway of last resort is not set

     10.0.0.0/8 is variably subnetted, 2 subnets, 2 masks
C       10.2.1.0/24 is directly connected, GigabitEthernet0/2
L       10.2.1.10/32 is directly c                          itEthernet0/2
     172.16.0.0/16 is variably subne                        , 2 masks
C       172.16.1.0/24 is directly co                        itEthernet0/0
L       172.16.1.1/32 is directly connected, GigabitEthernet0/0
```

Parent Route

```
Gateway of last resort is not set

     10.0.0.0/8 is variably subnetted, 2 subnets, 2 masks
C       10.2.1.0/24 is directly connected, GigabitEthernet0/2
L       10.2.1.10/32 is directly connected, GigabitEthernet0/2
     172.16.0.0/16 is variably subnetted, 2 subnets, 2 masks
C       172.16.1.0/24 is directly connected, GigabitEthernet0/0
L       172.16.1.1/32 is directly connected, GigabitEthernet0/0
```

```
Branch-A#show ip route

Gateway of last resort is 10.2.1.5 to network 0.0.0.0

     2.0.0.0/8 is variably subnetted, 2 subnets, 2 masks
C       2.2.2.0/24 is directly connected, Loopback0
L       2.2.2.2/32 is directly connected, Loopback0
     10.0.0.0/8 is variably subnetted, 3 subnets, 2 masks
O       10.1.1.0/24 [110/2] via 10.2.1.5, 00:01:21, GigabitEthernet0/2
C       10.2.1.0/24 is directly connected, GigabitEthernet0/2
L       10.2.1.10/32 is directly connected, GigabitEthernet0/2
     172.16.0.0/16 is variabl                                  2 masks
C       172.16.1.0/24 is dire                                  thernet0/0
L       172.16.1.1/32 is di                                  Ethernet0/0
     172.20.0.0/24 is subnetted, 1 subnets
O       172.20.1.0/24 [110/2] via 10.2.1.15, 00:01:21, GigabitEthernet0/2
O    192.168.1.0/24 [110/2] via 10.2.1.20, 00:01:11, GigabitEthernet0/2
O*E2 0.0.0.0/0 [110/1] via 10.2.1.5, 00:01:21, GigabitEthernet0/2
```

Dynamically learnt routes

```
Gateway of last resort is 10.2.1.5 to network 0.0.0.0

     2.0.0.0/8 is variably subnetted, 2 subnets, 2 masks
C       2.2.2.0/24 is directly connected, Loopback0
L       2.2.2.2/32 is di                  ed, Loopback0
     10.0.0.0/8 is vari                  3 subnets, 2 masks
O       10.1.1.0/24 [110/2] via 10.2.1.5, 00:05:16, GigabitEthernet0/2
C       10.2.1.0/24 is directly connected, GigabitEthernet0/2
L       10.2.1.10/32 is directly connected, GigabitEthernet0/2
     172.16.0.0/16 is variably subnetted, 2 subnets, 2 masks
C       172.16.1.0/24 is directly connected, GigabitEthernet0/0
L       172.16.1.1/32 is directly connected, GigabitEthernet0/0
     172.20.0.0/24 is subnetted, 1 subnets
O       172.20.1.0/24 [110/2] via 10.2.1.15, 00:05:16, GigabitEthernet0/2
O*E2 0.0.0.0/0 [110/1] via 10.2.1.5, 00:05:16, GigabitEthernet0/2
```

Prefix

```
Gateway of last resort is 10.2.1.5 to network 0.0.0.0

     2.0.0.0/8 is variably subnetted, 2 subnets, 2 masks
C       2.2.2.0/24 is directl                  Loopback0
L       2.2.2.2/32 is direct                  opback0
     10.0.0.0/8 is variabl                  nets, 2 masks
O       10.1.1.0/24 [110/                  00:05:16, GigabitEthernet0/2
C       10.2.1.0/24 is directly connected, GigabitEthernet0/2
L       10.2.1.10/32 is directly connected, GigabitEthernet0/2
     172.16.0.0/16 is variably subnetted, 2 subnets, 2 masks
C       172.16.1.0/24 is directly connected, GigabitEthernet0/0
L       172.16.1.1/32 is directly connected, GigabitEthernet0/0
     172.20.0.0/24 is subnetted, 1 subnets
O       172.20.1.0/24 [110/2] via 10.2.1.15, 00:05:16, GigabitEthernet0/2
O*E2 0.0.0.0/0 [110/1] via 10.2.1.5, 00:05:16, GigabitEthernet0/2
```

Network Mask

```
Gateway of last resort is 10.2.1.5 to network 0.0.0.0

     2.0.0.0/8 is variably subnetted, 2 subnets, 2 masks
C       2.2.2.0/24 is directly connected, Loopback0
L       2.2.2.2/32 is directly connected, Loopback0
     10.0.0.0/8 is variably subnetted, 3 subnets, 2 masks
O       10.1.1.0/24 [110/2] via 10.2.1.5, 00:07:45, GigabitEthernet0/2
C       10.2.1.0/24 is directly connected, GigabitEthernet0/2
L       10.2.1.10/32 is directly connected, Gig
     172.16.0.0/16 is variably subnetted, 2 su
C       172.16.1.0/24 is directly connected,                0
L       172.16.1.1/32 is directly connecte, GigabitEthernet0/0
     172.20.0.0/24 is subnetted, 1 subnets
O       172.20.1.0/24 [110/2] via 10.2.1.15, 00:07:45, GigabitEthernet0/2
O    192.168.1.0/24 [110/2] via 10.2.1.20, 00:07:45, GigabitEthernet0/2
O*E2 0.0.0.0/0 [110/1] via 10.2.1.5, 00:07:45, GigabitEthernet0/2
```

Next-Hop

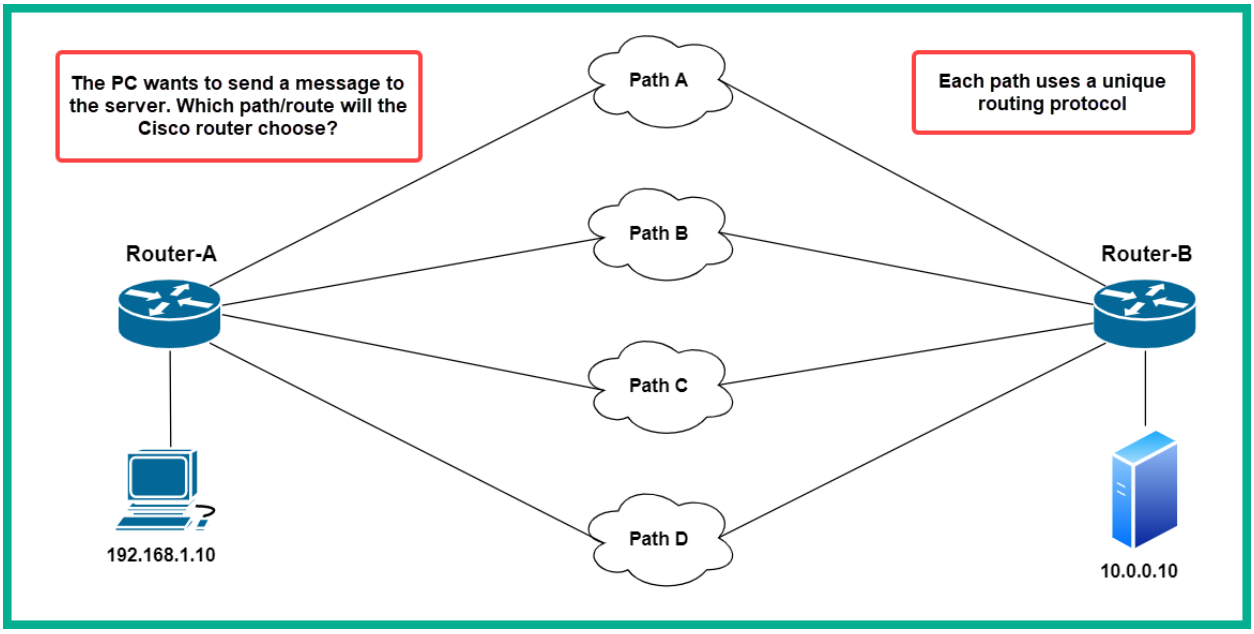

Routing Protocol	Administrative Distance
Connected	0
Static	1
eBGP	20
EIGRP	90
OSPF	110
RIP	120
iBGP	200

```
Gateway of last resort is 10.2.1.5 to network 0.0.0.0

     2.0.0.0/8 is variably subne                    2 masks
C       2.2.2.0/24 is directly                      ck0
L       2.2.2.2/32 is directl                       back0
     10.0.0.0/8 is variabl subnetted, 3 subnets, 2 masks
O       10.1.1.0/24 [110/2] via 10.2.1.5, 00:05:16, GigabitEthernet0/2
C       10.2.1.0/24 is directly connected, GigabitEthernet0/2
L       10.2.1.10/32 is directly connected, GigabitEthernet0/2
     172.16.0.0/16 is variably subnetted, 2 subnets, 2 masks
C       172.16.1.0/24 is directly connected, GigabitEthernet0/0
L       172.16.1.1/32 is directly connected, GigabitEthernet0/0
     172.20.0.0/24 is subnetted, 1 subnets
O       172.20.1.0/24 [110/2] via 10.2.1.15, 00:05:16, GigabitEthernet0/2
O*E2 0.0.0.0/0 [110/1] via 10.2.1.5, 00:05:16, GigabitEthernet0/2
```

Administrative Distance

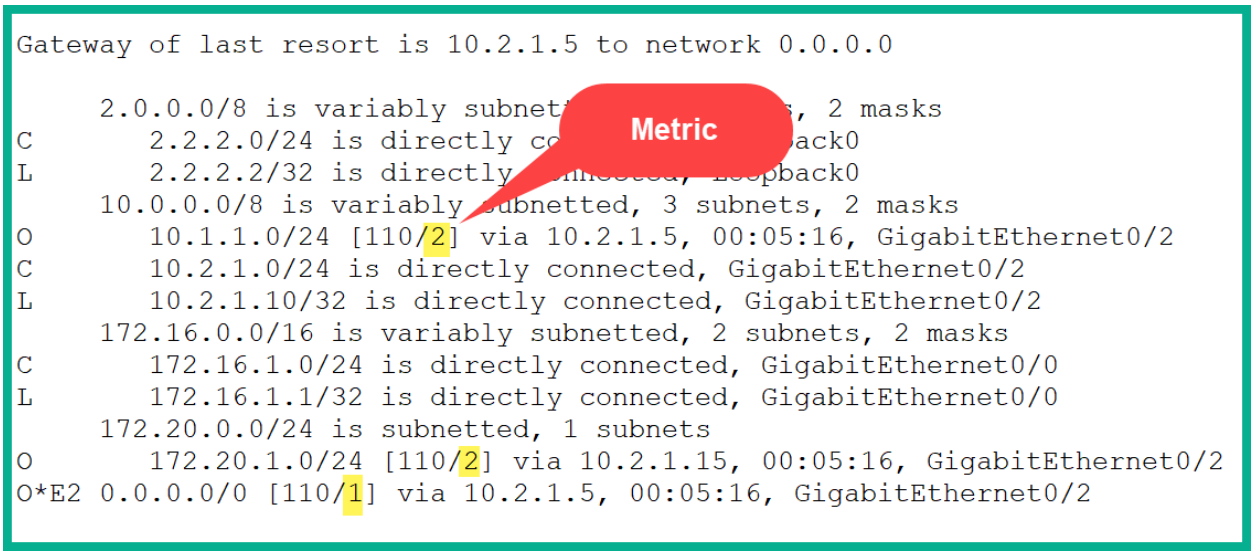
Gateway of last resort is 10.2.1.5 to network 0.0.0.0
2.0.0.0/8 is variably subnet , 2 masks
C 2.2.2.0/24 is directly co ack0
L 2.2.2.2/32 is directly pback0
10.0.0.0/8 is variably ubnetted, 3 subnets, 2 masks
O 10.1.1.0/24 [110/2] via 10.2.1.5, 00:05:16, GigabitEthernet0/2
C 10.2.1.0/24 is directly connected, GigabitEthernet0/2
L 10.2.1.10/32 is directly connected, GigabitEthernet0/2
172.16.0.0/16 is variably subnetted, 2 subnets, 2 masks
C 172.16.1.0/24 is directly connected, GigabitEthernet0/0
L 172.16.1.1/32 is directly connected, GigabitEthernet0/0
172.20.0.0/24 is subnetted, 1 subnets
O 172.20.1.0/24 [110/2] via 10.2.1.15, 00:05:16, GigabitEthernet0/2
O*E2 0.0.0.0/0 [110/1] via 10.2.1.5, 00:05:16, GigabitEthernet0/2
Metric

Chapter 8: Understanding First Hop Redundancy, Static and Dynamic Routing

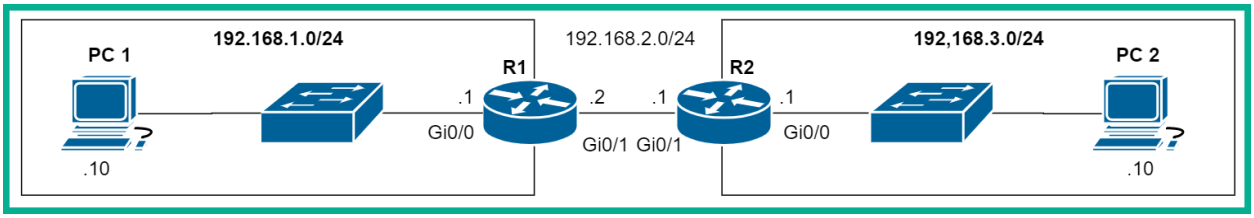


```
R1#show ip route

Gateway of last resort is not set

     192.168.1.0/24 is variably subnetted, 2 subnets, 2 masks
C       192.168.1.0/24 is directly connected, GigabitEthernet0/0
L       192.168.1.1/32 is directly connected, GigabitEthernet0/0
     192.168.2.0/24 is variably subnetted, 2 subnets, 2 masks
C       192.168.2.0/24 is directly connected, GigabitEthernet0/1
L       192.168.2.2/32 is directly connected, GigabitEthernet0/1

R1#
```

```
R3#show ip route
Codes: L - local, C - connected, S - static, R - RIP, M - mobile, B - BGP
       D - EIGRP, EX - EIGRP external, O - OSPF, IA - OSPF inter area
       N1 - OSPF NSSA external type 1, N2 - OSPF NSSA external type 2
       E1 - OSPF external type 1, E2 - OSPF external type 2, E - EGP
       i - IS-IS, L1 - IS-IS level-1, L2 - IS-IS level-2, ia - IS-IS inter area
       * - candidate default, U - per-user static route, o - ODR
       P - periodic downloaded static route

Gateway of last resort is not

     172.31.0.0/16 is vari                    ets, 5 masks
S       172.31.0.0/24 is  rectly connected, Serial0/0/1
S       172.31.1.0/25  s directly connected, Serial0/0/1
C       172.31.1.128/26 is directly connected, GigabitEthernet0/0
L       172.31.1.129/32 is directly connected, GigabitEthernet0/0
S       172.31.1.192/30 is directly connected, Serial0/0/1
C       172.31.1.196/30 is directly connected, Serial0/0/1
L       172.31.1.198/32 is directly connected, Serial0/0/1
```

Host Route

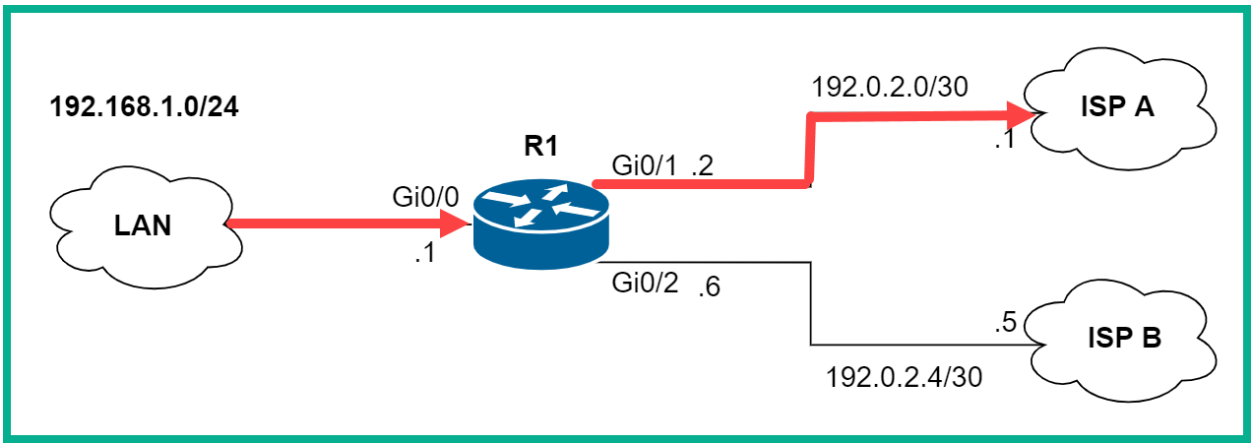
192.168.1.0/24
LAN
Gi0/0
.1
R1
Gi0/1 .2
192.0.2.0/30
.1
ISP A
Gi0/2 .6
.5
ISP B
192.0.2.4/30

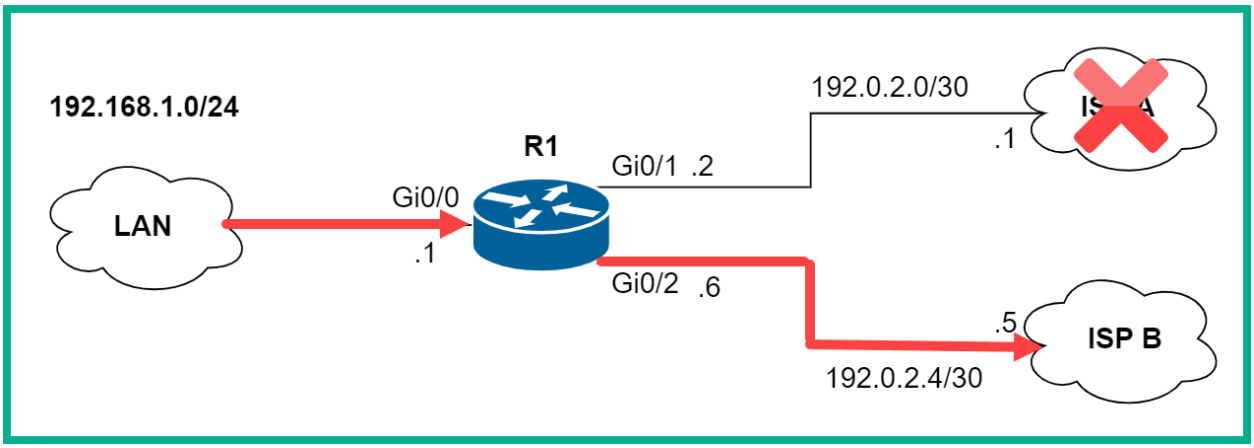
192.168.1.0/24
LAN
Gi0/0
.1
R1
Gi0/1 .2
192.0.2.0/30
.1
Gi0/2 .6
.5
ISP B
192.0.2.4/30

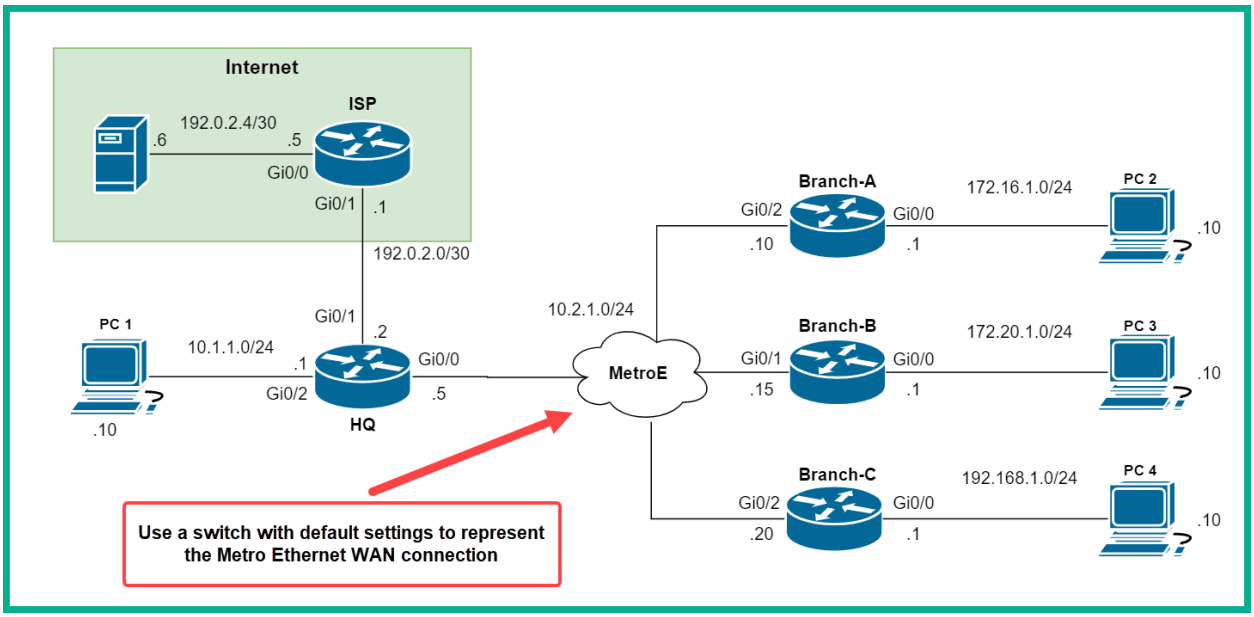
Internet
ISP
.6
192.0.2.4/30
.5
Gi0/0
Gi0/1
.1
192.0.2.0/30
PC 1
10.1.1.0/24
.1
Gi0/2
Gi0/1
.2
Gi0/0
.5
HQ
.10
10.2.1.0/24
MetroE
Branch-A
Gi0/2
.10
Gi0/0
.1
172.16.1.0/24
PC 2
.10
Branch-B
Gi0/1
.15
Gi0/0
.1
172.20.1.0/24
PC 3
.10
Branch-C
Gi0/2
.20
Gi0/0
.1
192.168.1.0/24
PC 4
.10
Use a switch with default settings to represent the Metro Ethernet WAN connection

```
C:\>ping 10.1.1.1

Pinging 10.1.1.1 with 32 bytes of data:

Reply from 10.1.1.1: bytes=32 time<1ms TTL=255
Reply from 10.1.1.1: bytes=32 time<1ms TTL=255
Reply from 10.1.1.1: bytes=32 time<1ms TTL=255
Reply from 10.1.1.1: bytes=32 time<1ms TTL=255

Ping statistics for 10.1.1.1:
    Packets: Sent = 4, Received = 4, Lost = 0 (0% loss),
Approximate round trip times in milli-seconds:
    Minimum = 0ms, Maximum = 0ms, Average = 0ms
```

```
C:\>ping 172.16.1.10

Pinging 172.16.1.10 with 32 bytes of data:

Reply from 10.1.1.1: Destination host unreachable.
Reply from 10.1.1.1: Destination host unreachable.
Reply from 10.1.1.1: Destination host unreachable.
Reply from 10.1.1.1: Destination host unreachable.

Ping statistics for 172.16.1.10:
    Packets: Sent = 4, Received = 0, Lost = 4 (100% loss),
```

```
Gateway of last resort is not set

     10.0.0.0/8 is variably subnetted, 4 subnets, 2 masks
C       10.1.1.0/24 is directly connected, GigabitEthernet0/2
L       10.1.1.1/32 is directly connected, GigabitEthernet0/2
C       10.2.1.0/24 is directly connected, GigabitEthernet0/0
L       10.2.1.5/32 is directly connected, GigabitEthernet0/0
```

```
     10.0.0.0/8 is variably subnetted, 4 subnets, 2 masks
C       10.1.1.0/24 is directly connected, GigabitEthernet0/2
L       10.1.1.1/32 is directly connected, GigabitEthernet0/2
C       10.2.1.0/24 is directly connected, GigabitEthernet0/0
L       10.2.1.5/32 is directly connected, GigabitEthernet0/0
     172.16.0.0/24 is subnetted, 1 subnets
S       172.16.1.0/24 [1/0] via 10.2.1.10
     172.20.0.0/24 is subnetted, 1 subnets
S       172.20.1.0/24 [1/0] via 10.2.1.15
S    192.168.1.0/24 [1/0] via 10.2.1.20
```

```
C:\>ping 172.16.1.10

Pinging 172.16.1.10 with 32 bytes of data:

Request timed out.
Request timed out.
Request timed out.
Request timed out.

Ping statistics for 172.16.1.10:
    Packets: Sent = 4, Received = 0, Lost = 4 (100% loss),
```

PC is not receiving any ICMP Echo Replies

```
Gateway of last resort is not set

     10.0.0.0/8 is variably subnetted, 2 subnets, 2 masks
C       10.2.1.0/24 is directly connected, GigabitEthernet0/2
L       10.2.1.10/32 is directly connected, GigabitEthernet0/2
     172.16.0.0/16 is variably subnetted, 2 subnets, 2 masks
C       172.16.1.0/24 is directly connected, GigabitEthernet0/0
L       172.16.1.1/32 is directly connected, GigabitEthernet0/0
```

```
     10.0.0.0/8 is variably subnetted, 3 subnets, 2 masks
S       10.1.1.0/24 [1/0] via 10.2.1.5
C       10.2.1.0/24 is directly connected, GigabitEthernet0/2
L       10.2.1.10/32 is directly connected, GigabitEthernet0/2
     172.16.0.0/16 is variably subnetted, 2 subnets, 2 masks
C       172.16.1.0/24 is directly connected, GigabitEthernet0/0
L       172.16.1.1/32 is directly connected, GigabitEthernet0/0
     172.20.0.0/24 is subnetted, 1 subnets
S       172.20.1.0/24 [1/0] via 10.2.1.15
S    192.168.1.0/24 [1/0] via 10.2.1.20
```

```
C:\>ping 172.16.1.10

Pinging 172.16.1.10 with 32 bytes of data:

Reply from 172.16.1.10: bytes=32 time<1ms TTL=126
Reply from 172.16.1.10: bytes=32 time<1ms TTL=126
Reply from 172.16.1.10: bytes=32 time=1ms TTL=126
Reply from 172.16.1.10: bytes=32 time=4ms TTL=126

Ping statistics for 172.16.1.10:
    Packets: Sent = 4, Received = 4, Lost = 0 (0% loss),
Approximate round trip times in milli-seconds:
    Minimum = 0ms, Maximum = 4ms, Average = 1ms
```

```
C:\>tracert 172.16.1.10

Tracing route to 172.16.1.10 over a maximum of 30 hops:

  1    0 ms      0 ms      0 ms      10.1.1.1
  2    0 ms      1 ms      0 ms      10.2.1.10
  3    0 ms      0 ms      0 ms      172.16.1.10

Trace complete.
```

```
Branch-A#show ip route

Gateway of last resort is 10.2.1.5 to network 0.0.0.0

     10.0.0.0/8 is variably subnetted, 3 subnets, 2 masks
S       10.1.1.0/24 [1/0] via 10.2.1.5
C       10.2.1.0/24 is directly connected, GigabitEthernet0/2
L       10.2.1.10/32 is directly connected, GigabitEthernet0/2
     172.16.0.0/16 is variably subnetted, 2 subnets, 2 masks
C       172.16.1.0/24 is directly connected, GigabitEthernet0/0
L       172.16.1.1/32 is directly connected, GigabitEthernet0/0
     172.20.0.0/24 is subnetted, 1 subnets
S       172.20.1.0/24 [1/0] via 10.2.1.15
S    192.168.1.0/24 [1/0] via 10.2.1.20
S*   0.0.0.0/0 [1/0] via 10.2.1.5
```

```
C:\>ping 192.0.2.6

Pinging 192.0.2.6 with 32 bytes of data:

Reply from 192.0.2.6: bytes=32 time<1ms TTL=125
Reply from 192.0.2.6: bytes=32 time=11ms TTL=125
Reply from 192.0.2.6: bytes=32 time=12ms TTL=125
Reply from 192.0.2.6: bytes=32 time=12ms TTL=125

Ping statistics for 192.0.2.6:
    Packets: Sent = 4, Received = 4, Lost = 0 (0% loss),
Approximate round trip times in milli-seconds:
    Minimum = 0ms, Maximum = 12ms, Average = 8ms
```

```
C:\>tracert 192.0.2.6

Tracing route to 192.0.2.6 over a maximum of 30 hops:

  1    0 ms      0 ms      0 ms      172.16.1.1
  2    0 ms      1 ms      0 ms      10.2.1.5
  3    0 ms      0 ms      11 ms     192.0.2.1
  4    11 ms     0 ms      14 ms     192.0.2.6

Trace complete.
```

```
Branch-A#show ip route

Gateway of last resort is 10.2.1.5 to network 0.0.0.0

     10.0.0.0/8 is variably subnetted, 3 subnets, 2 masks
S       10.1.1.0/24 [1/0] via 10.2.1.5
C       10.2.1.0/24 is directly connected, GigabitEthernet0/2
L       10.2.1.10/32 is directly connected, GigabitEthernet0/2
     172.16.0.0/16 is variably subnetted, 2 subnets, 2 masks
C       172.16.1.0/24 is directly connected, GigabitEthernet0/0
L       172.16.1.1/32 is directly connected, GigabitEthernet0/0
     172.20.0.0/24 is subnetted, 1 subnets
S       172.20.1.0/24 [1/0] via 10.2.1.15
S    192.168.1.0/24 [1/0] via 10.2.1.20
S*   0.0.0.0/0 [1/0] via 10.2.1.5
```

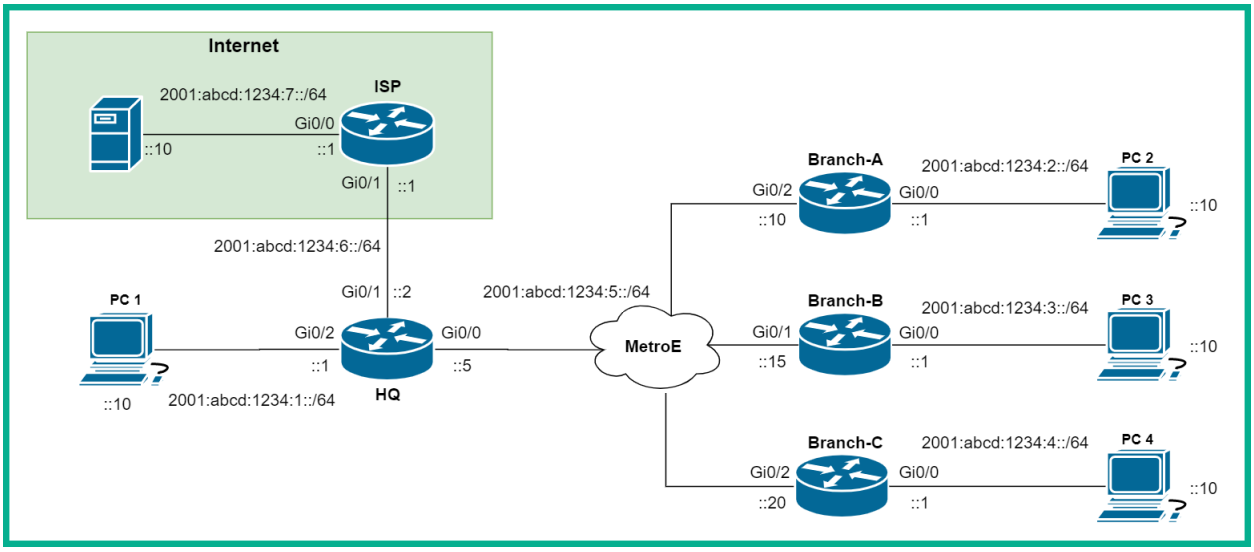

Device	Interface	IPv6 Address
ISP	Gi 0/0	2001:abcd:1234:7::5/64
		FE80::1
	Gi 0/1	2001:abcd:1234:6::1/64
		FE80::1
HQ	Gi 0/0	2001:abcd:1234:5::5/64
		FE80::1
	Gi 0/1	2001:abcd:1234:6::2/64
		FE80::2
	Gi 0/2	2001:abcd:1234:1::1/64
		FE80::1

Device	Interface	IPv6 Address
Branch-A	Gi 0/0	2001:abcd:1234:2::1/64
		FE80::1
	Gi 0/2	2001:abcd:1234:5::10/64
		FE80::2
Branch-B	Gi 0/0	2001:abcd:1234:3::1/64
		FE80::1
	Gi 0/1	2001:abcd:1234:5::15/64
		FE80::3
Branch-C	Gi 0/0	2001:abcd:1234:4::1/64
		FE80::1
	Gi 0/2	2001:abcd:1234:5::20/64
		FE80::4

Device	Interface	IPv6 Address	Default Gateway
PC 1	Fa 0	2001:ABCD:1234:1::10/64	2001:ABCD:1234:1::1
		FE80::2	
PC 2	Fa 0	2001:ABCD:1234:2::10/64	2001:ABCD:1234:2::1
		FE80::2	
PC 3	Fa 0	2001:ABCD:1234:3::10/64	2001:ABCD:1234:3::1
		FE80::2	
PC 4	Fa 0	2001:ABCD:1234:4::10/64	2001:ABCD:1234:4::1
		FE80::2	
Server	Fa 0	2001:ABCD:1234:7::10/64	2001:ABCD:1234:7::1
		FE80::2	

```
C:\>ping 2001:abcd:1234:4::10

Pinging 2001:abcd:1234:4::10 with 32 bytes of data:

Reply from 2001:ABCD:1234:4::10: bytes=32 time<1ms TTL=125
Reply from 2001:ABCD:1234:4::10: bytes=32 time=10ms TTL=125
Reply from 2001:ABCD:1234:4::10: bytes=32 time=10ms TTL=125
Reply from 2001:ABCD:1234:4::10: bytes=32 time=11ms TTL=125

Ping statistics for 2001:ABCD:1234:4::10:
    Packets: Sent = 4, Received = 4, Lost = 0 (0% loss),
Approximate round trip times in milli-seconds:
    Minimum = 0ms, Maximum = 11ms, Average = 7ms
```

```
C:\>tracert 2001:abcd:1234:4::10

Tracing route to 2001:abcd:1234:4::10 over a maximum of 30 hops:

  1    0 ms      0 ms      0 ms      2001:ABCD:1234:2::1
  2    0 ms      0 ms      0 ms      2001:ABCD:1234:5::5
  3    0 ms      10 ms     10 ms     2001:ABCD:1234:5::20
  4    12 ms     12 ms     10 ms     2001:ABCD:1234:4::10

Trace complete.
```

```
Branch-A#show ipv6 route
IPv6 Routing Table - 6 entries
Codes: C - Connected, L - Local, S - Static, R - RIP, B - BGP
       U - Per-user Static route, M - MIPv6
       I1 - ISIS L1, I2 - ISIS L2, IA - ISIS interarea, IS - ISIS summary
       O - OSPF intra, OI - OSPF inter, OE1 - OSPF ext 1, OE2 - OSPF ext 2
       ON1 - OSPF NSSA ext 1, ON2 - OSPF NSSA ext 2
       D - EIGRP, EX - EIGRP external
S   ::/0 [1/0]
     via 2001:ABCD:1234:5::5
C   2001:ABCD:1234:2::/64 [0/0]
     via GigabitEthernet0/0, directly connected
L   2001:ABCD:1234:2::1/128 [0/0]
     via GigabitEthernet0/0, receive
C   2001:ABCD:1234:5::/64 [0/0]
     via GigabitEthernet0/2, directly connected
L   2001:ABCD:1234:5::10/128 [0/0]
     via GigabitEthernet0/2, receive
L   FF00::/8 [0/0]
     via Null0, receive
```

```
HQ#show ipv6 interface brief
GigabitEthernet0/0          [up/up]
    FE80::1
    2001:ABCD:1234:5::5
GigabitEthernet0/1          [up/up]
    FE80::2
    2001:ABCD:1234:6::2
GigabitEthernet0/2          [up/up]
    FE80::1
    2001:ABCD:1234:1::1
Vlan1                       [administratively down/down]
    unassigned
```

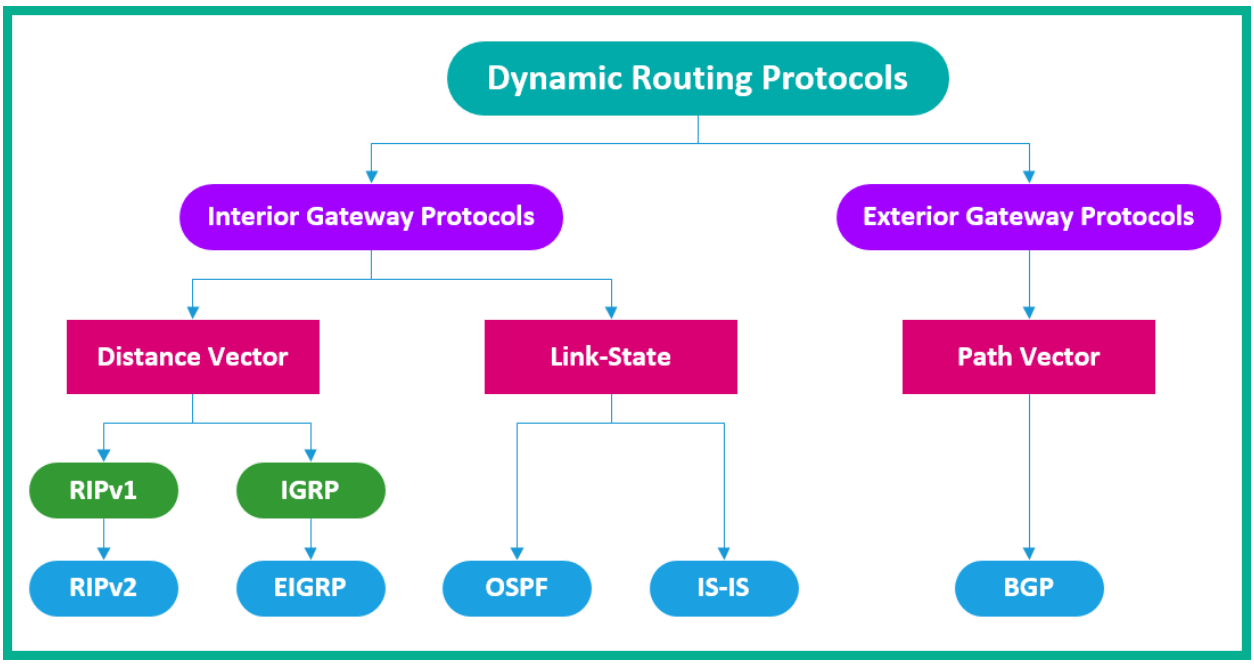
Dynamic Routing Protocols
Interior Gateway Protocols
Exterior Gateway Protocols
Distance Vector
Link-State
Path Vector
RIPv1
IGRP
RIPv2
EIGRP
OSPF
IS-IS
BGP

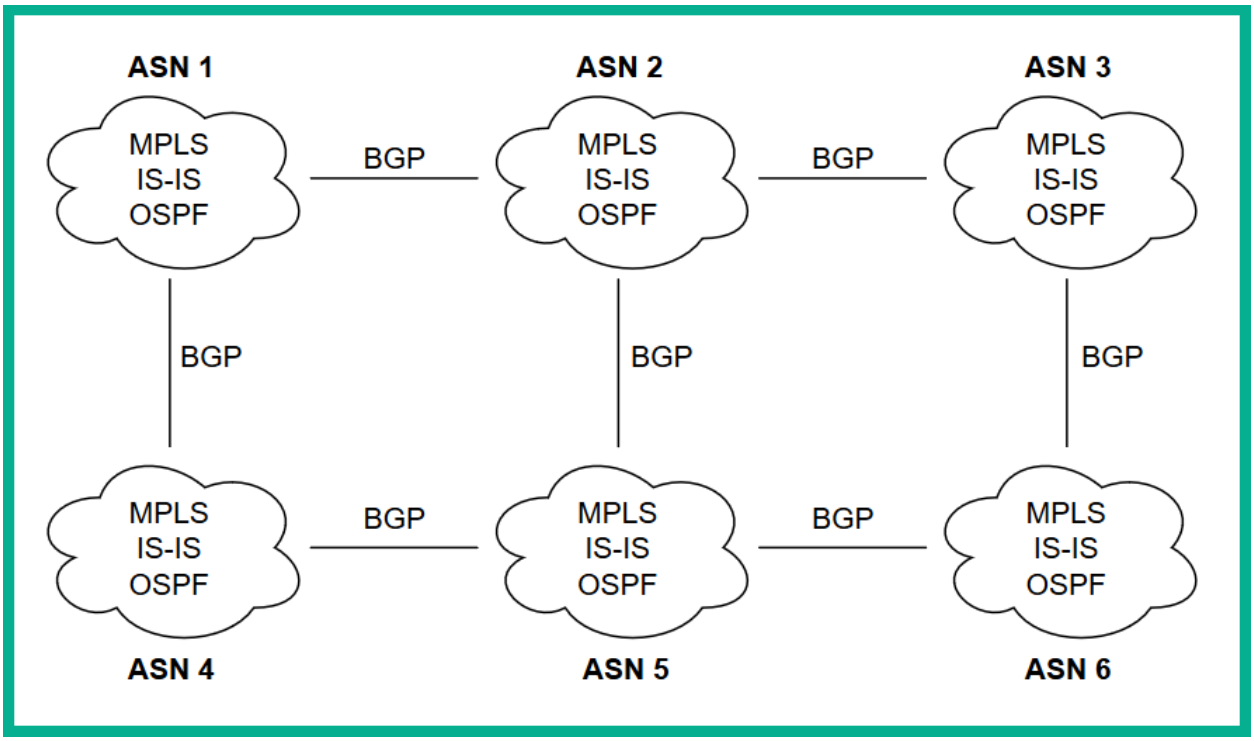
ASN 1
ASN 2
ASN 3
MPLS
IS-IS
OSPF
BGP
ASN 4
ASN 5
ASN 6

```
route-views>show bgp
BGP table version is [redacted], local router ID is [redacted]
Status codes: s suppressed, d damped, h history, * valid, > best, i - internal,
              r RIB-failure, S Stale, m multipath, b backup-path, f RT-Filter,
              x best-external, a additional-path, c RIB-compressed,
Origin codes: i - IGP, e - EGP, ? - incomplete
RPKI validation codes: V valid, I invalid, N Not found

     Network          Next Hop            Metric LocPrf Weight Path
Nr>  0.0.0.0          162.251.163.2                          0 53767 3257 i
V*   1.0.0.0/24       202.93.8.242                           0 24441 13335 i
V*                    212.66.96.126                          0 20912 13335 i
V*                    91.218.184.60                          0 49788 13335 i
V*                    37.139.139.17             0            0 57866 13335 i
V*                    140.192.8.16                           0 54728 20130 6939 13335 i
V*                    194.85.40.15              0            0 3267 13335 i
```

```
Branch-A#show interfaces gigabitEthernet 0/2
GigabitEthernet0/2 is up, line protocol is up (connected)
  Hardware is CN Gigabit Ethernet, address is 0000.0c41.b003
  Description: WAN interface to HQ
  Internet address is 10.2.1.10/24
  MTU 1500 bytes, BW 1000000 Kbit, DLY 100 usec,
     reliability 255/255, txload 1/255, rxload 1/255
  Encapsulation ARPA, loopback not set
  Keepalive set (10 sec)
  Full-duplex, 100Mb/s, media type is RJ45
```

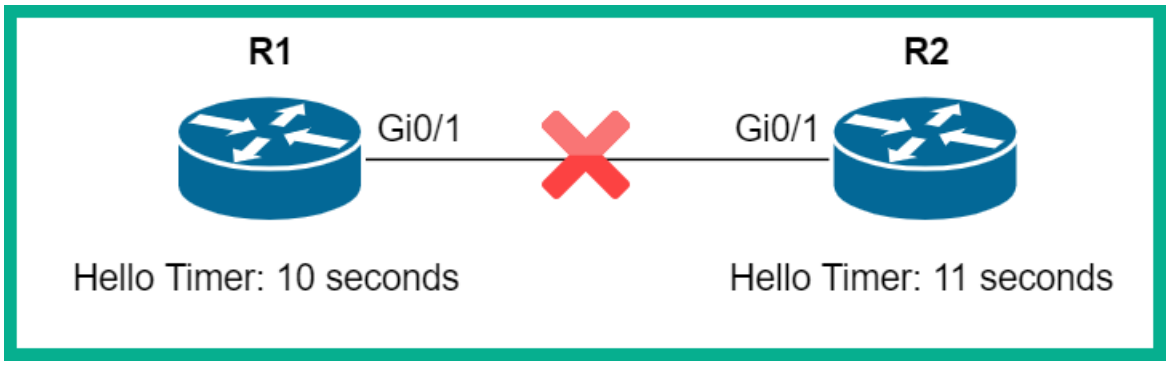


```
R2#show ip ospf interface gigabitEthernet 0/1

GigabitEthernet0/1 is up, line protocol is up
  Internet address is 192.168.1.1/30, Area 0
  Process ID 1, Router ID 192.168.1.1, Network Type BROADCAST, Cost: 1
  Transmit Delay is 1 sec, State WAITING, Priority 1
  No designated router on this network
  No backup designated router on this network
  Timer intervals configured, Hello 11, Dead 40, Wait 40, Retransmit 5
    Hello due in 00:00:08
  Index 1/1, flood queue length 0
  Next 0x0(0)/0x0(0)
```

```
Branch-C#show ip ospf neighbor

Neighbor ID     Pri   State           Dead Time   Address         Interface
3.3.3.3           1   2WAY/DROTHER    00:00:35    10.2.1.15       GigabitEthernet0/2
2.2.2.2           1   FULL/BDR        00:00:35    10.2.1.10       GigabitEthernet0/2
4.4.4.4           1   FULL/DR         00:00:35    10.2.1.5        GigabitEthernet0/2
Branch-C#
```

```
 Number of areas transit capable is 0
 External flood list length 0
 IETF NSF helper support enabled
 Cisco NSF helper support enabled
 Reference bandwidth unit is 100 mbps
    Area BACKBONE(0)
        Number of interfaces in this area is 2
        Area has no authentication
        SPF algorithm last executed 00:00:42.221 ago
        SPF algorithm executed 3 times
        Area ranges are
        Number of LSA 3. Checksum Sum 0x018A6A
        Number of opaque link LSA 0. Checksum Sum 0x000000
        Number of DCbitless LSA 0
        Number of indication LSA 0
        Number of DoNotAge LSA 0
        Flood list length 0
```

```
Branch-A#show interfaces GigabitEthernet 0/2
GigabitEthernet0/2 is up, line protocol is up
  Hardware is iGbE, address is 0ce5.e030.2302 (bia 0ce5.e030.2302)
  Description: Connected to WAN
  Internet address is 10.2.1.10/24
  MTU 1500 bytes, BW 1000000 Kbit/sec, DLY 10 usec,
     reliability 255/255, txload 1/255, rxload 1/255
  Encapsulation ARPA, loopback not set
```

```
Branch-A#show ip ospf interface GigabitEthernet 0/2
GigabitEthernet0/2 is up, line protocol is up
  Internet Address 10.2.1.10/24, Area 0, Attached via Network Statement
  Process ID 1, Router ID 2.2.2.2, Network Type BROADCAST, Cost: 1
  Topology-MTID    Cost    Disabled    Shutdown      Topology Name
        0           1         no          no            Base
  Transmit Delay is 1 sec, State BDR, Priority 1
  Designated Router (ID) 4.4.4.4, Interface address 10.2.1.5
  Backup Designated router (ID) 2.2.2.2, Interface address 10.2.1.10
  Timer intervals configured, Hello 10, Dead 40, Wait 40, Retransmit 5
```

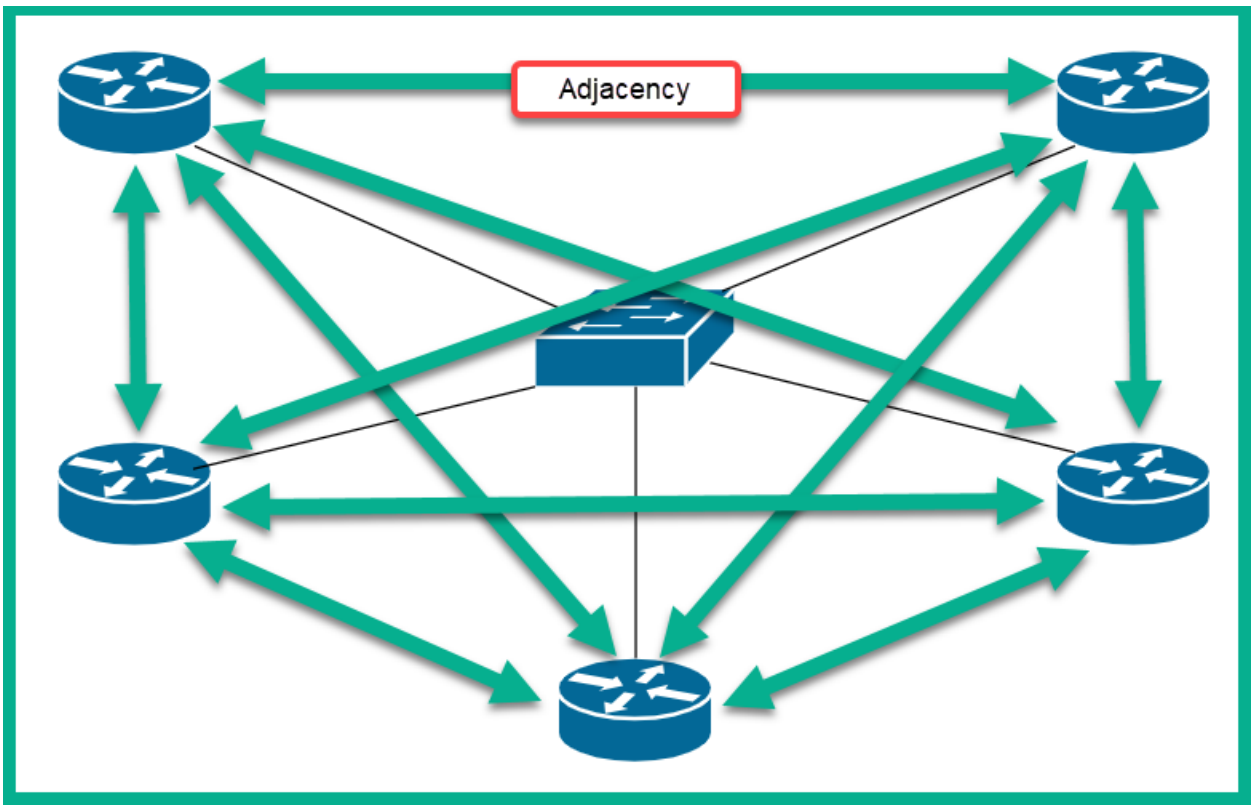


```
Router(config)#router ospf 10
Router(config-router)#router-id 1.2.3.4
Router(config-router)#end
Router#
%SYS-5-CONFIG_I: Configured from console by console

Router#show ip protocols

Routing Protocol is "ospf 10"
  Outgoing update filter list for all interfaces is not set
  Incoming update filter list for all interfaces is not set
  Router ID 1.2.3.4
  Number of areas in this router is 0. 0 normal 0 stub 0 nssa
  Maximum path: 4
  Routing for Networks:
  Routing Information Sources:
    Gateway         Distance      Last Update
  Distance: (default is 110)
```

Static configuration

Verification

Static Configuration Method

```
Router(config)#interface loopback 0
Router(config-if)#ip address 1.1.1.1 255.255.255.255
Router(config-if)#no shutdown
Router(config-if)#end
Router#
%SYS-5-CONFIG_I: Configured from console by console

Router#show ip protocols

Routing Protocol is "ospf 10"
  Outgoing update filter list for all interfaces is not set
  Incoming update filter list for all interfaces is not set
  Router ID 1.1.1.1
  Number of areas in this router is 0. 0 normal 0 stub 0 nssa
  Maximum path: 4
  Routing for Networks:
  Routing Information Sources:
    Gateway         Distance      Last Update
  Distance: (default is 110)
```

Loopback interface created

Verification

Loopback Interface Method

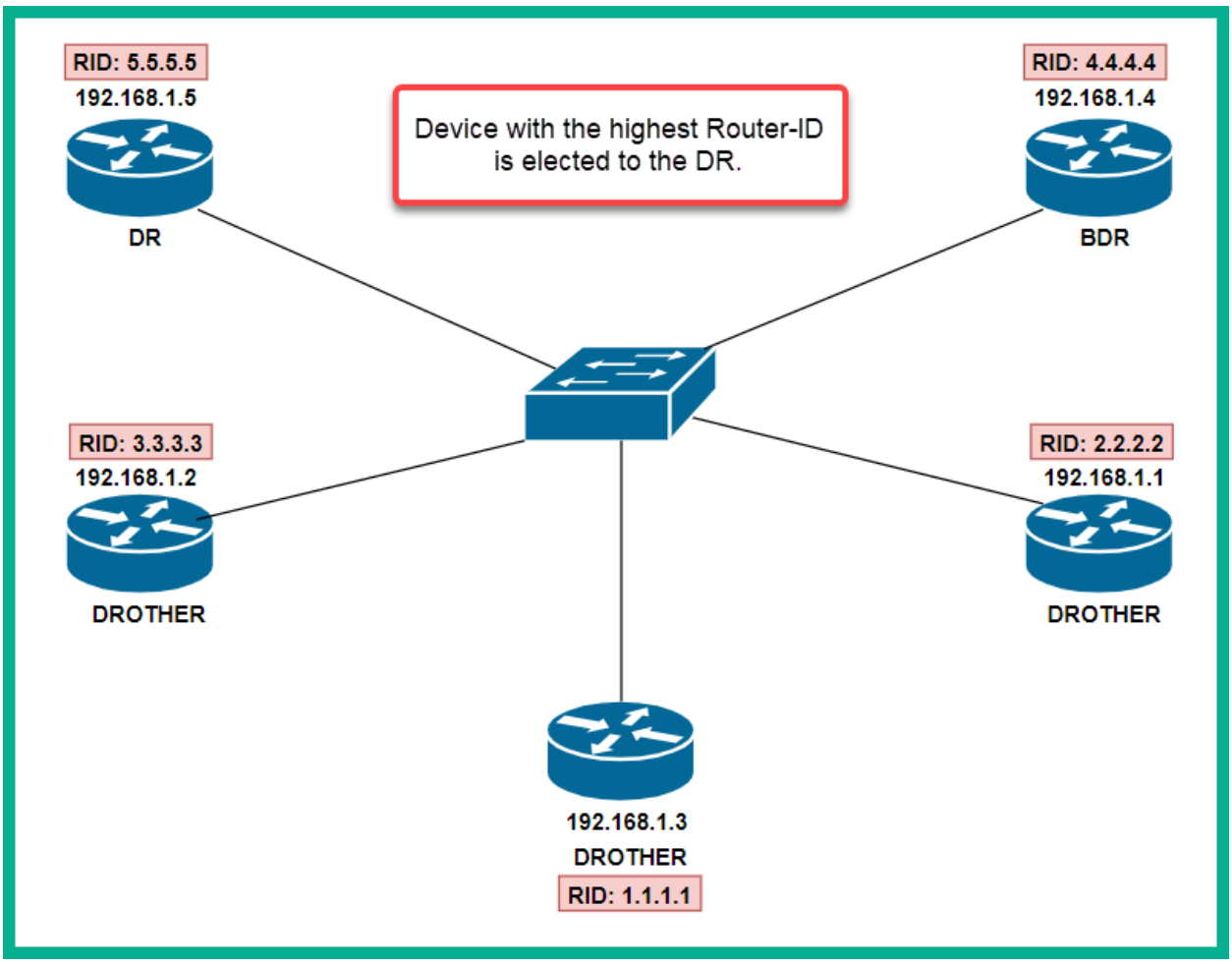
RID: 5.5.5.5
192.168.1.5
DR
Device with the highest Router-ID is elected to the DR.
RID: 4.4.4.4
192.168.1.4
BDR
RID: 3.3.3.3
192.168.1.2
DROTHER
RID: 2.2.2.2
192.168.1.1
DROTHER
192.168.1.3
DROTHER
RID: 1.1.1.1

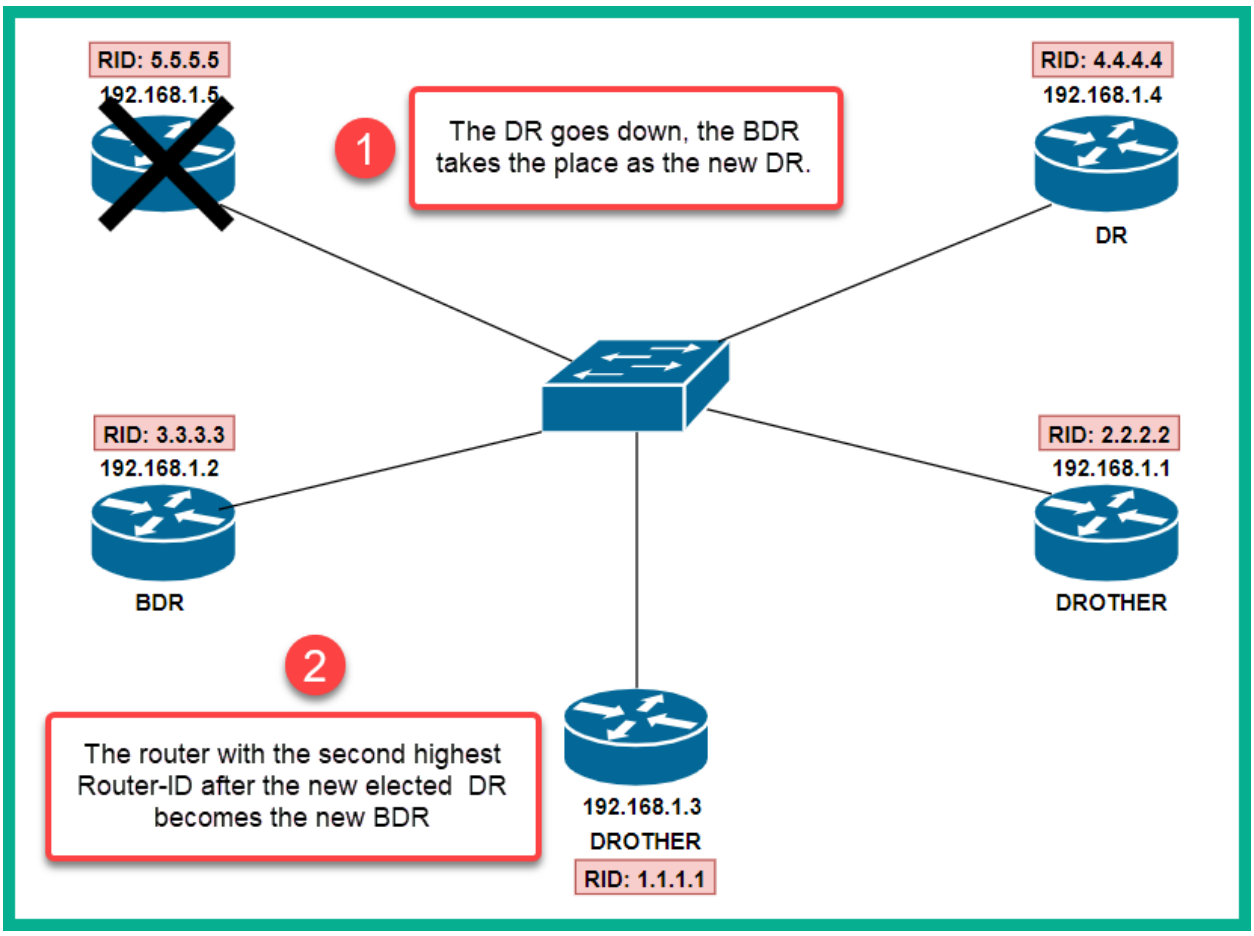
RID: 5.5.5.5
192.168.1.5
1
The DR goes down, the BDR takes the place as the new DR.
RID: 4.4.4.4
192.168.1.4
DR
RID: 3.3.3.3
192.168.1.2
BDR
RID: 2.2.2.2
192.168.1.1
DROTHER
2
The router with the second highest Router-ID after the new elected DR becomes the new BDR
192.168.1.3
DROTHER
RID: 1.1.1.1

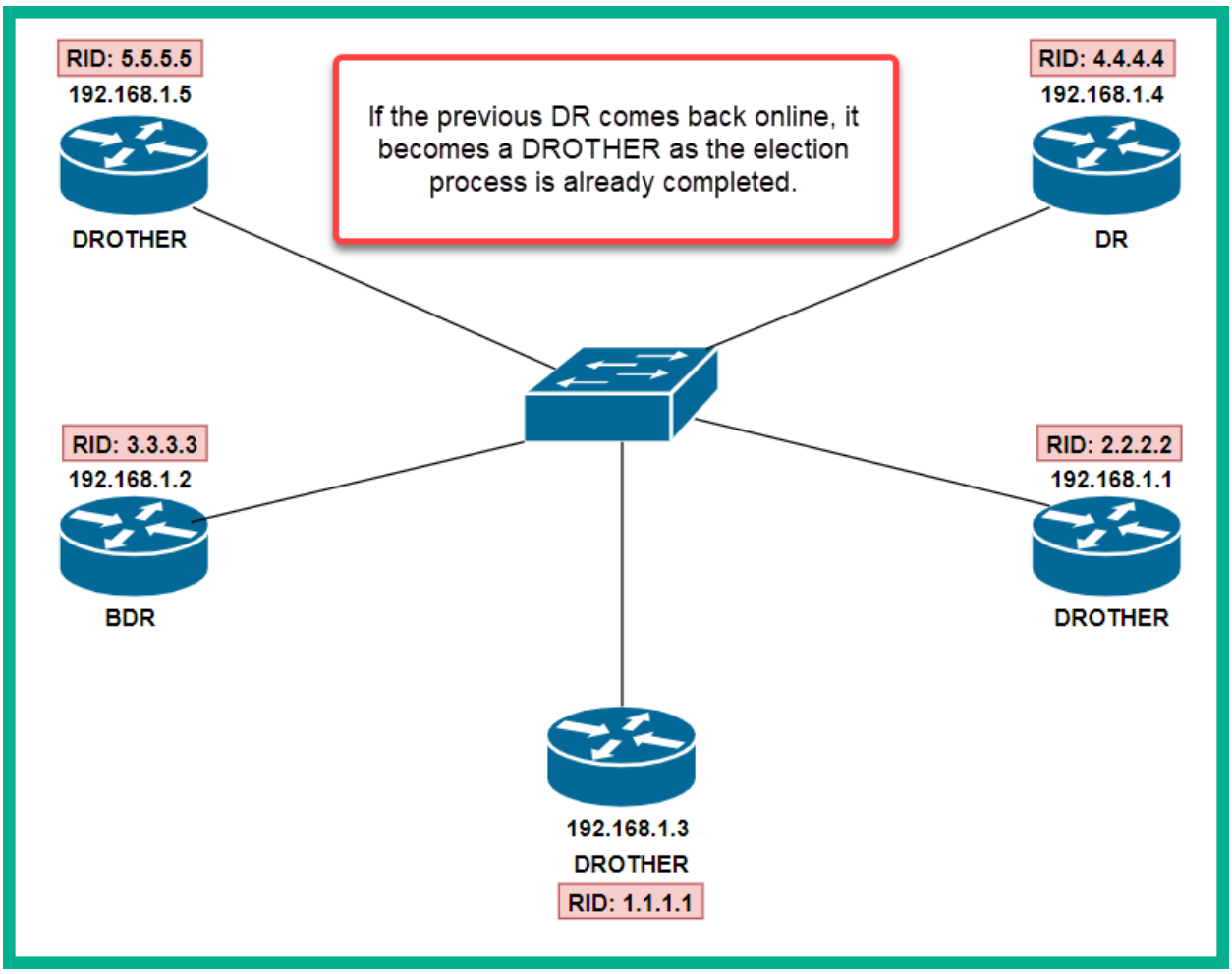
RID: 5.5.5.5
192.168.1.5
DROTHER
If the previous DR comes back online, it becomes a DROTHER as the election process is already completed.
RID: 4.4.4.4
192.168.1.4
DR
RID: 3.3.3.3
192.168.1.2
BDR
RID: 2.2.2.2
192.168.1.1
DROTHER
192.168.1.3
DROTHER
RID: 1.1.1.1

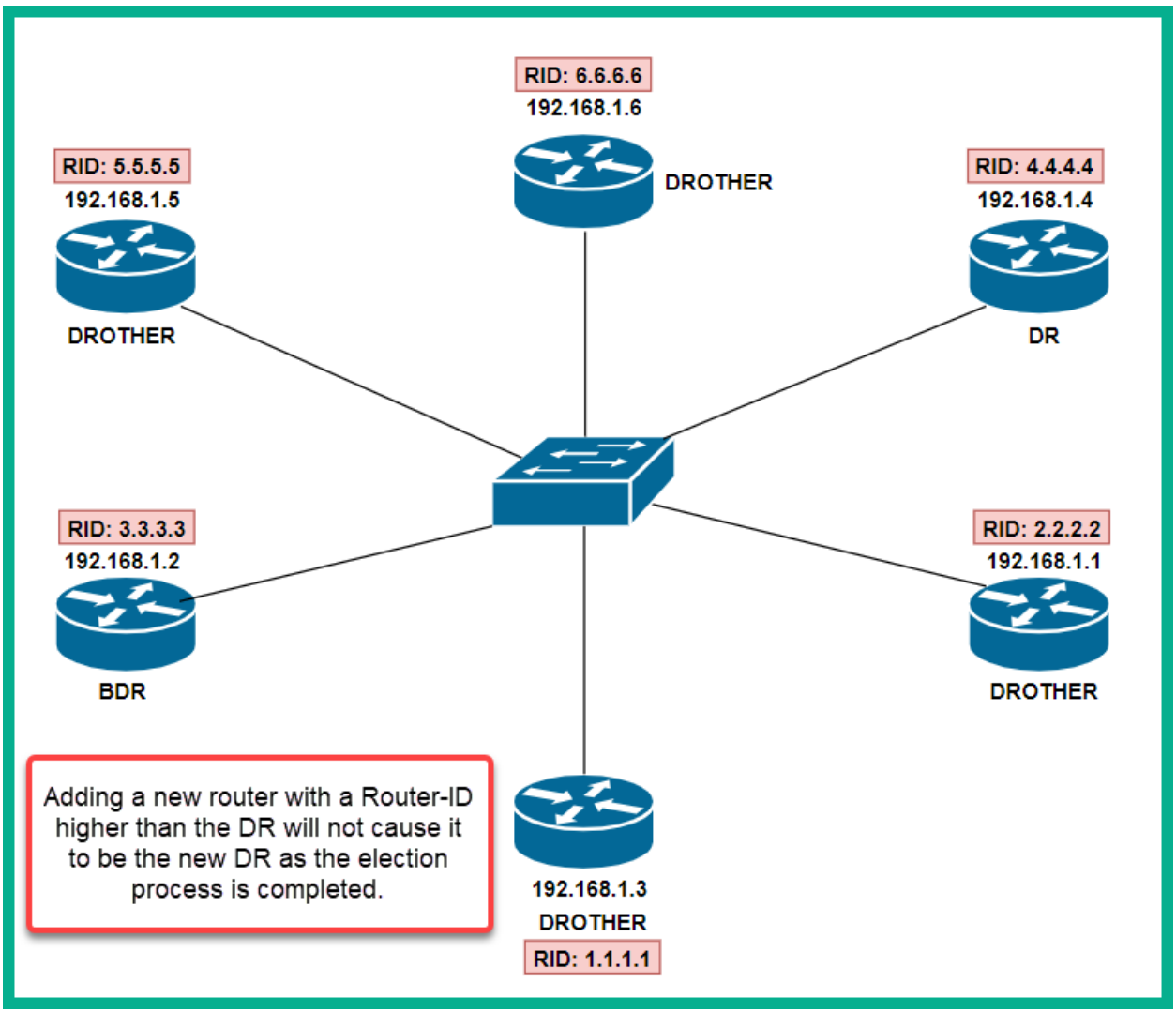

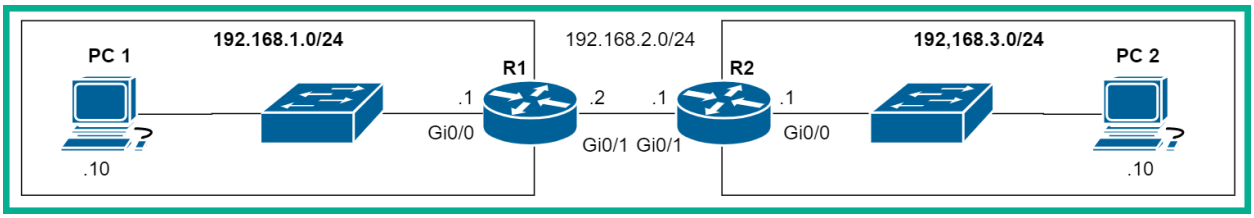

Broadcast Address		255	255	255	255
Subnet Mask	−	255	255	255	0
Wildcard Mask		0	0	0	255

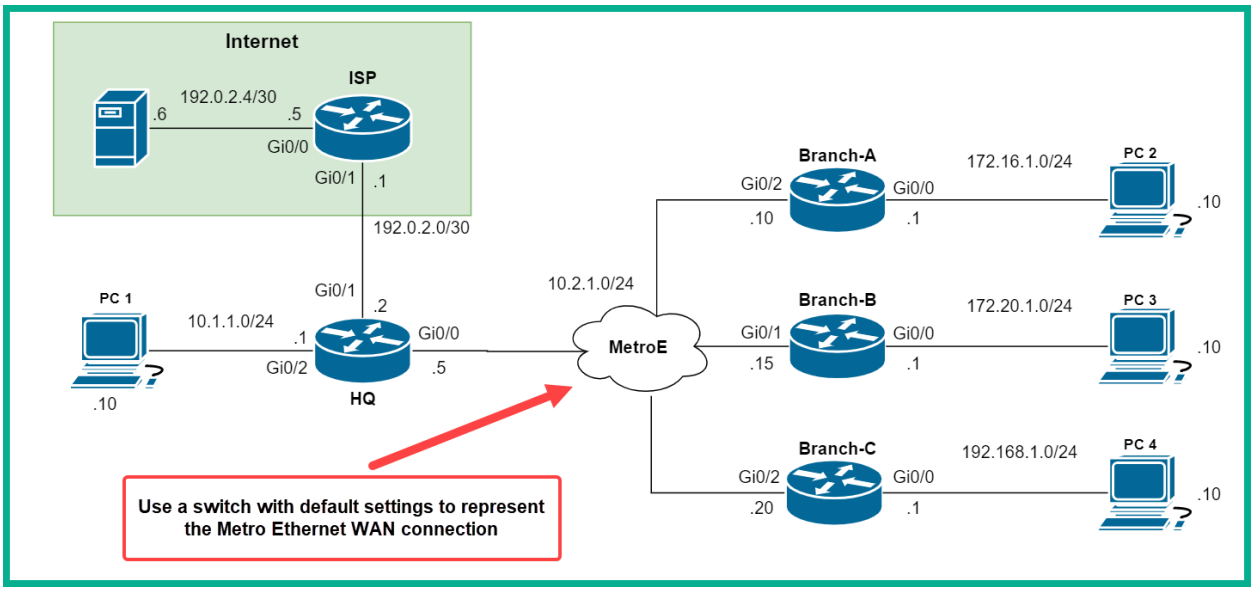


```
Branch-A#show ip route
Gateway of last resort is 10.2.1.5 to network 0.0.0.0

     10.0.0.0/8 is variably subnetted, 3 subnets, 2 masks
O       10.1.1.0/24 [110/2] via 10.2.1.5, 00:37:01, GigabitEthernet0/2
C       10.2.1.0/24 is directly connected, GigabitEthernet0/2
L       10.2.1.10/32 is directly connected, GigabitEthernet0/2
     172.16.0.0/16 is variably subnetted, 2 subnets, 2 masks
C       172.16.1.0/24 is directly connected, GigabitEthernet0/0
L       172.16.1.1/32 is directly connected, GigabitEthernet0/0
     172.20.0.0/24 is subnetted, 1 subnets
O       172.20.1.0/24 [110/2] via 10.2.1.15, 00:33:19, GigabitEthernet0/2
O    192.168.1.0/24 [110/2] via 10.2.1.20, 00:32:11, GigabitEthernet0/2
O*E2 0.0.0.0/0 [110/1] via 10.2.1.5, 00:30:01, GigabitEthernet0/2
```

```
Branch-A#show ip protocols

Routing Protocol is "ospf 1"
  Outgoing update filter list for all interfaces is not set
  Incoming update filter list for all interfaces is not set
  Router ID 2.2.2.2
  Number of areas in this router is 1. 1 normal 0 stub 0 nssa
  Maximum path: 4
  Routing for Networks:
    172.16.1.0 0.0.0.255 area 0
    10.2.1.0 0.0.0.255 area 0
```

process-id

```
  Passive Interface(s):
    Vlan1
    GigabitEthernet0/0
    GigabitEthernet0/1
  Routing Information Sources:
    Gateway         Distance      Last Update
    1.1.1.1              110      00:04:44
    2.2.2.2              110      00:09:27
    3.3.3.3              110      00:05:46
    4.4.4.4              110      00:02:30
  Distance: (default is 110)
```

```
Branch-A#show ip ospf neighbor

Neighbor ID     Pri   State           Dead Time   Address         Interface
4.4.4.4           1   FULL/DR         00:00:34    10.2.1.5        GigabitEthernet0/2
3.3.3.3           1   FULL/BDR        00:00:38    10.2.1.15       GigabitEthernet0/2
1.1.1.1           1   2WAY/DROTHER    00:00:31    10.2.1.20       GigabitEthernet0/2
Branch-A#
```

```
Branch-A#show ip ospf interface GigabitEthernet 0/2

GigabitEthernet0/2 is up, line protocol is up
  Internet address is 10.2.1.10/24, Area 0
  Process ID 1, Router ID 2.2.2.2, Network Type BROADCAST, Cost: 1
  Transmit Delay is 1 sec, State DROTHER, Priority 1
  Designated Router (ID) 4.4.4.4, Interface address 10.2.1.5
  Backup Designated Router (ID) 3.3.3.3, Interface address 10.2.1.15
  Timer intervals configured, Hello 10, Dead 40, Wait 40, Retransmit 5
    Hello due in 00:00:09
  Index 2/2, flood queue length 0
  Next 0x0(0)/0x0(0)
  Last flood scan length is 1, maximum is 1
  Last flood scan time is 0 msec, maximum is 0 msec
  Neighbor Count is 3, Adjacent neighbor count is 2
    Adjacent with neighbor 4.4.4.4  (Designated Router)
    Adjacent with neighbor 3.3.3.3  (Backup Designated Router)
  Suppress hello for 0 neighbor(s)
Branch-A#
```

```
Branch-A#show ip ospf interface brief
Interface    PID   Area            IP Address/Mask    Cost  State Nbrs F/C
Gi0/2        1     0               10.2.1.10/24       1     BDR   3/3
Gi0/0        1     0               172.16.1.1/24      1     DR    0/0
Branch-A#
```

```
Branch-A#ping 192.0.2.6 source 172.16.1.1
Type escape sequence to abort.
Sending 5, 100-byte ICMP Echos to 192.0.2.6, timeout is 2 seconds:
Packet sent with a source address of 172.16.1.1
!!!!!
Success rate is 100 percent (5/5), round-trip min/avg/max = 9/14/23 ms
Branch-A#
```

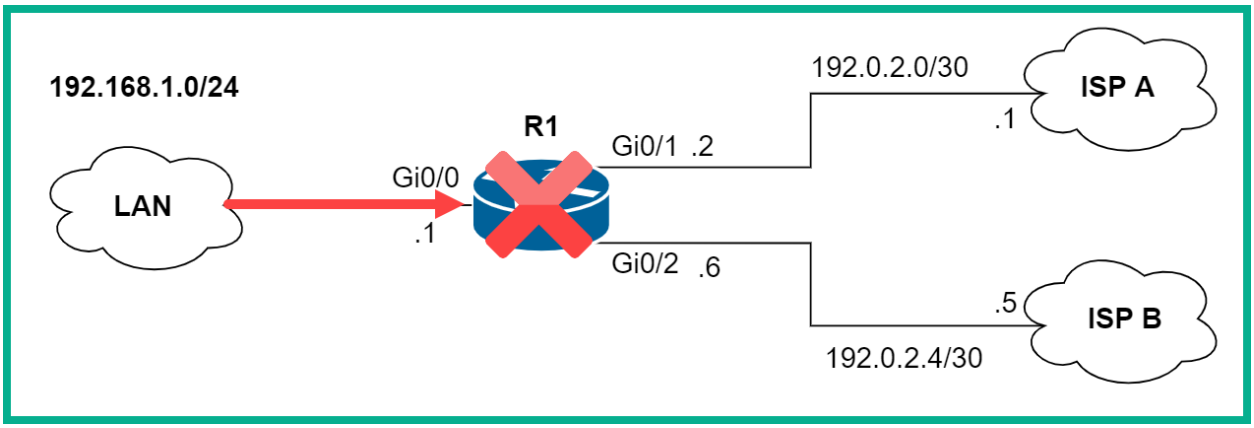

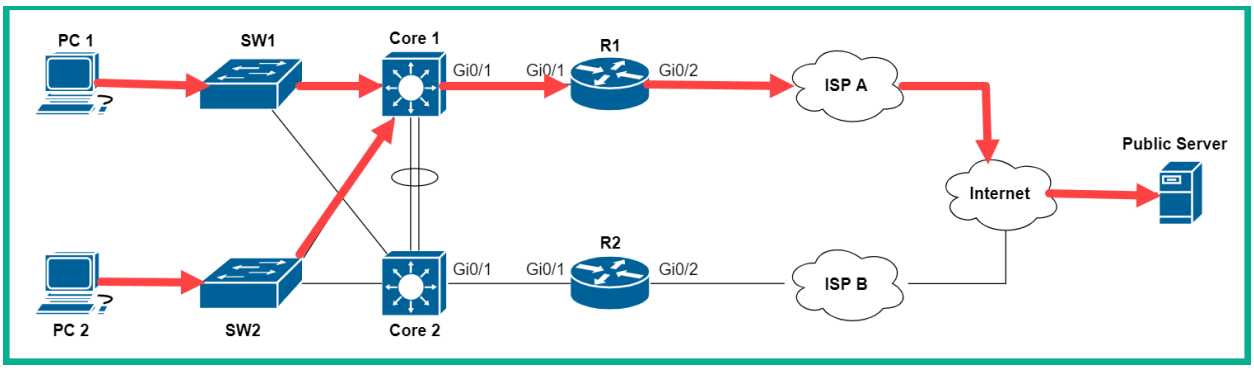

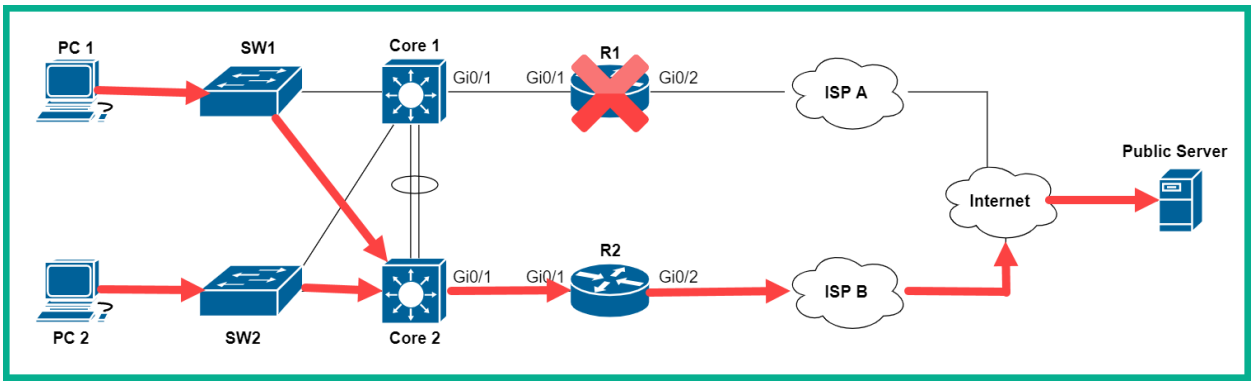

Version 1	Version 2
Enabled by default on Cisco IOS 15	Not enabled by default
Supports group numbers between 0 to 255	Support group numbers between 0 to 4095
Uses multicast address of 224.0.0.2	Uses multicast address of 224.0.0.102
Uses virtual MAC address range 0000.0C07.AC00 to 0000.0C07.ACFF	Uses virtual MAC address range from 0000.0C9F.F000 to 0000.0C9F.FFFF for IPv4 and 0005.73A0.0000 through 0005.73A0.0FFF for IPv6 addresses
Does not support authentication	Uses MD5 for authentication

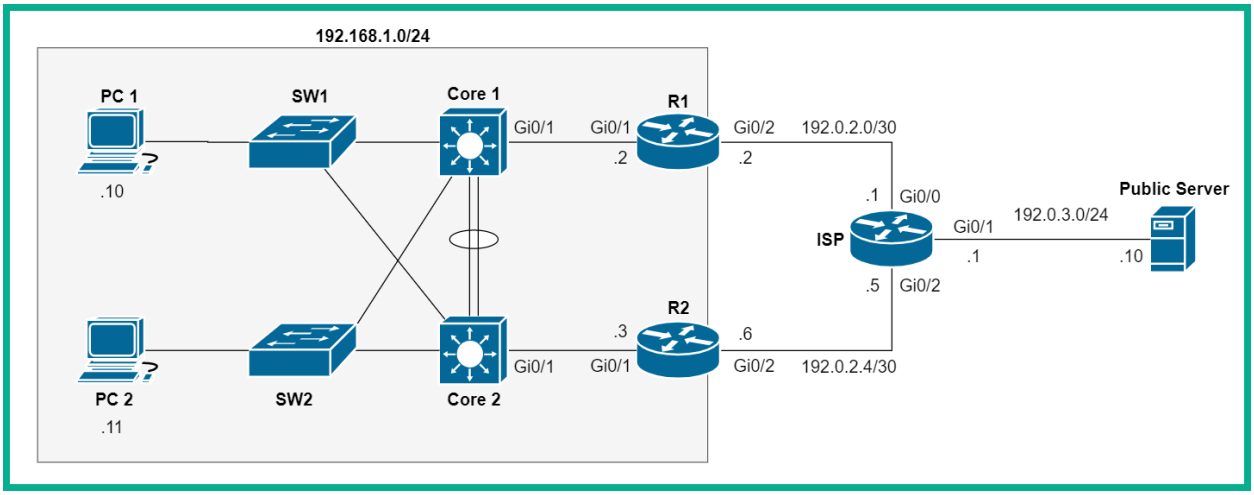


```
R1#show standby
GigabitEthernet0/1 - Group 1 (version 2)
  State is Active
    15 state changes, last state change 00:21:43
  Virtual IP address is 192.168.1.1
  Active virtual MAC address is 0000.0C9F.F001
    Local virtual MAC address is 0000.0C9F.F001 (v2 default)
  Hello time 3 sec, hold time 10 sec
    Next hello sent in 0.638 secs
  Preemption enabled
  Active router is local
  Standby router is 192.168.1.3, priority 100 (expires in 9 sec)
  Priority 150 (configured 150)
  Group name is hsrp-Gig0/1-1 (default)
R1#
```

```
R2#show standby
GigabitEthernet0/1 - Group 1 (version 2)
  State is Standby
    13 state changes, last state change 00:22:03
  Virtual IP address is 192.168.1.1
  Active virtual MAC address is 0000.0C9F.F001
    Local virtual MAC address is 0000.0C9F.F001 (v2 default)
  Hello time 3 sec, hold time 10 sec
    Next hello sent in 1.031 secs
  Preemption disabled
  Active router is 192.168.1.2, priority 150 (expires in 8 sec)
    MAC address is 0000.0C9F.F001
  Standby router is local
  Priority 100 (default 100)
  Group name is hsrp-Gig0/1-1 (default)
R2#
```

```
R1#show standby brief
                     P indicates configured to preempt.
                     |
Interface   Grp  Pri P State    Active          Standby         Virtual IP
Gig0/1      1    150 P Active   local           192.168.1.3     192.168.1.1
R1#
```

```
C:\>tracert 192.0.3.10

Tracing route to 192.0.3.10 over a maximum of 30 hops:

  1    1 ms       0 ms       0 ms       192.168.1.2
  2    0 ms       0 ms       1 ms       192.0.2.1
  3    1 ms       0 ms       0 ms       192.0.3.10

Trace complete.
```

```
C:\>tracert 192.0.3.10

Tracing route to 192.0.3.10 over a maximum of 30 hops:

  1    1 ms      0 ms      0 ms      192.168.1.3
  2    0 ms      0 ms      0 ms      192.0.2.5
  3    0 ms      0 ms      1 ms      192.0.3.10

Trace complete.
```

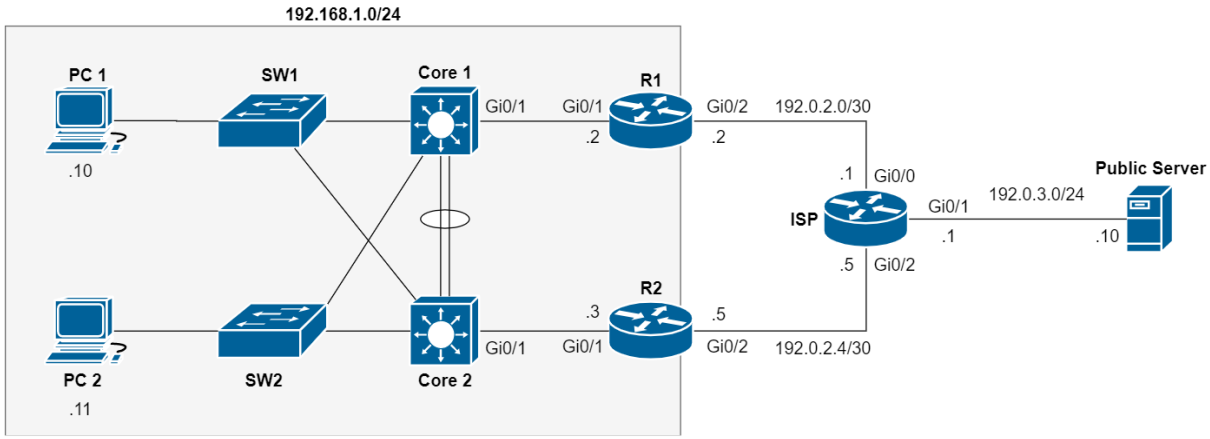


```
R1#show vrrp
GigabitEthernet0/1 - Group 1
  State is Backup
  Virtual IP address is 192.168.1.1
  Virtual MAC address is 0000.5e00.0101
  Advertisement interval is 1.000 sec
  Preemption enabled
  Priority is 100
  Master Router is 192.168.1.3, priority is 100
  Master Advertisement interval is 1.000 sec
  Master Down interval is 3.609 sec (expires in 2.774 sec)
```

```
R1#show vrrp brief
Interface          Grp Pri Time  Own Pre State   Master addr     Group addr
Gi0/1              1   100 3609      Y  Backup  192.168.1.3     192.168.1.1
R1#
```

```
R2#show vrrp
GigabitEthernet0/1 - Group 1
  State is Master
  Virtual IP address is 192.168.1.1
  Virtual MAC address is 0000.5e00.0101
  Advertisement interval is 1.000 sec
  Preemption enabled
  Priority is 100
  Master Router is 192.168.1.3 (local), priority is 100
  Master Advertisement interval is 1.000 sec
  Master Down interval is 3.609 sec
```

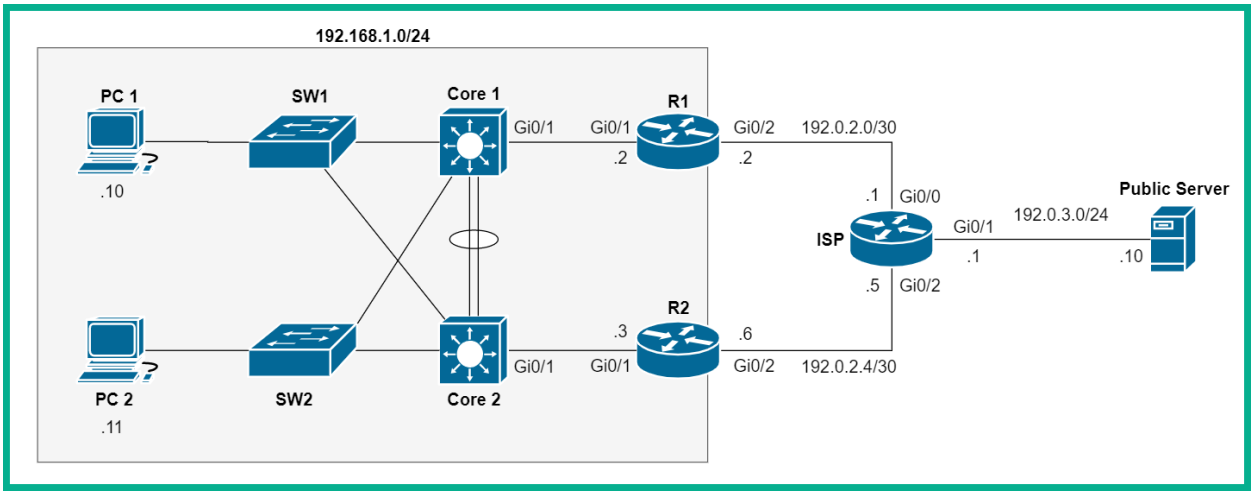


```
R1#show glbp
GigabitEthernet0/1 - Group 1
  State is Active
    1 state change, last state change 00:01:08
  Virtual IP address is 192.168.1.1
  Hello time 3 sec, hold time 10 sec
    Next hello sent in 1.696 secs
  Redirect time 600 sec, forwarder timeout 14400 sec
  Preemption disabled
  Active is local
  Standby is 192.168.1.3, priority 100 (expires in 7.808 sec)
  Priority 100 (default)
  Weighting 100 (default 100), thresholds: lower 1, upper 100
  Load balancing: round-robin
  Group members:
    0c32.2d2f.c901 (192.168.1.2) local
    0c32.2dd8.7301 (192.168.1.3)
  There are 2 forwarders (1 active)
```

```
R1#show glbp brief
Interface   Grp  Fwd Pri State    Address         Active router   Standby router
Gi0/1       1    -   100 Active   192.168.1.1     local           192.168.1.3
Gi0/1       1    1   -   Active   0007.b400.0101  local           -
Gi0/1       1    2   -   Listen   0007.b400.0102  192.168.1.3     -
R1#
```

Chapter 9: Configuring Network Address Translation (NAT)

Class	Network Address Block	Address Range
A	10.0.0.0/8	10.0.0.0 - 10.255.255.255
B	172.16.0.0/12	172.16.0.0 - 172.31.255.255
C	192.168.0.0/24	192.168.0.0 - 192.168.255.255

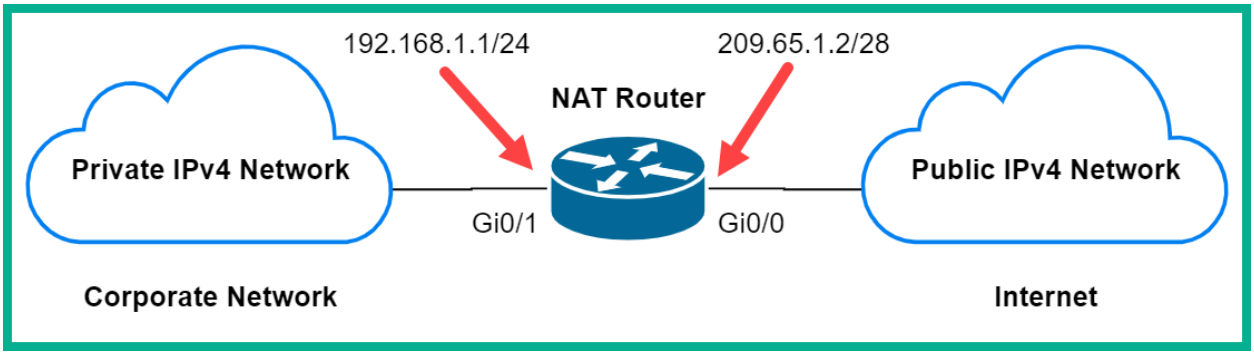

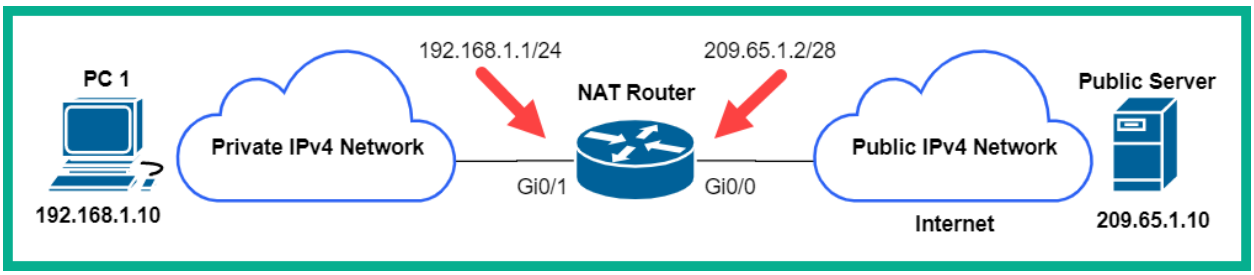

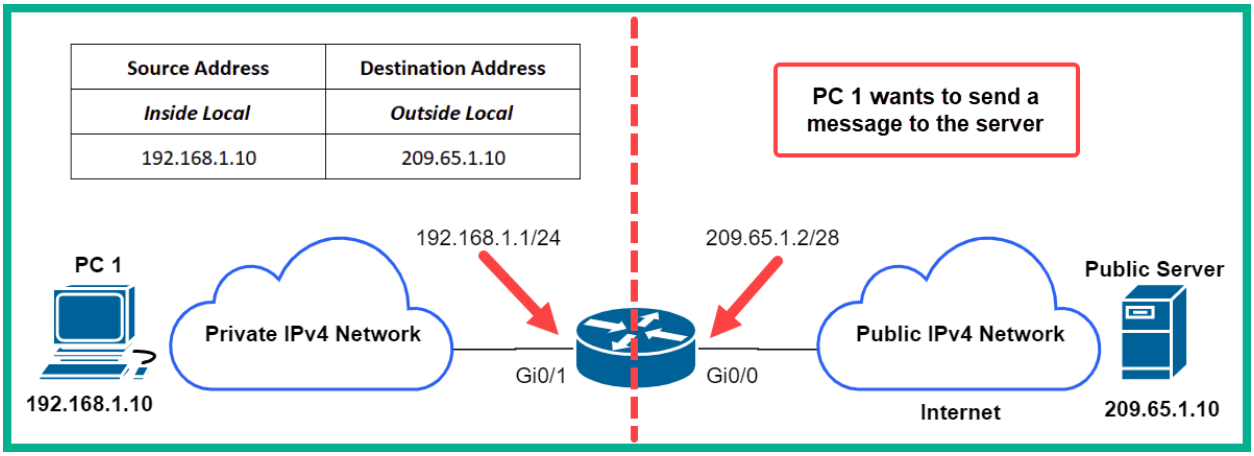

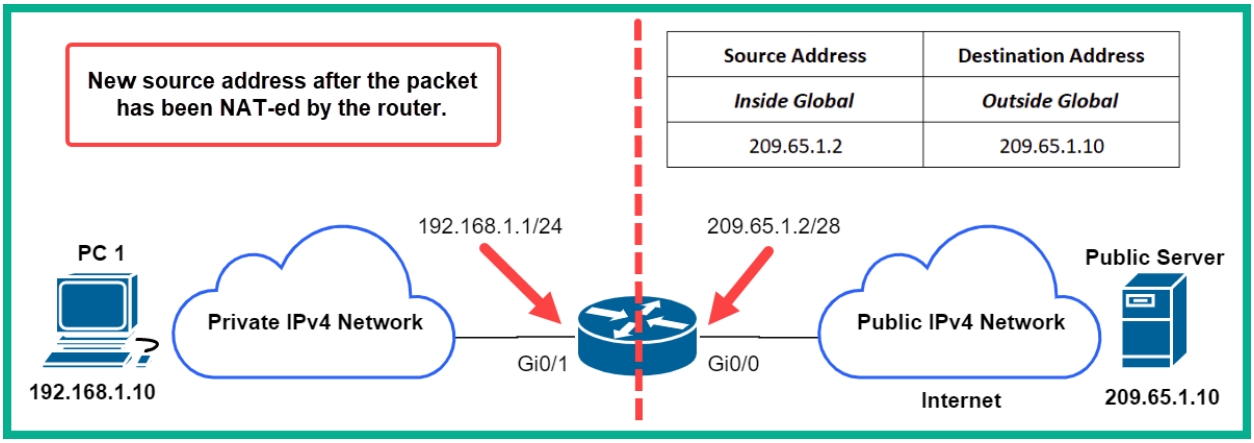
New source address after the packet has been NAT-ed by the router.
Source Address
Destination Address
Inside Global
Outside Global
209.65.1.2
209.65.1.10
PC 1
192.168.1.10
192.168.1.1/24
Private IPv4 Network
Gi0/1
209.65.1.2/28
Gi0/0
Public IPv4 Network
Internet
Public Server
209.65.1.10

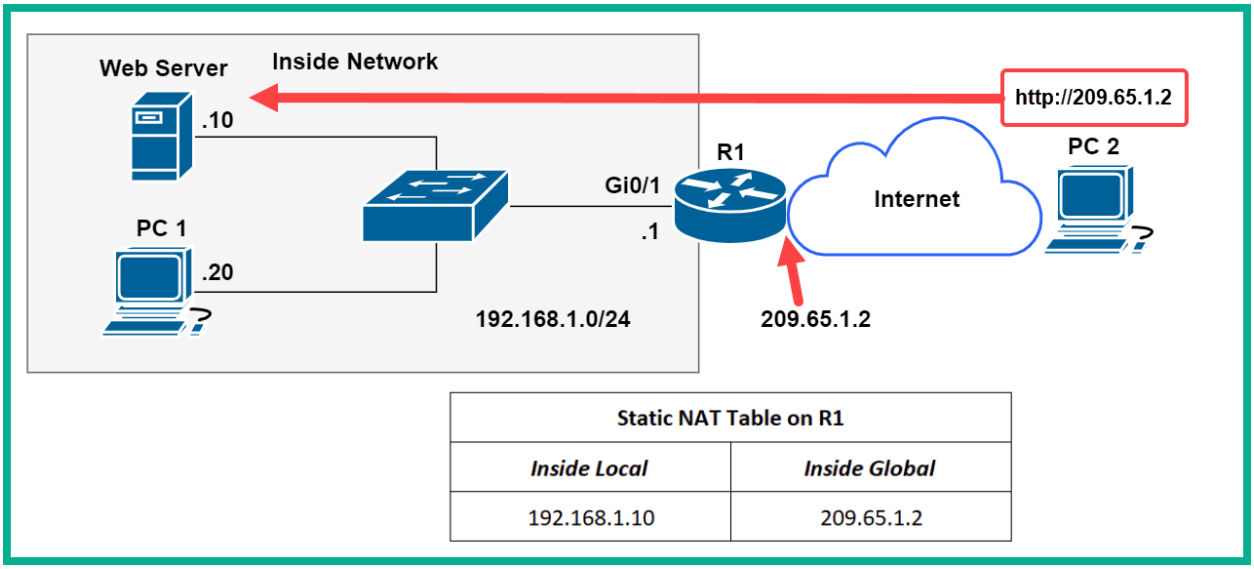
Web Server
Inside Network
http://209.65.1.2
.10
PC 1
.20
Gi0/1
.1
R1
Internet
PC 2
192.168.1.0/24
209.65.1.2
Static NAT Table on R1
Inside Local
Inside Global
192.168.1.10
209.65.1.2

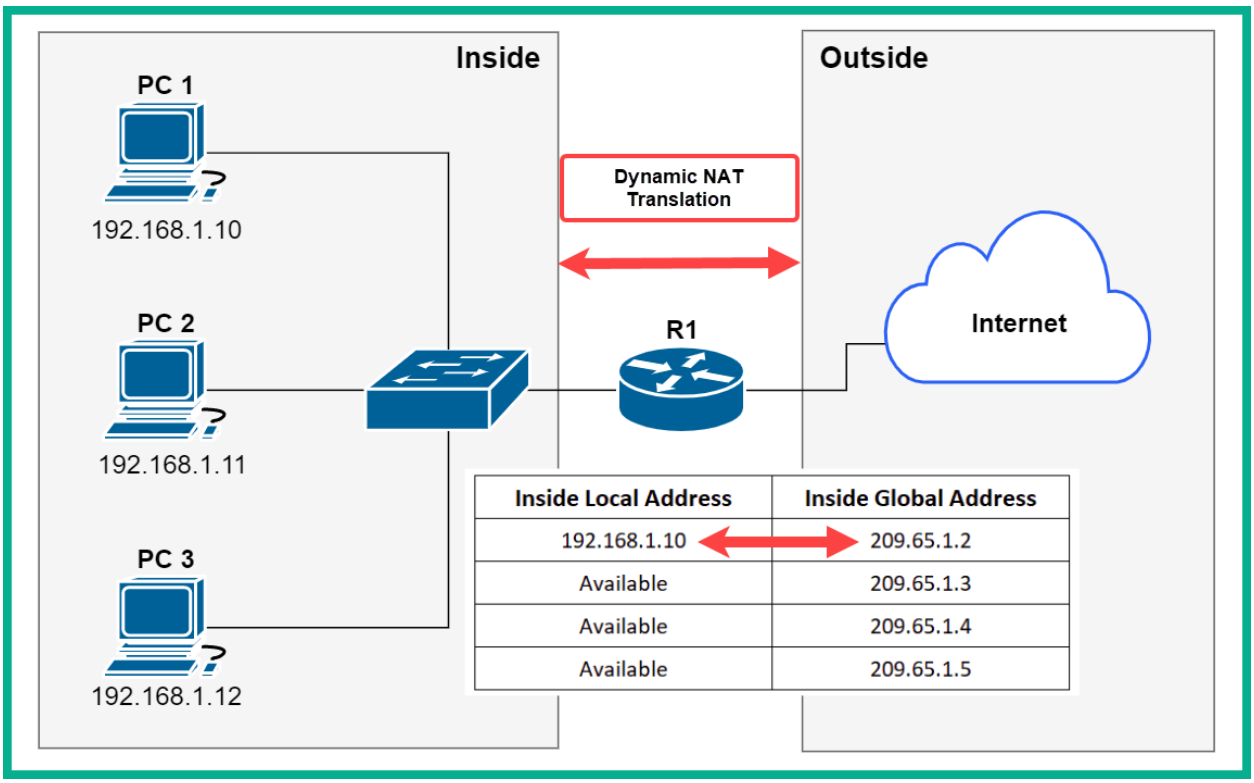
Inside
Outside
PC 1
192.168.1.10
PC 2
192.168.1.11
PC 3
192.168.1.12
Dynamic NAT Translation
R1
Internet
Inside Local Address
Inside Global Address
192.168.1.10
209.65.1.2
Available
209.65.1.3
Available
209.65.1.4
Available
209.65.1.5

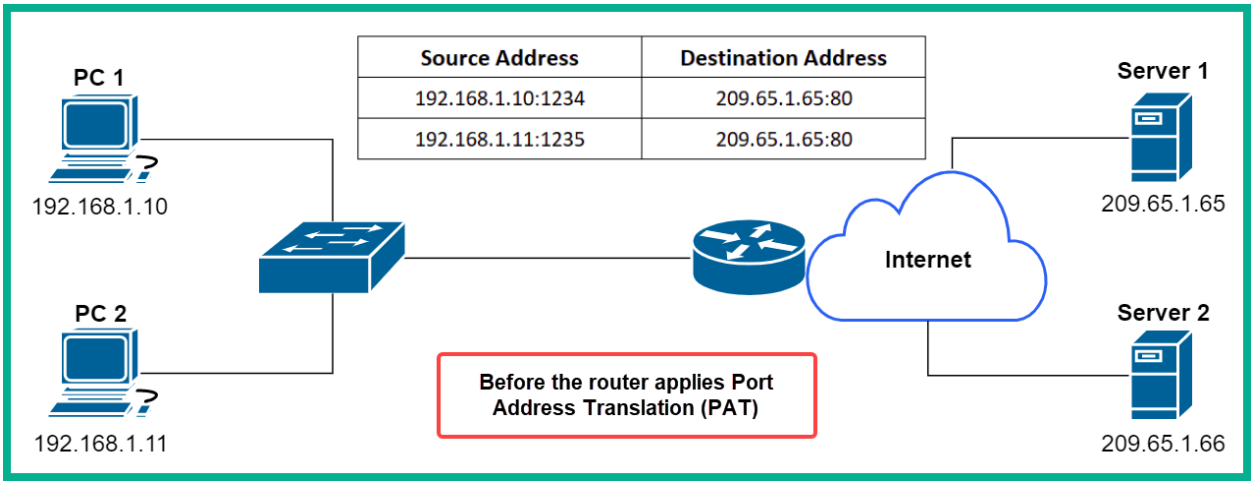
Source Address
Destination Address
192.168.1.10:1234
209.65.1.65:80
192.168.1.11:1235
209.65.1.65:80
PC 1
192.168.1.10
PC 2
192.168.1.11
Server 1
209.65.1.65
Server 2
209.65.1.66
Internet
Before the router applies Port Address Translation (PAT)

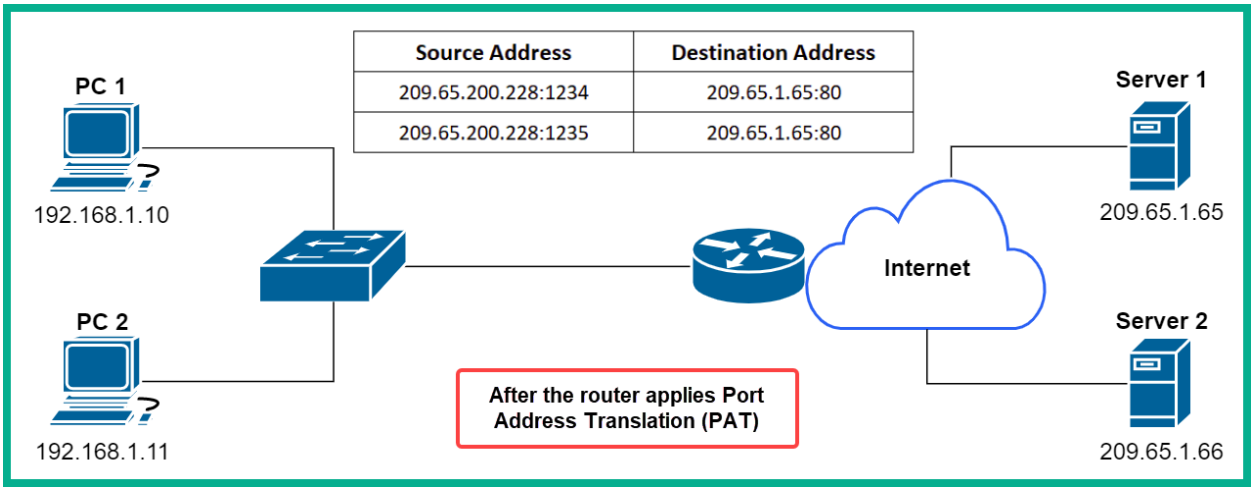

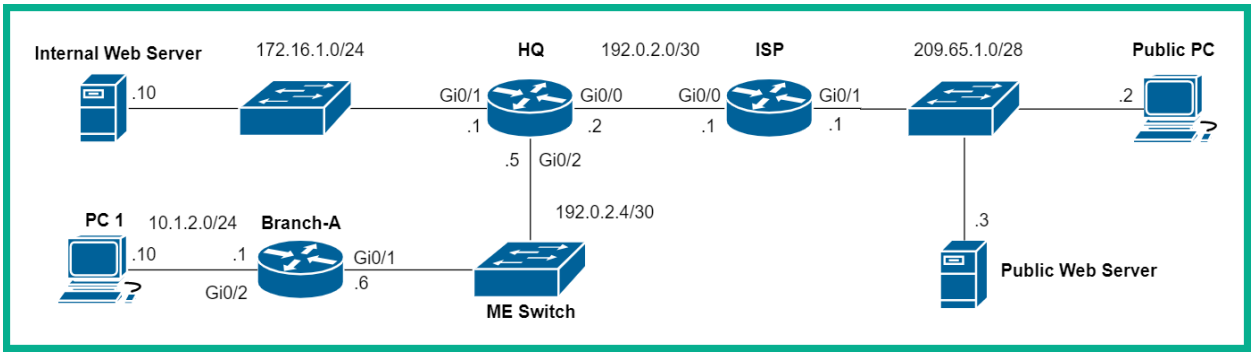

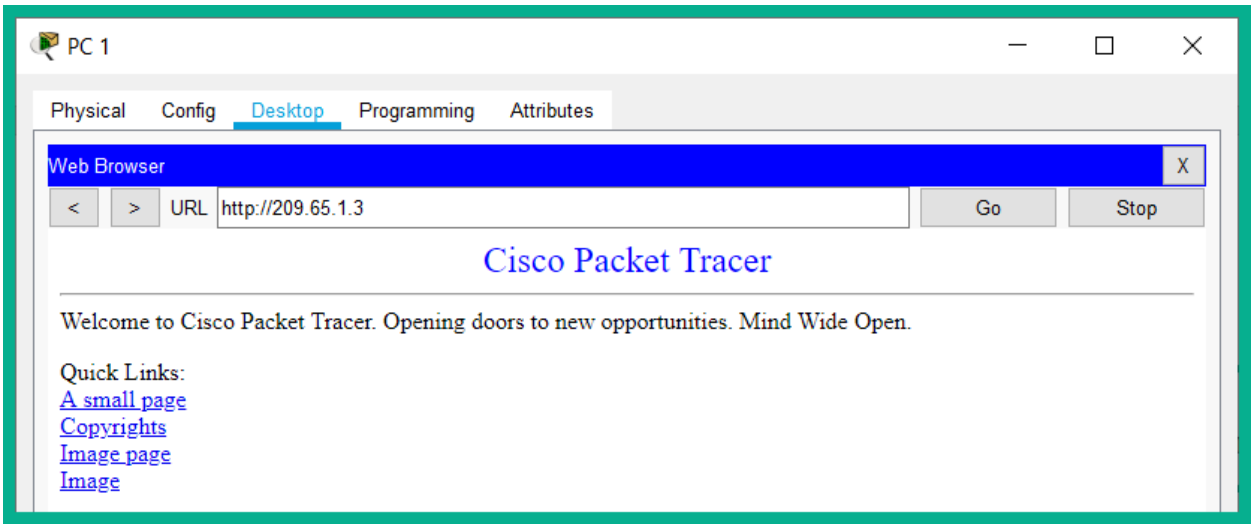


```
HQ#show ip nat translations
Pro  Inside global     Inside local       Outside local      Outside global
tcp 192.0.2.2:1025     10.1.2.10:1025     209.65.1.3:80      209.65.1.3:80
```

```
HQ#show ip nat statistics
Total translations: 1 (0 static, 1 dynamic, 1 extended)
Outside Interfaces: GigabitEthernet0/0
Inside Interfaces: GigabitEthernet0/1 , GigabitEthernet0/2
Hits: 9  Misses: 1
Expired translations: 0
Dynamic mappings:
```

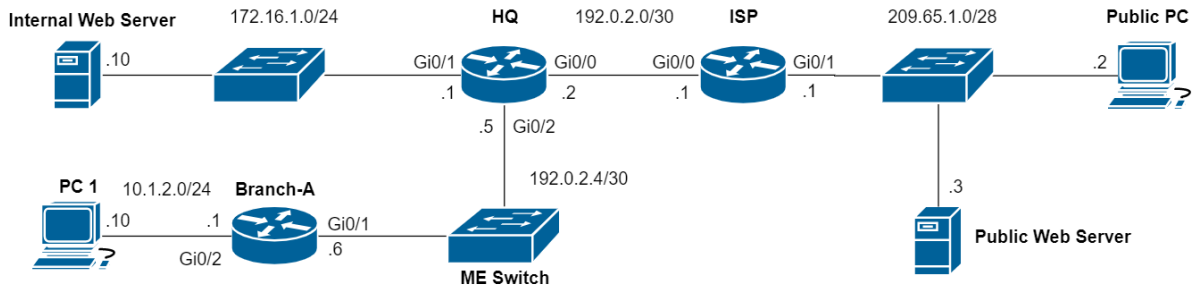


```
HQ#show ip nat translations
Pro  Inside global     Inside local       Outside local      Outside global
tcp 190.0.2.2:80       172.16.1.10:80     ---                ---
```

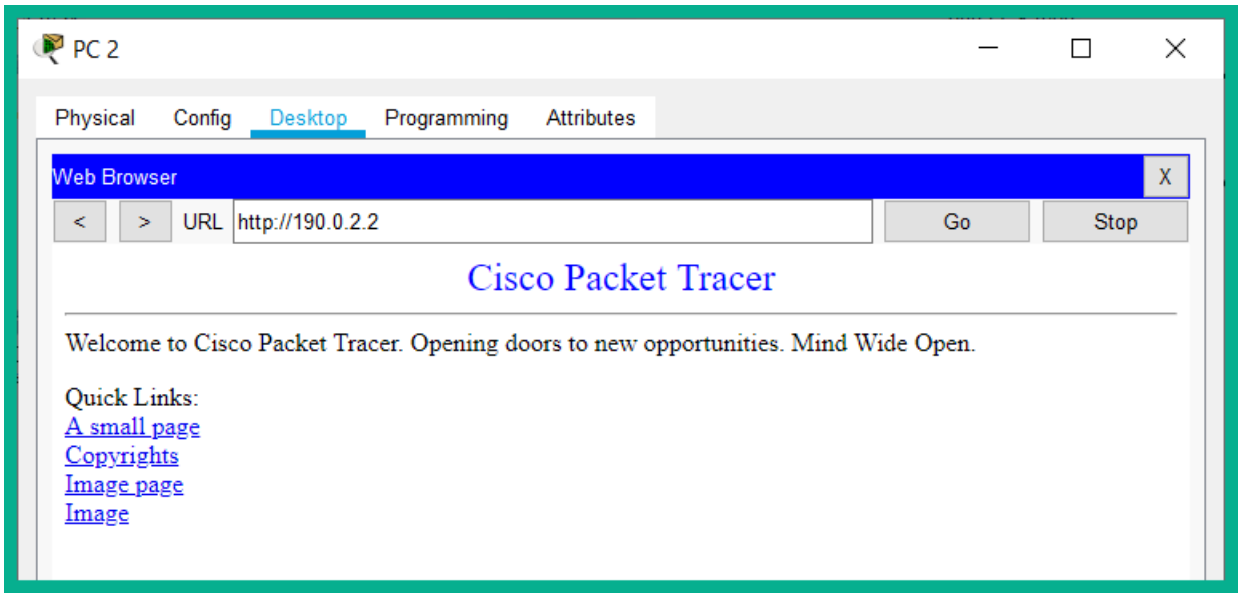


```
HQ#show ip nat translations
Pro  Inside global     Inside local       Outside local      Outside global
tcp 190.0.2.2:80       172.16.1.10:80     ---                ---
tcp 190.0.2.2:80       172.16.1.10:80     209.65.1.2:1029    209.65.1.2:1029
```

```
HQ#show ip nat statistics
Total translations: 2 (1 static, 1 dynamic, 2 extended)
Outside Interfaces: GigabitEthernet0/0
Inside Interfaces: GigabitEthernet0/1 , GigabitEthernet0/2
Hits: 57  Misses: 175
Expired translations: 10
Dynamic mappings:
HQ#
```

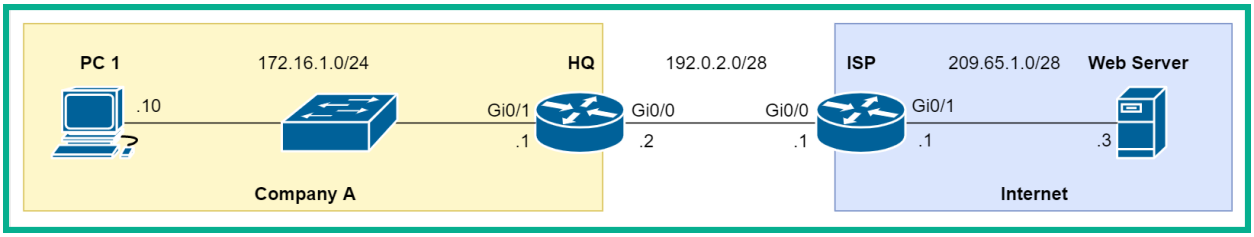

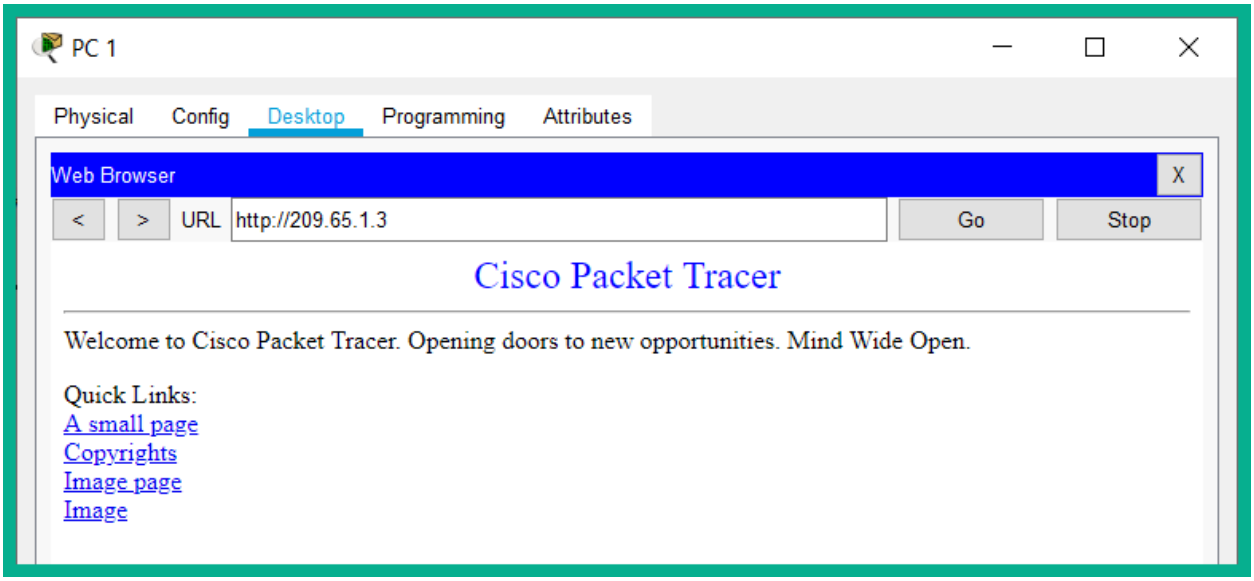


```
HQ#show ip nat translations
Pro  Inside global     Inside local       Outside local      Outside global
tcp 192.0.2.2:1026     172.16.1.10:1026   209.65.1.3:80      209.65.1.3:80
tcp 192.0.2.2:1027     172.16.1.10:1027   209.65.1.3:80      209.65.1.3:80
tcp 192.0.2.2:1028     172.16.1.10:1028   209.65.1.3:80      209.65.1.3:80
tcp 192.0.2.2:1029     172.16.1.10:1029   209.65.1.3:80      209.65.1.3:80
```

```
HQ#show ip nat statistics
Total translations: 4 (0 static, 4 dynamic, 4 extended)
Outside Interfaces: GigabitEthernet0/0
Inside Interfaces: GigabitEthernet0/1
Hits: 28  Misses: 4
Expired translations: 0
Dynamic mappings:
-- Inside Source
access-list NAT-List pool NAT-IPAdd refCount 4
 pool NAT-IPAdd: netmask 255.255.255.240
       start 192.0.2.2 end 192.0.2.5
       type generic, total addresses 4 , allocated 1 (25%), misses 0
```

Chapter 10: Implementing Network Services and IP Operations

```
R1#show clock
*15:03:22.694 UTC Tue Apr 28 2020
R1#
```

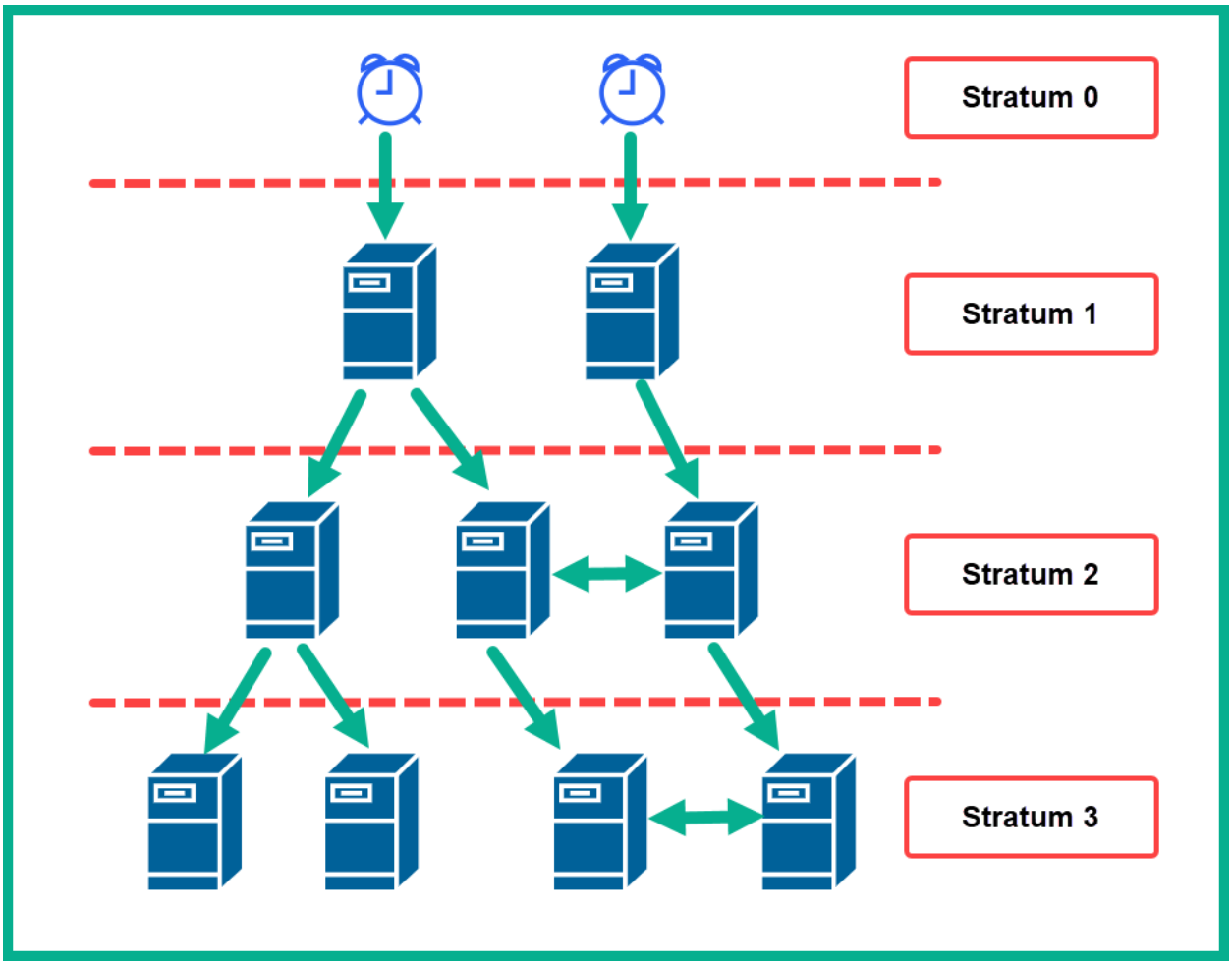

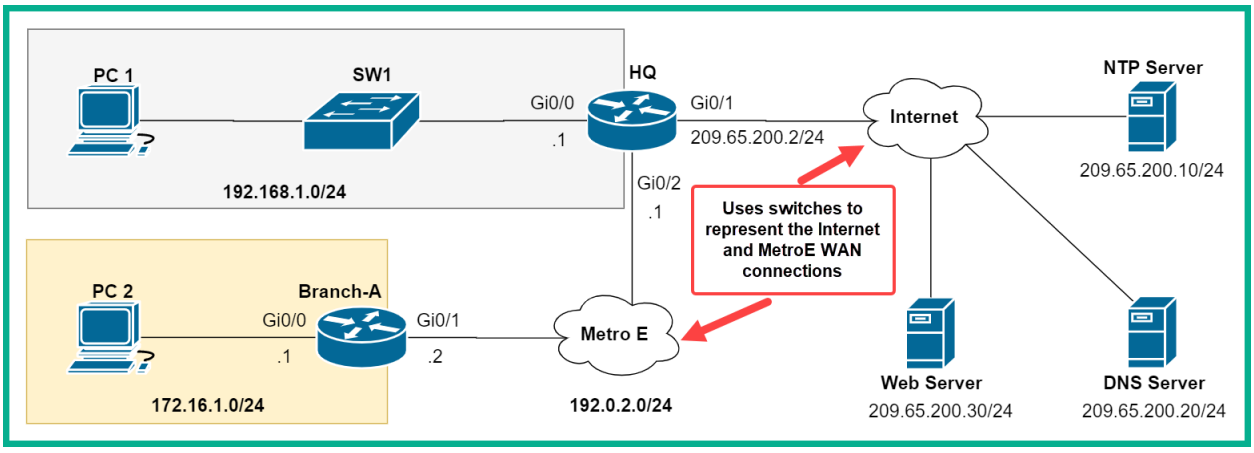

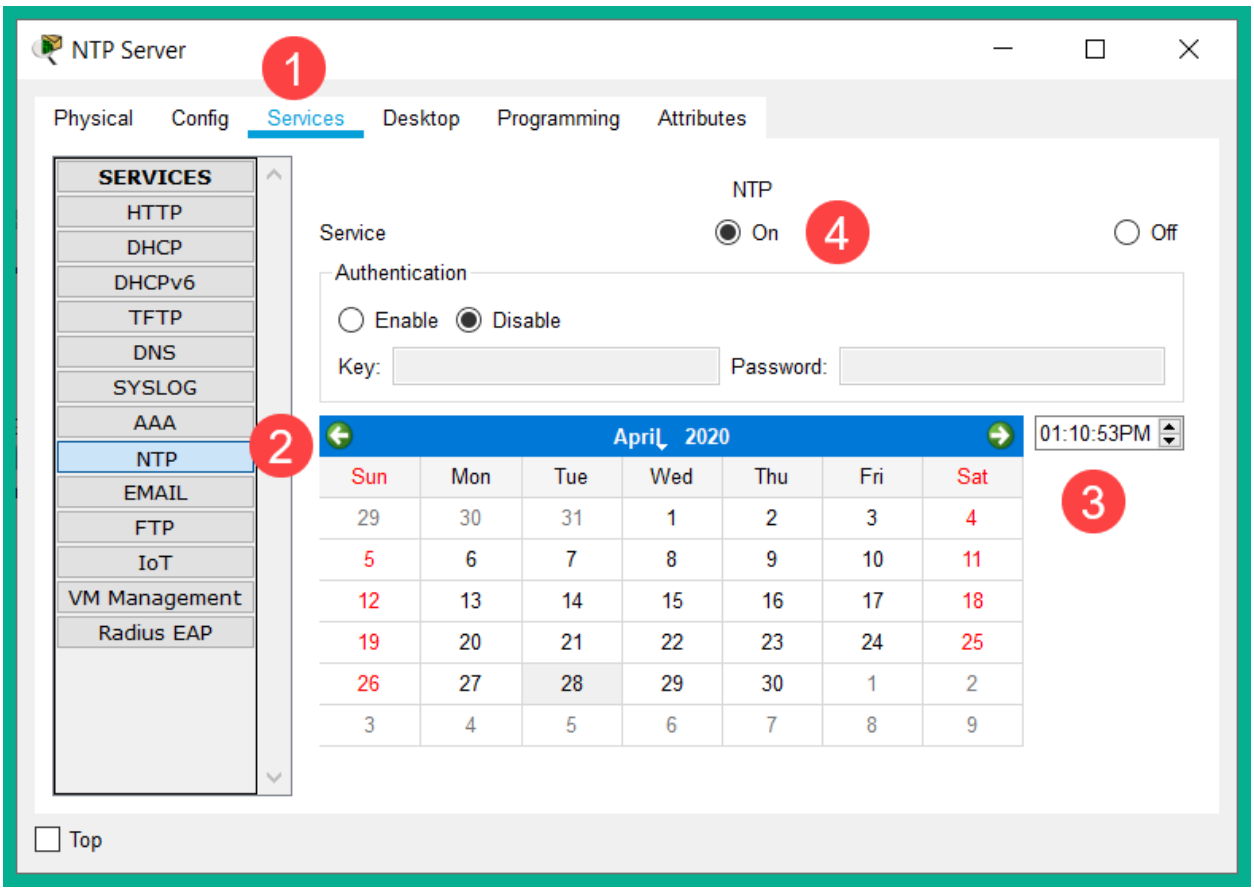


```
HQ#show ntp status
Clock is synchronized, stratum 2, reference is 209.65.200.10
nominal freq is 250.0000 Hz, actual freq is 249.9990 Hz, precision is 2**24
reference time is E22B2084.000003CA (13:26:28.970 UTC Tue Apr 28 2020)
clock offset is 0.00 msec, root delay is 0.00  msec
root dispersion is 10.89 msec, peer dispersion is 0.12 msec.
loopfilter state is 'CTRL' (Normal Controlled Loop), drift is - 0.000001193
s/s system poll interval is 4, last update was 13 sec ago.
HQ#
```

```
HQ#show ntp associations

address         ref clock       st   when     poll    reach  delay          offset
*~209.65.200.10 127.127.1.1     1    13       16      377    0.00           0.00
 * sys.peer, # selected, + candidate, - outlyer, x falseticker, ~ configured
HQ#
```

```
HQ#show clock
13:29:12.19 UTC Tue Apr 28 2020
HQ#
```

```
HQ#show ntp associations

address         ref clock       st   when     poll    reach  delay          offset
*~209.65.200.10 127.127.1.1     1    4        16      377    0.00           0.00
 ~127.127.1.1   .LOCL.          7    8        64      377    0.00           0.00
 * sys.peer, # selected, + candidate, - outlyer, x falseticker, ~ configured
HQ#
```

```
Branch-A#show ntp associations

address         ref clock       st   when     poll    reach  delay          offset
*~192.0.2.1     209.65.200.10   2    13       32      377    0.00           0.00
 * sys.peer, # selected, + candidate, - outlyer, x falseticker, ~ configured
Branch-A#
```

```
SW1#show ntp associations

address         ref clock       st   when     poll    reach  delay          offset
*~192.168.1.1   209.65.200.10   2    32       32      377    0.00           0.00
 * sys.peer, # selected, + candidate, - outlyer, x falseticker, ~ configured
SW1#
```

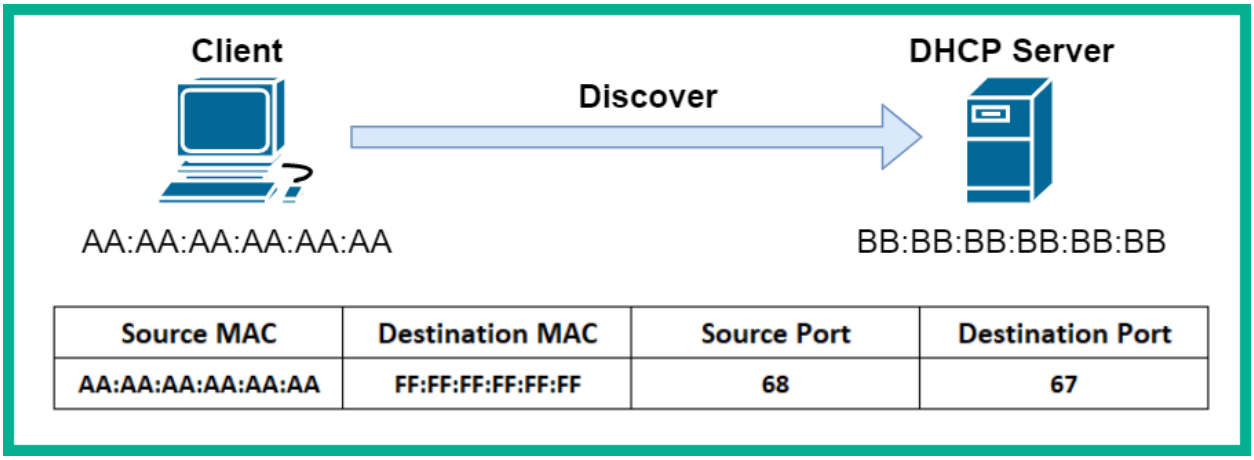

Source MAC	Destination MAC	Source Port	Destination Port
AA:AA:AA:AA:AA:AA	FF:FF:FF:FF:FF:FF	68	67

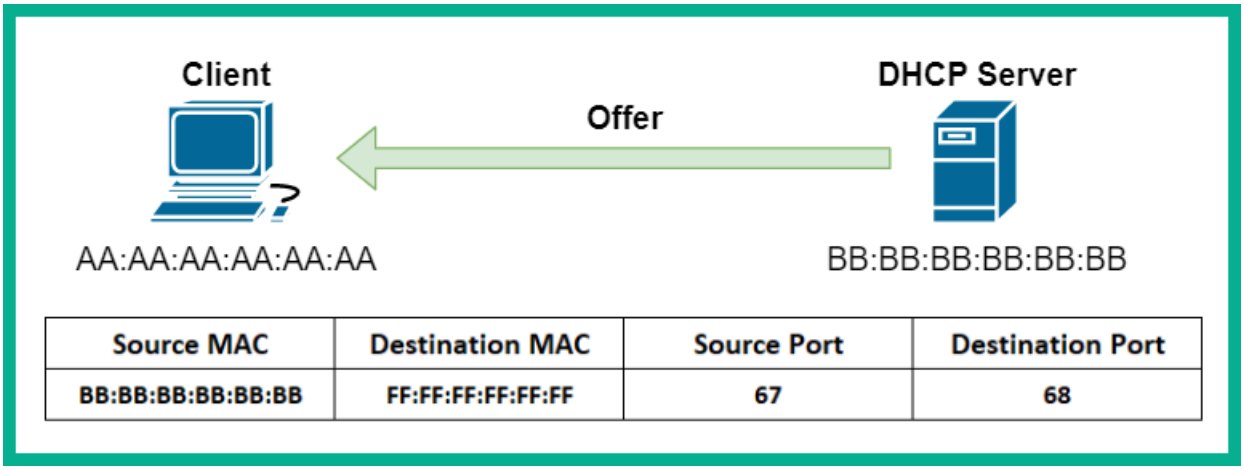

Source MAC	Destination MAC	Source Port	Destination Port
BB:BB:BB:BB:BB:BB	FF:FF:FF:FF:FF:FF	67	68

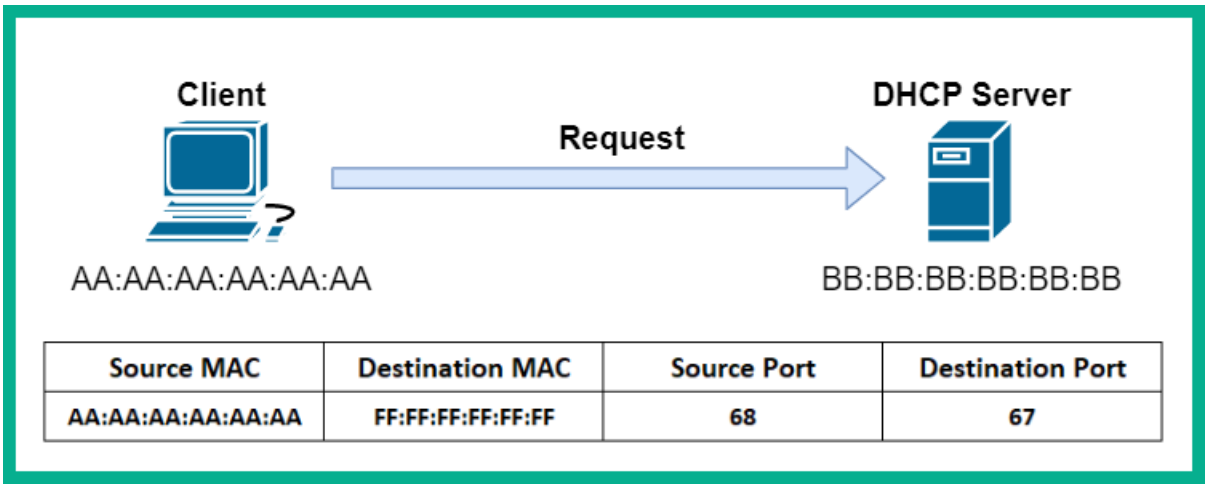

Source MAC	Destination MAC	Source Port	Destination Port
AA:AA:AA:AA:AA:AA	FF:FF:FF:FF:FF:FF	68	67

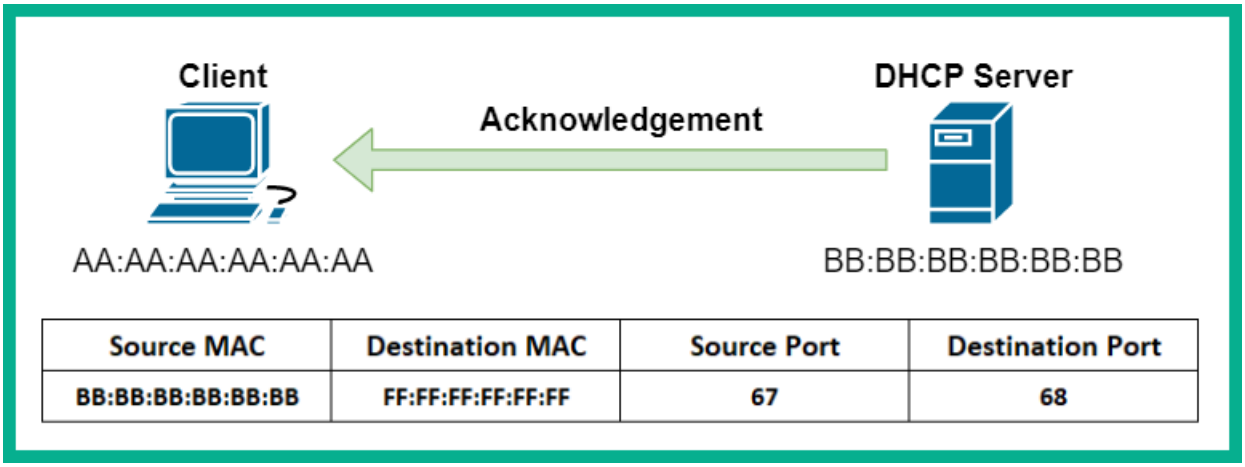

Source MAC	Destination MAC	Source Port	Destination Port
BB:BB:BB:BB:BB:BB	FF:FF:FF:FF:FF:FF	67	68

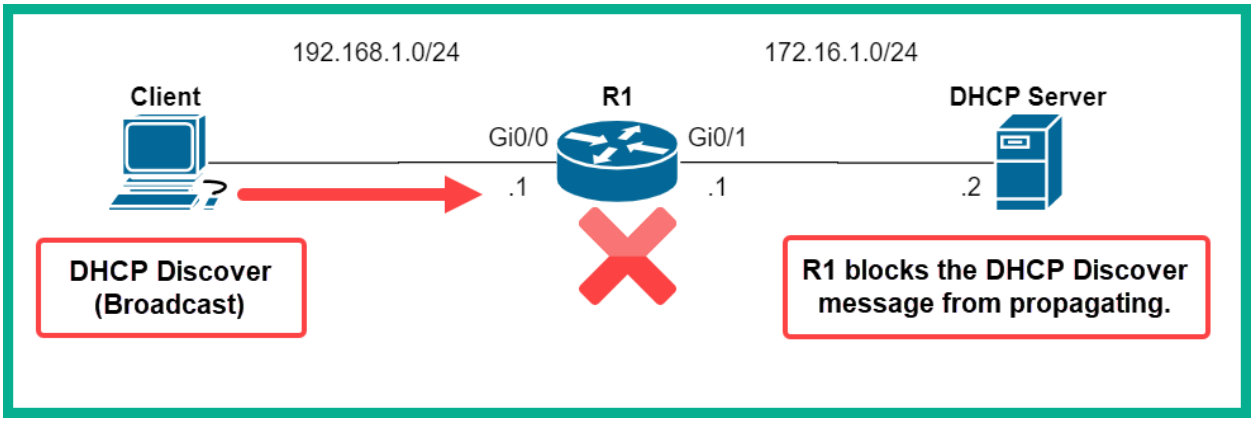

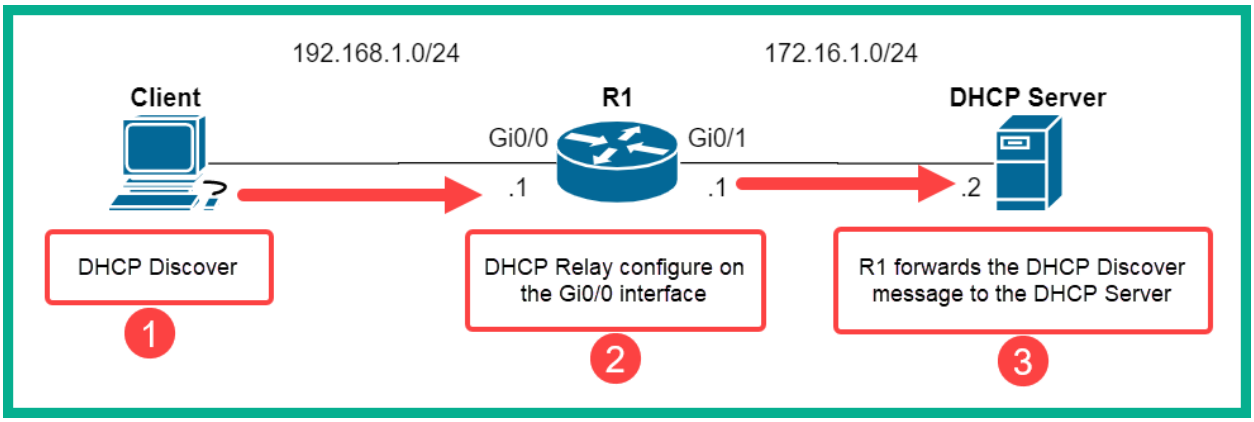

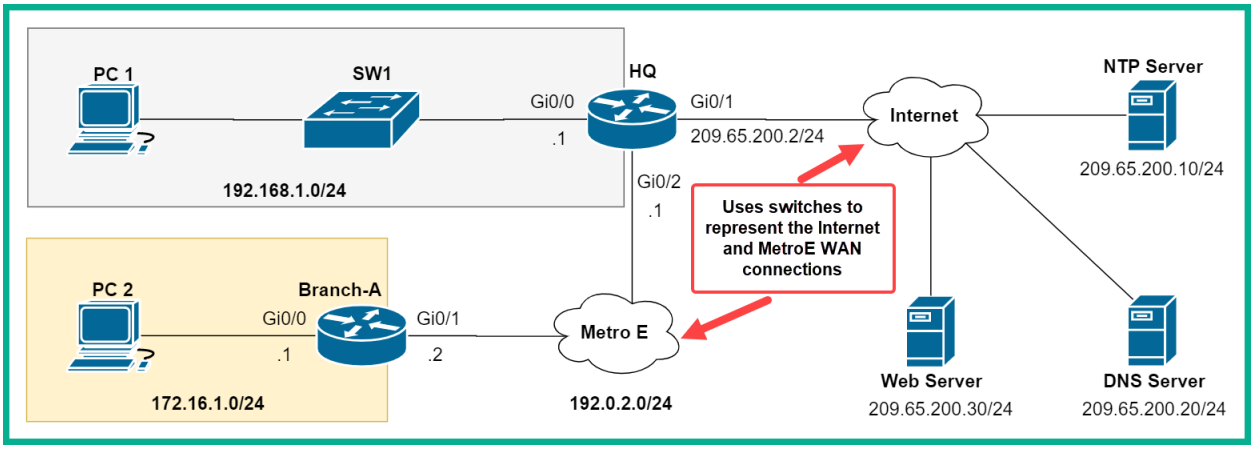


```
Branch-A#show ip interface gigabitEthernet 0/0
GigabitEthernet0/0 is up, line protocol is up (connected)
  Internet address is 172.16.1.1/24
  Broadcast address is 255.255.255.255
  Address determined by setup command
  MTU is 1500 bytes
  Helper address is 192.0.2.1
  Directed broadcast forwarding is disabled
```

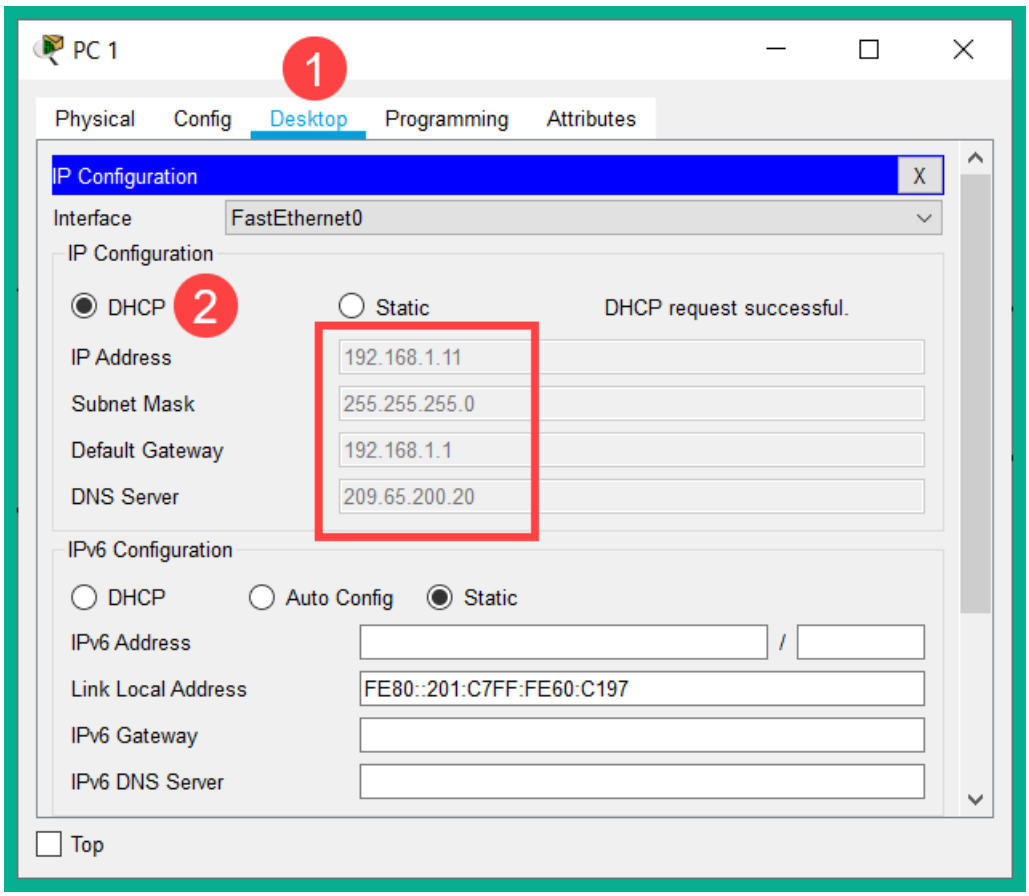


```
HQ#show ip dhcp binding
IP address       Client-ID/              Lease expiration        Type
                 Hardware address
192.168.1.11     0001.C760.C197           --                     Automatic
172.16.1.11      00E0.B0E8.1A13           --                     Automatic
HQ#
```

```
HQ#show ip dhcp pool

Pool HQ-LAN :
 Utilization mark (high/low)    : 100 / 0
 Subnet size (first/next)       : 0 / 0
 Total addresses                : 254
 Leased addresses               : 1
 Excluded addresses             : 2
 Pending event                  : none

 1 subnet is currently in the pool
 Current index        IP address range                    Leased/Excluded/Total
 192.168.1.1          192.168.1.1      - 192.168.1.254     1    / 2     / 254
```

hosts - Notepad

File Edit Format View Help

```
# Copyright (c) 1993-2009 Microsoft Corp.
#
# This is a sample HOSTS file used by Microsoft TCP/IP for Windows.
#
# This file contains the mappings of IP addresses to host names. Each
# entry should be kept on an individual line. The IP address should
# be placed in the first column followed by the corresponding host name.
# The IP address and the host name should be separated by at least one
# space.
#
# Additionally, comments (such as these) may be inserted on individual
# lines or following the machine name denoted by a '#' symbol.
#
# For example:
#
#      102.54.94.97     rhino.acme.com          # source server
#       38.25.63.10     x.acme.com              # x client host

# localhost name resolution is handled within DNS itself.
#       127.0.0.1       localhost
#       ::1             localhost
```

Ln 1, Col 1 | 100% | Windows (CRLF) | UTF-8

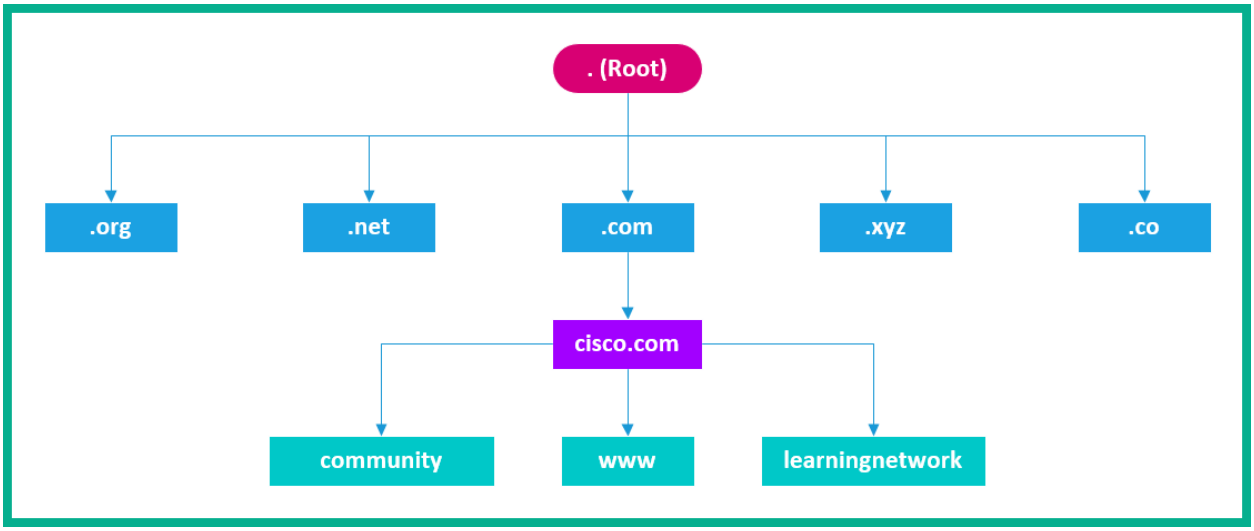

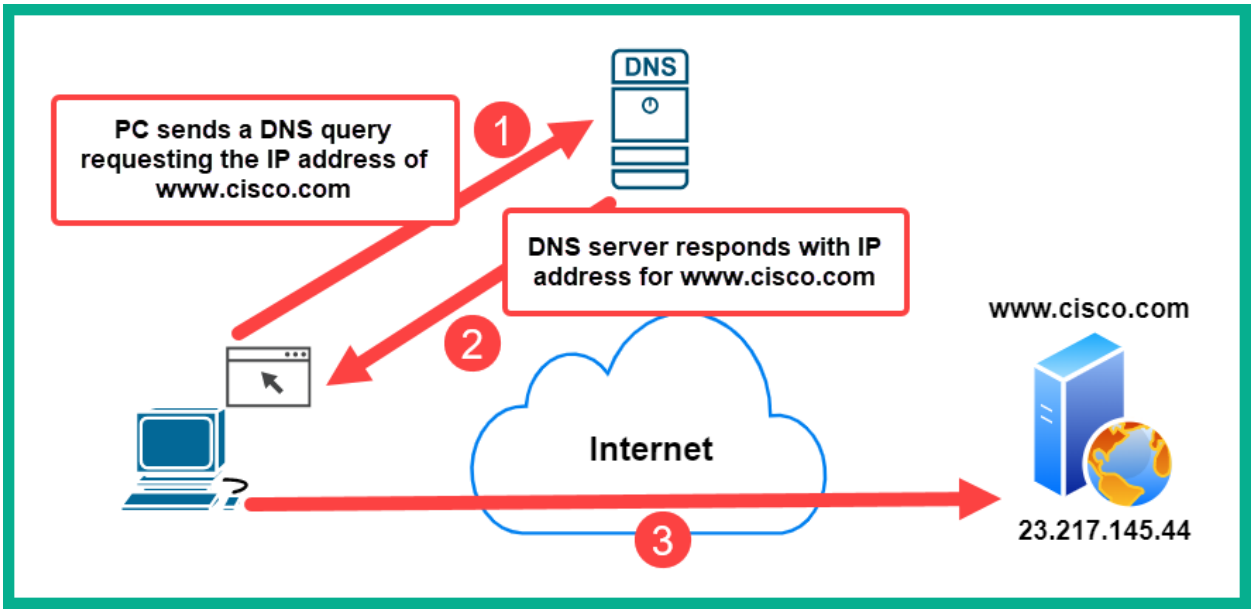
DNS
PC sends a DNS query requesting the IP address of www.cisco.com
1
DNS server responds with IP address for www.cisco.com
2
Internet
3
www.cisco.com
23.217.145.44

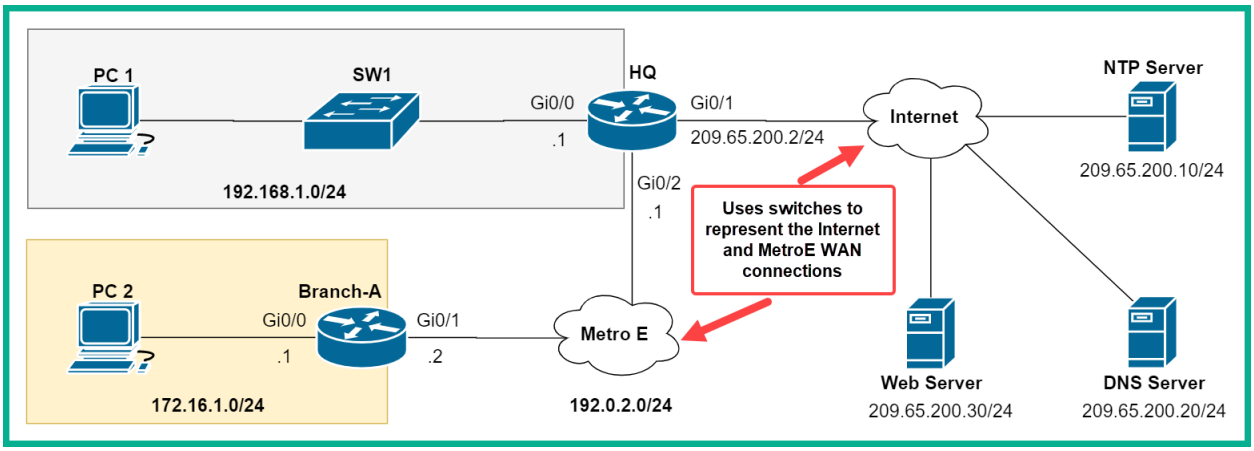
PC 1
SW1
HQ
Gi0/0
.1
Gi0/1
209.65.200.2/24
Internet
NTP Server
209.65.200.10/24
192.168.1.0/24
Gi0/2
.1
Uses switches to represent the Internet and MetroE WAN connections
PC 2
Branch-A
Gi0/0
.1
Gi0/1
.2
Metro E
192.0.2.0/24
172.16.1.0/24
Web Server
209.65.200.30/24
DNS Server
209.65.200.20/24

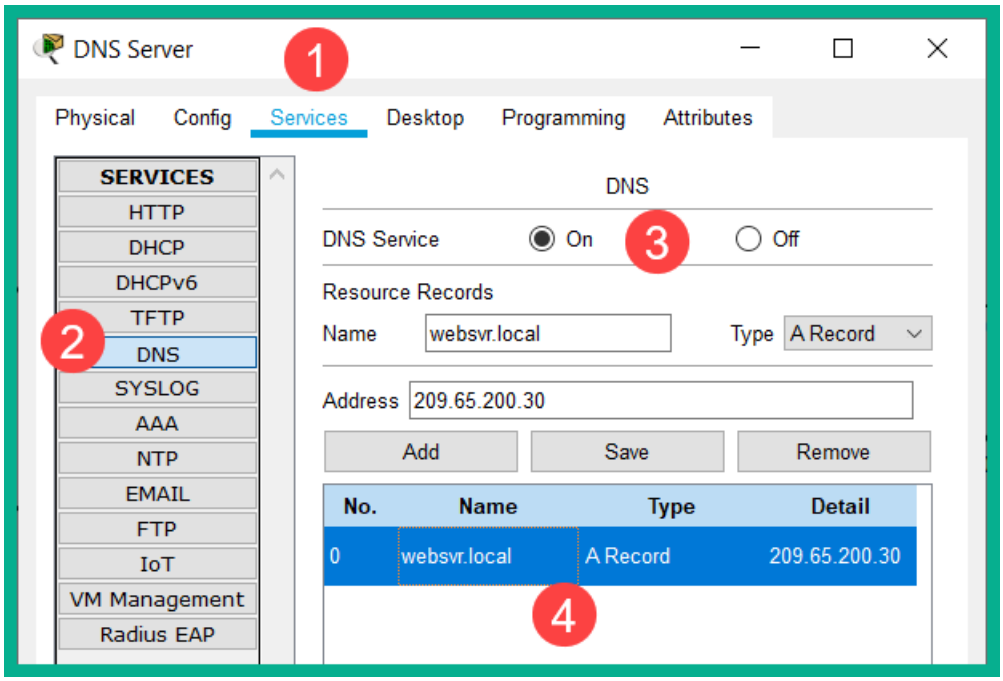
DNS Server
1
Physical
Config
Services
Desktop
Programming
Attributes
SERVICES
HTTP
DHCP
DHCPv6
TFTP
2
DNS
SYSLOG
AAA
NTP
EMAIL
FTP
IoT
VM Management
Radius EAP
DNS
DNS Service
On
3
Off
Resource Records
Name
websvr.local
Type
A Record
Address
209.65.200.30
Add
Save
Remove
No.
Name
Type
Detail
0
websvr.local
A Record
209.65.200.30
4

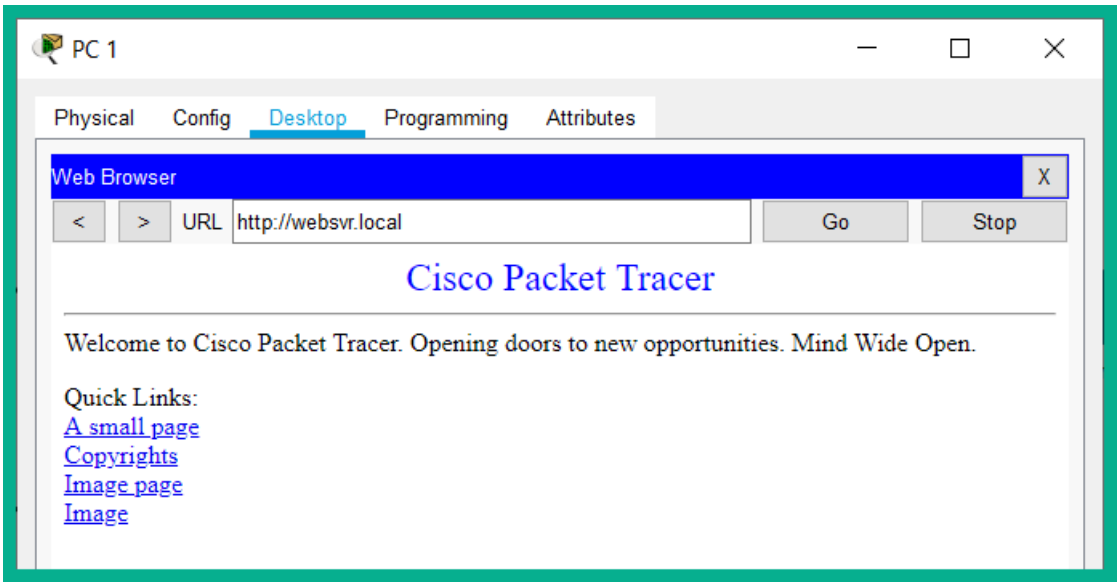
PC 1
Physical
Config
Desktop
Programming
Attributes
Web Browser
X
<
>
URL
http://websvr.local
Go
Stop
Cisco Packet Tracer
Welcome to Cisco Packet Tracer. Opening doors to new opportunities. Mind Wide Open.
Quick Links:
A small page
Copyrights
Image page
Image

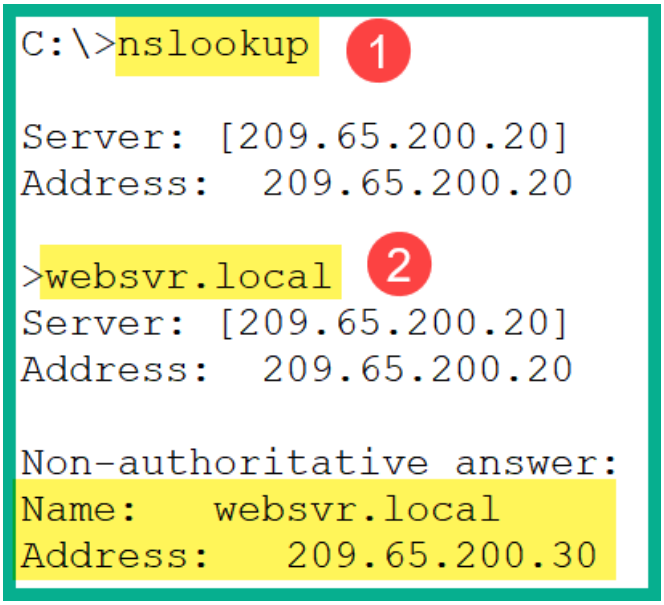

Severity Name	Severity Level	Description
Emergency	0	System is unusable
Alert	1	Immediate action is needed
Critical	2	Critical condition
Error	3	Error condition
Warning	4	Warning condition
Notification	5	Normal but significant condition
Informational	6	Informational message
Debugging	7	Debugging message

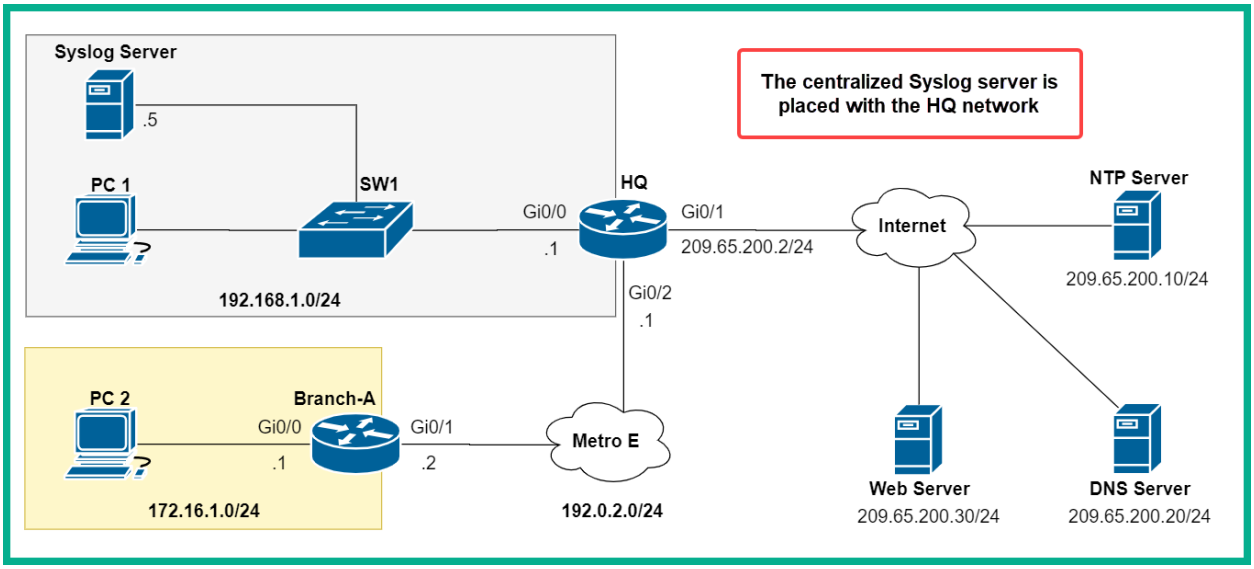
Syslog Server
.5
PC 1
SW1
Gi0/0
.1
HQ
Gi0/1
209.65.200.2/24
Internet
NTP Server
209.65.200.10/24
192.168.1.0/24
The centralized Syslog server is placed with the HQ network
Gi0/2
.1
PC 2
Branch-A
Gi0/0
.1
Gi0/1
.2
Metro E
172.16.1.0/24
192.0.2.0/24
Web Server
209.65.200.30/24
DNS Server
209.65.200.20/24

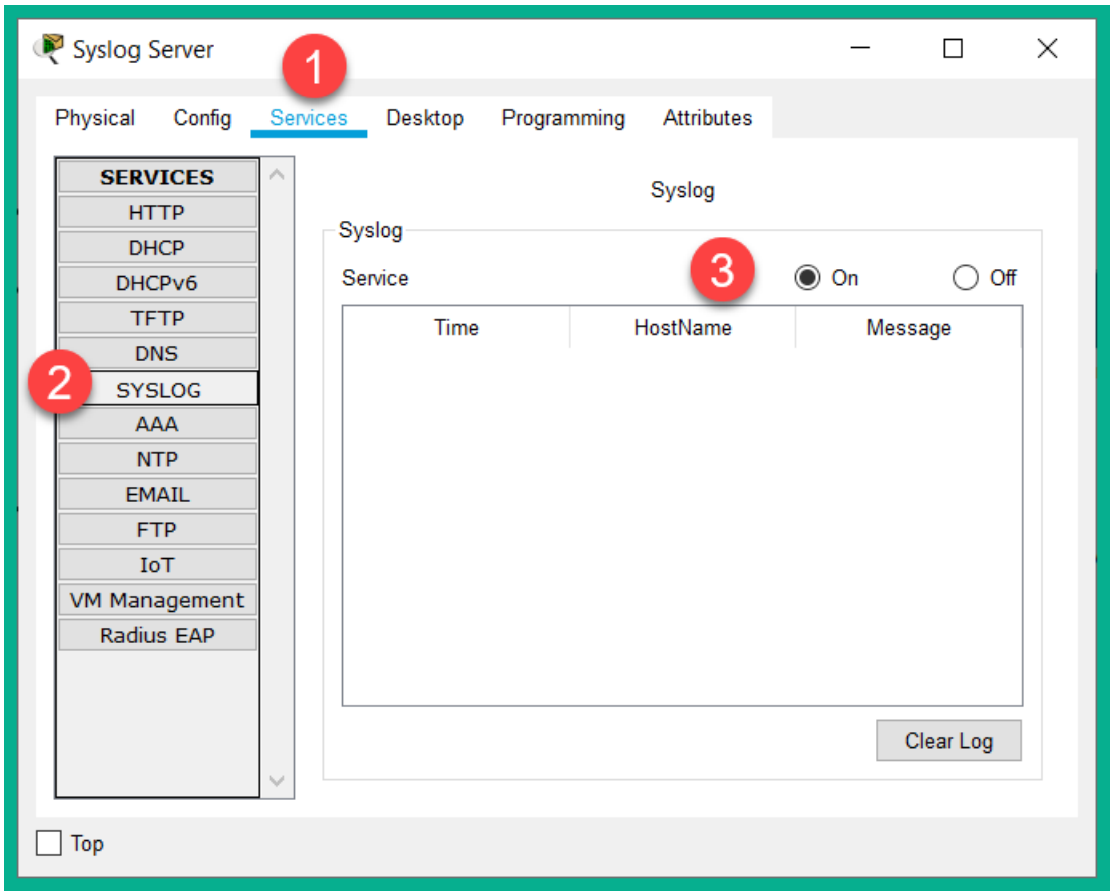
Syslog Server
1
Physical
Config
Services
Desktop
Programming
Attributes
SERVICES
HTTP
DHCP
DHCPv6
TFTP
DNS
2
SYSLOG
AAA
NTP
EMAIL
FTP
IoT
VM Management
Radius EAP
Syslog
Syslog
Service
3
On
Off
Time
HostName
Message
Clear Log
Top

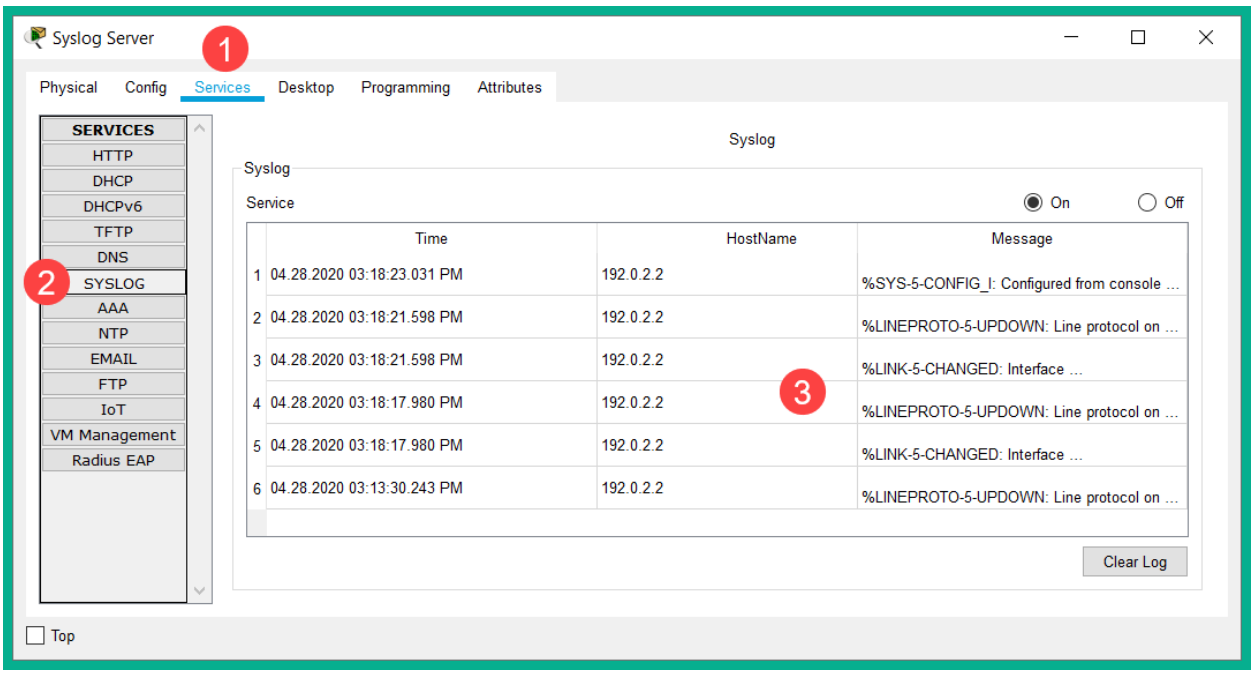


```
Branch-A#show logging
Syslog logging: enabled (0 messages dropped, 0 messages rate-limited,
          0 flushes, 0 overruns, xml disabled, filtering disabled)

No Active Message Discriminator.


No Inactive Message Discriminator.


    Console logging: level debugging, 10 messages logged, xml disabled,
          filtering disabled
    Monitor logging: level debugging, 10 messages logged, xml disabled,
          filtering disabled
    Buffer logging:  disabled, xml disabled,
          filtering disabled
```

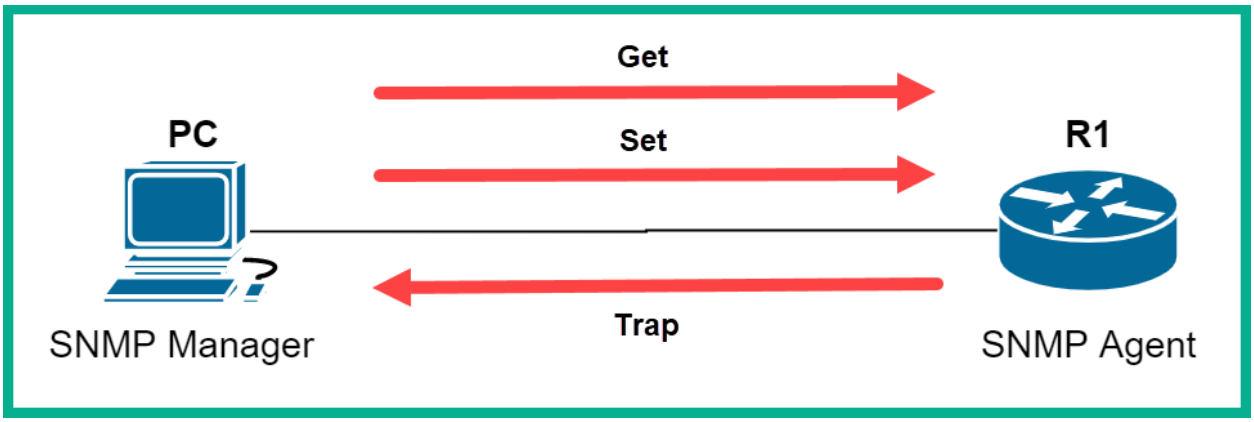

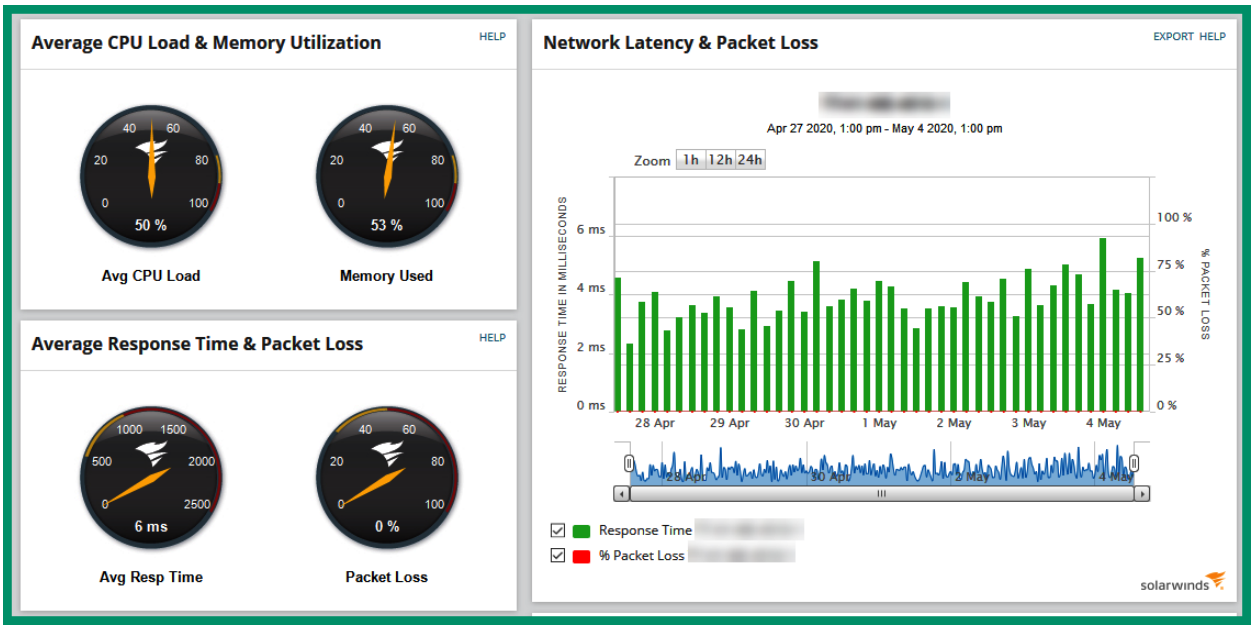
Average CPU Load & Memory Utilization
HELP
50 %
Avg CPU Load
53 %
Memory Used
Average Response Time & Packet Loss
HELP
6 ms
Avg Resp Time
0 %
Packet Loss
Network Latency & Packet Loss
EXPORT HELP
Apr 27 2020, 1:00 pm - May 4 2020, 1:00 pm
Zoom 1h 12h 24h
RESPONSE TIME IN MILLISECONDS
6 ms
4 ms
2 ms
0 ms
100 %
75 %
50 %
25 %
0 %
% PACKET LOSS
28 Apr
29 Apr
30 Apr
1 May
2 May
3 May
4 May
Response Time
% Packet Loss
solarwinds

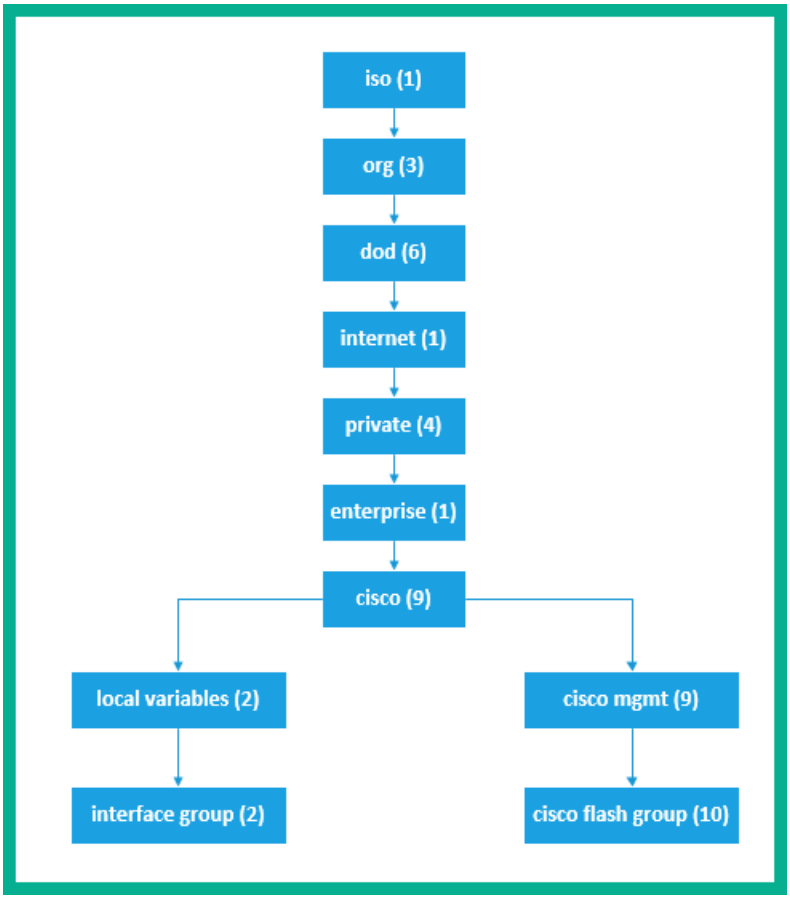
iso (1)
org (3)
dod (6)
internet (1)
private (4)
enterprise (1)
cisco (9)
local variables (2)
interface group (2)
cisco mgmt (9)
cisco flash group (10)

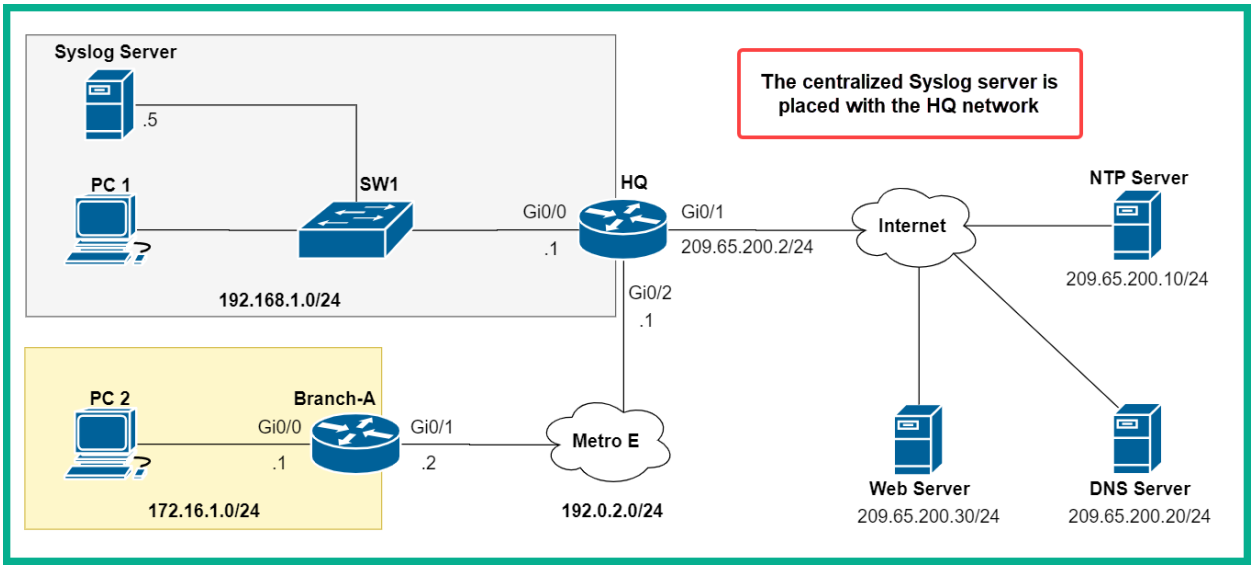
Syslog Server
.5
PC 1
SW1
HQ
Gi0/0
.1
Gi0/1
209.65.200.2/24
Internet
NTP Server
209.65.200.10/24
192.168.1.0/24
The centralized Syslog server is placed with the HQ network
Gi0/2
.1
PC 2
Branch-A
Gi0/0
.1
Gi0/1
.2
Metro E
172.16.1.0/24
192.0.2.0/24
Web Server
209.65.200.30/24
DNS Server
209.65.200.20/24

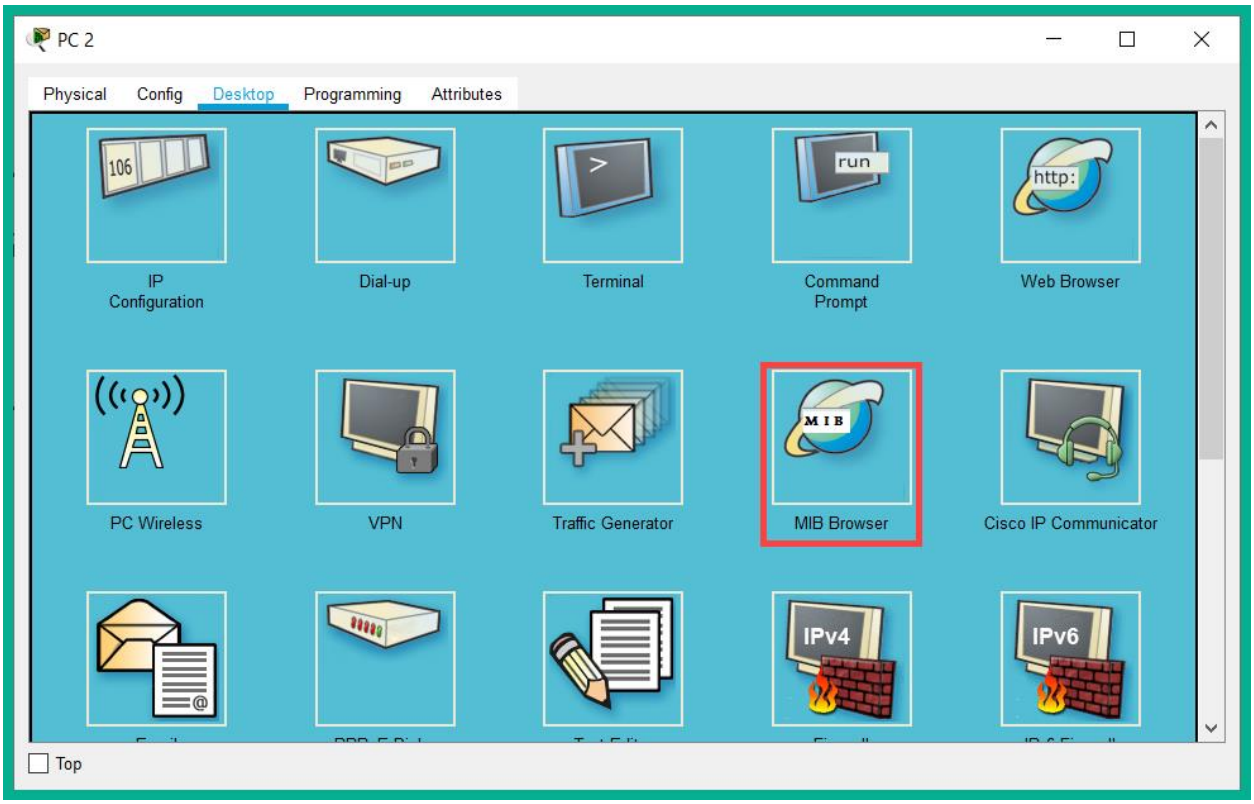
PC 2
Physical
Config
Desktop
Programming
Attributes
IP Configuration
Dial-up
Terminal
Command Prompt
Web Browser
PC Wireless
VPN
Traffic Generator
MIB Browser
Cisco IP Communicator
IPv4
IPv6
Top

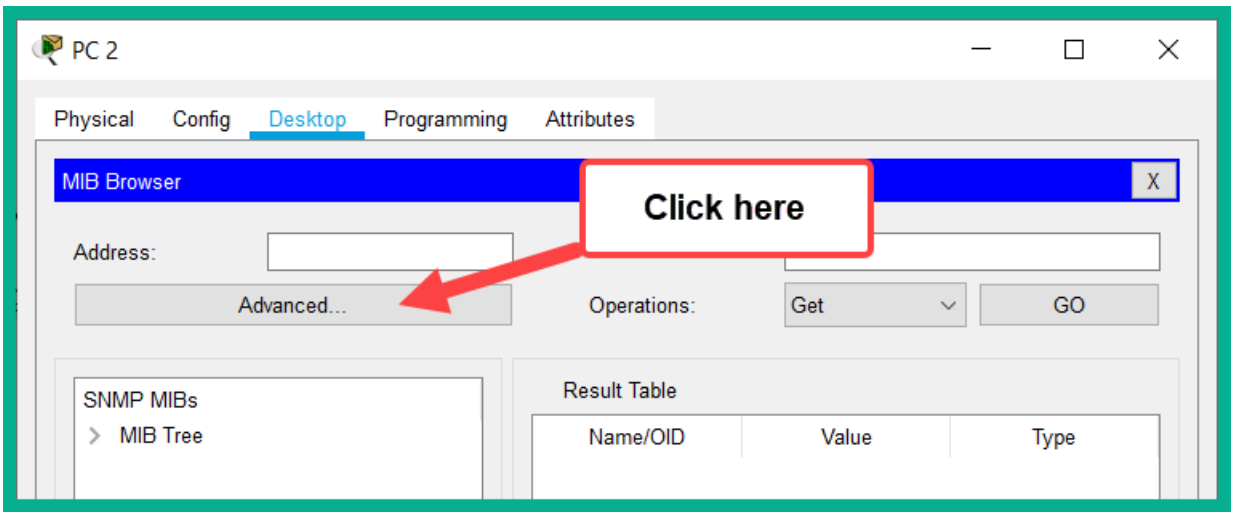
PC 2
Physical
Config
Desktop
Programming
Attributes
MIB Browser
X
Click here
Address:
Advanced...
Operations:
Get
GO
SNMP MIBs
MIB Tree
Result Table
Name/OID
Value
Type

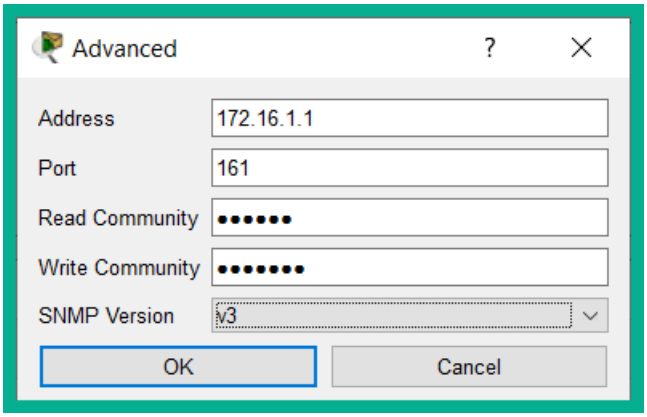
Advanced
?
Address
172.16.1.1
Port
161
Read Community
Write Community
SNMP Version
v3
OK
Cancel

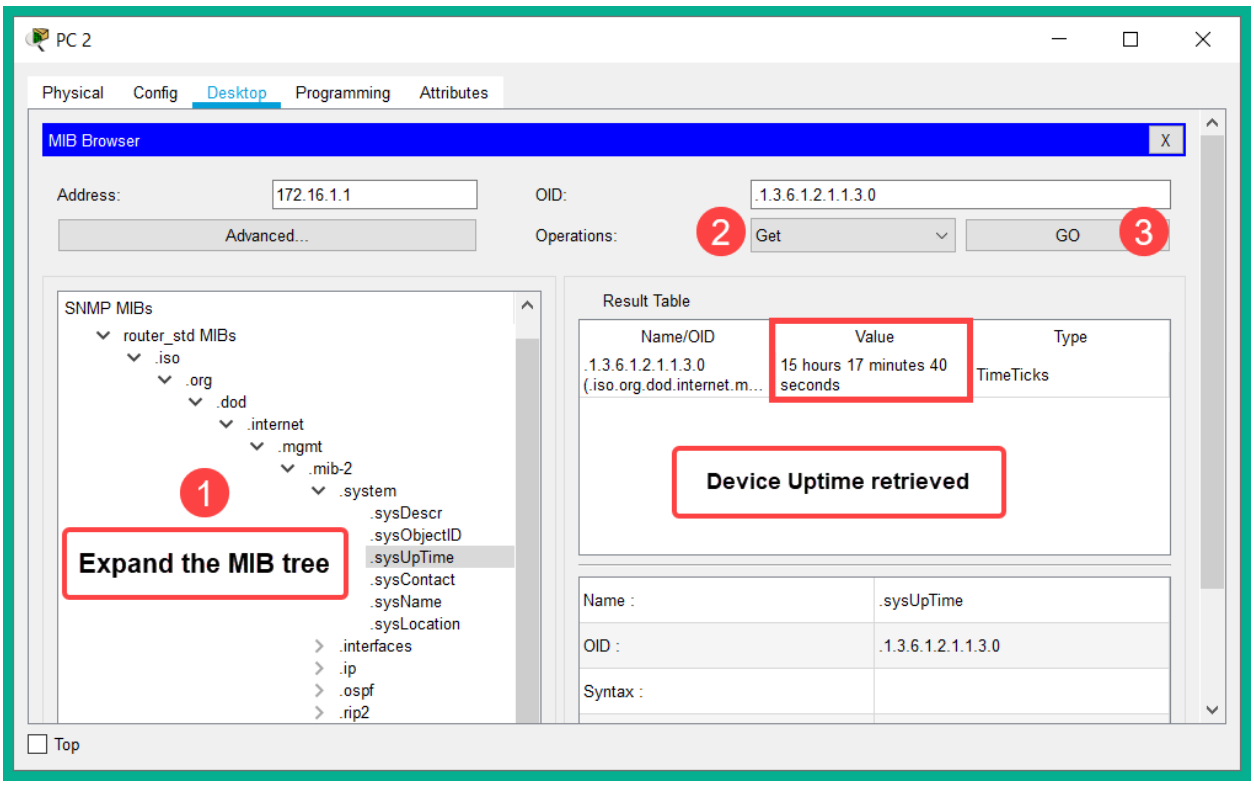
PC 2
Physical
Config
Desktop
Programming
Attributes
MIB Browser
X
Address:
172.16.1.1
OID:
.1.3.6.1.2.1.1.3.0
Advanced...
Operations:
2
Get
GO
3
SNMP MIBs
router_std MIBs
.iso
.org
.dod
.internet
.mgmt
.mib-2
.system
1
Expand the MIB tree
.sysDescr
.sysObjectID
.sysUpTime
.sysContact
.sysName
.sysLocation
.interfaces
.ip
.ospf
.rip2
Result Table
Name/OID
Value
Type
.1.3.6.1.2.1.1.3.0
(.iso.org.dod.internet.m...
15 hours 17 minutes 40 seconds
TimeTicks
Device Uptime retrieved
Name :
.sysUpTime
OID :
.1.3.6.1.2.1.1.3.0
Syntax :
Top

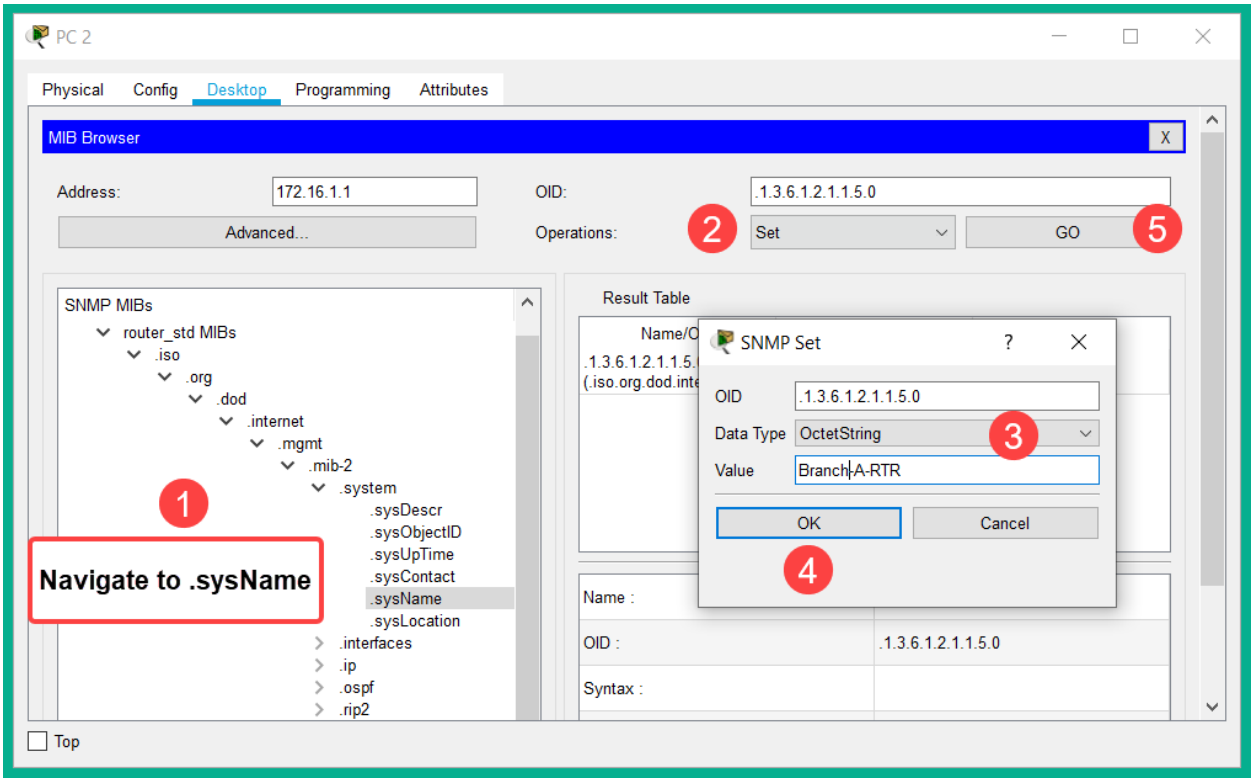
PC 2
Physical
Config
Desktop
Programming
Attributes
MIB Browser
X
Address:
172.16.1.1
OID:
.1.3.6.1.2.1.1.5.0
Advanced...
Operations:
2
Set
GO
5
SNMP MIBs
router_std MIBs
.iso
.org
.dod
.internet
.mgmt
.mib-2
.system
1
Navigate to .sysName
.sysDescr
.sysObjectID
.sysUpTime
.sysContact
.sysName
.sysLocation
.interfaces
.ip
.ospf
.rip2
Result Table
SNMP Set
?
OID
.1.3.6.1.2.1.1.5.0
Data Type
OctetString
3
Value
Branch-A-RTR
OK
Cancel
4
Name :
OID :
.1.3.6.1.2.1.1.5.0
Syntax :
Top

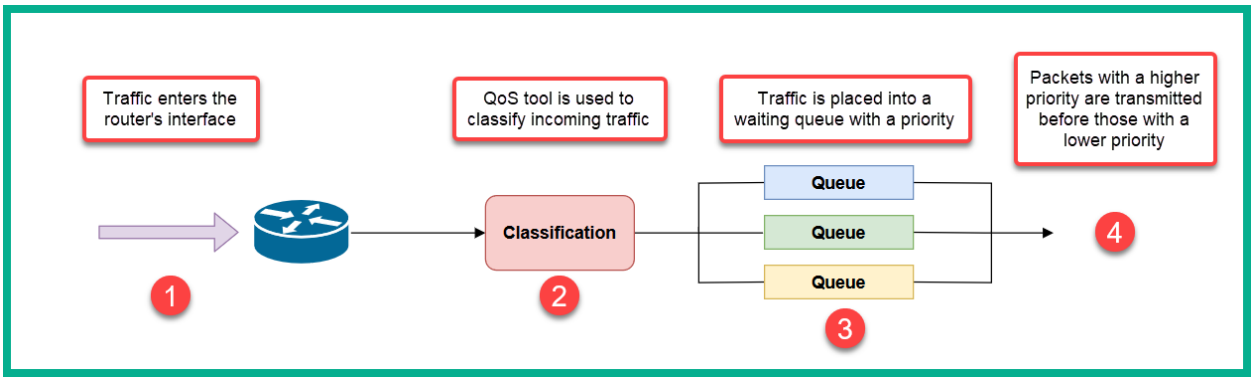
Traffic enters the router's interface
QoS tool is used to classify incoming traffic
Traffic is placed into a waiting queue with a priority
Packets with a higher priority are transmitted before those with a lower priority
Classification
Queue
Queue
Queue
1
2
3
4

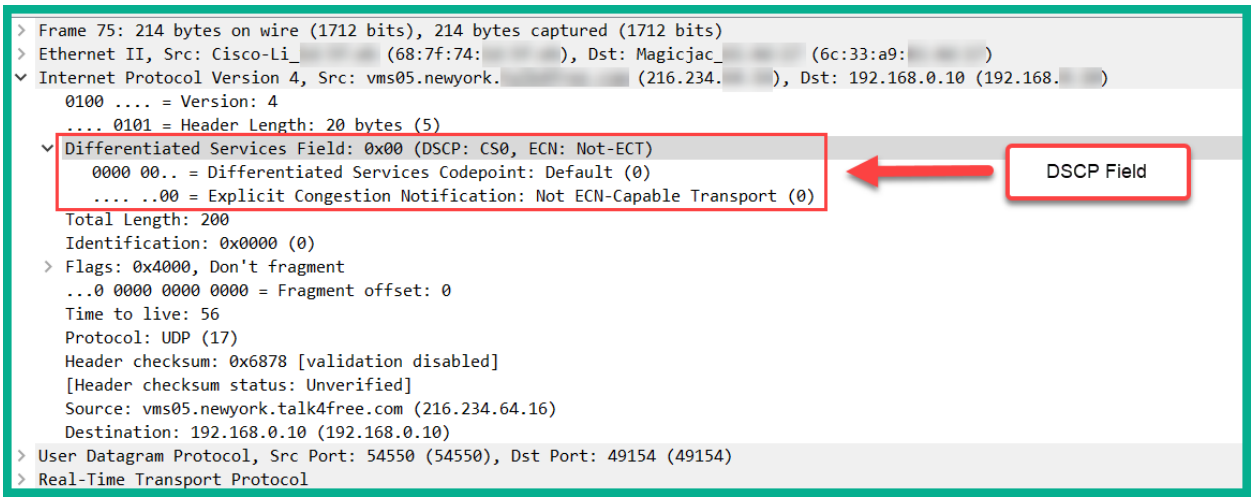
Frame 75: 214 bytes on wire (1712 bits), 214 bytes captured (1712 bits)
Ethernet II, Src: Cisco-Li_ (68:7f:74:), Dst: Magicjac_ (6c:33:a9:)
Internet Protocol Version 4, Src: vms05.newyork. (216.234.), Dst: 192.168.0.10 (192.168.)
0100 .... = Version: 4
.... 0101 = Header Length: 20 bytes (5)
Differentiated Services Field: 0x00 (DSCP: CS0, ECN: Not-ECT)
0000 00.. = Differentiated Services Codepoint: Default (0)
.... ..00 = Explicit Congestion Notification: Not ECN-Capable Transport (0)
Total Length: 200
Identification: 0x0000 (0)
Flags: 0x4000, Don't fragment
...0 0000 0000 0000 = Fragment offset: 0
Time to live: 56
Protocol: UDP (17)
Header checksum: 0x6878 [validation disabled]
[Header checksum status: Unverified]
Source: vms05.newyork.talk4free.com (216.234.64.16)
Destination: 192.168.0.10 (192.168.0.10)
User Datagram Protocol, Src Port: 54550 (54550), Dst Port: 49154 (49154)
Real-Time Transport Protocol
DSCP Field

Chapter 11: Exploring Network Security

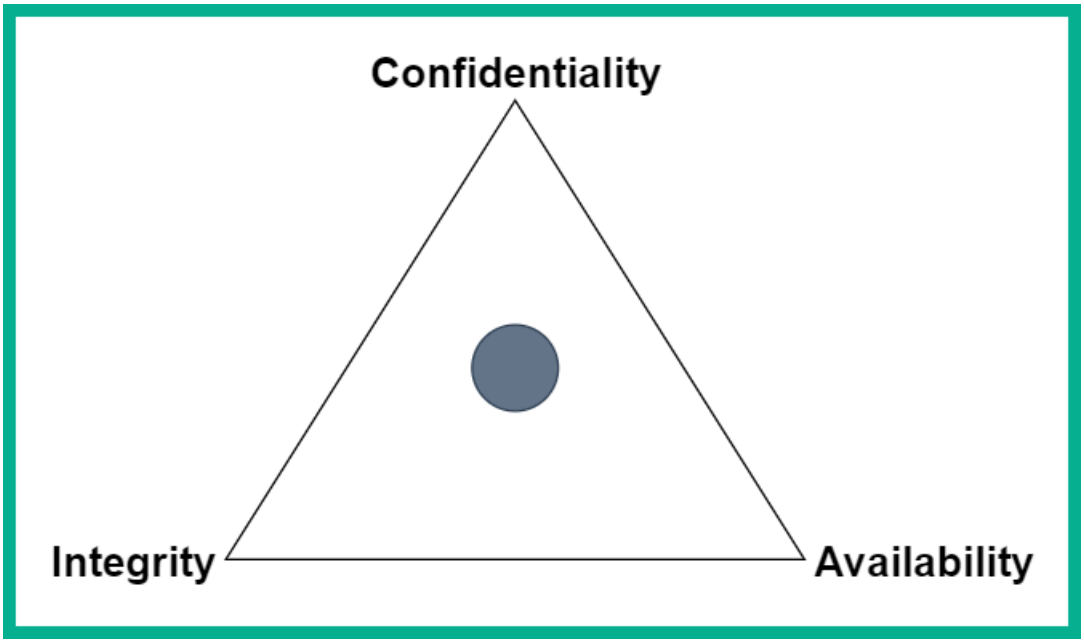


```
Host script results:
| smb-vuln-ms17-010:
|   VULNERABLE:
|   Remote Code Execution vulnerability in Microsoft SMBv1 servers (ms17-010)
|     State: VULNERABLE
|     IDs:  CVE:CVE-2017-0143
|     Risk factor: HIGH
|       A critical remote code execution vulnerability exists in Microsoft SMBv1
|        servers (ms17-010).
|
|     Disclosure date: 2017-03-14
|     References:
|       https://technet.microsoft.com/en-us/library/security/ms17-010.aspx
|       https://blogs.technet.microsoft.com/msrc/2017/05/12/customer-guidance-for-wannacrypt-attacks/
|_      https://cve.mitre.org/cgi-bin/cvename.cgi?name=CVE-2017-0143
```

```
[+] Listening for events...
[*] [LLMNR]  Poisoned answer sent to 10.10.10.14 for name Windows10
[*] [NBT-NS] Poisoned answer sent to 10.10.10.14 for name WINSVR16 (service: Workstation/Redirector)
[*] [NBT-NS] Poisoned answer sent to 10.10.10.14 for name WINSVR16 (service: File Server)
[*] [NBT-NS] Poisoned answer sent to 10.10.10.14 for name PENTESTLAB (service: Domain Master Browser)
[SMBv2] NTLMv2-SSP Client   : 10.10.10.14
[SMBv2] NTLMv2-SSP Username : PENTESTLAB\bob
[SMBv2] NTLMv2-SSP Hash     : bob::PENTESTLAB:83443f84b4d7914d:AF19E4539E28BE7228CFFEE89E1B0AD5:0101000
000000000C0653150DE09D2016969F12C91967196000000000200080053004D004200330001001E00570049004E002D00500052
004800340039003200520051004100460056000400140053004D00420033002E006C006F00630061006C0003003400570049004
E002D00500052004800340039003200520051004100460056002E0053004D00420033002E006C006F00630061006C0005001400
53004D00420033002E006C006F00630061006C0007000800C0653150DE09D2010600040002000000080030003000000000000000
000000000002000004E6B1037D98FAC9C5B50794EB17A0F93686B2154EACC40F6B09AA029269AA7BA0A001000000000000000000
000000000000000000090020006300690066007300 2F00310030002E00310030002E00310030002E00310036000000000000000
00000000000
[*] Skipping previously captured hash for PENTESTLAB\bob
[*] Skipping previously captured hash for PENTESTLAB\bob
```

K6B2y^E*DrXBo3470^SaI#%O
SHOW HISTORY
Password length
24
Easy to say
Easy to read
All characters
Uppercase
Lowercase
Numbers
Symbols
FILL PASSWORD

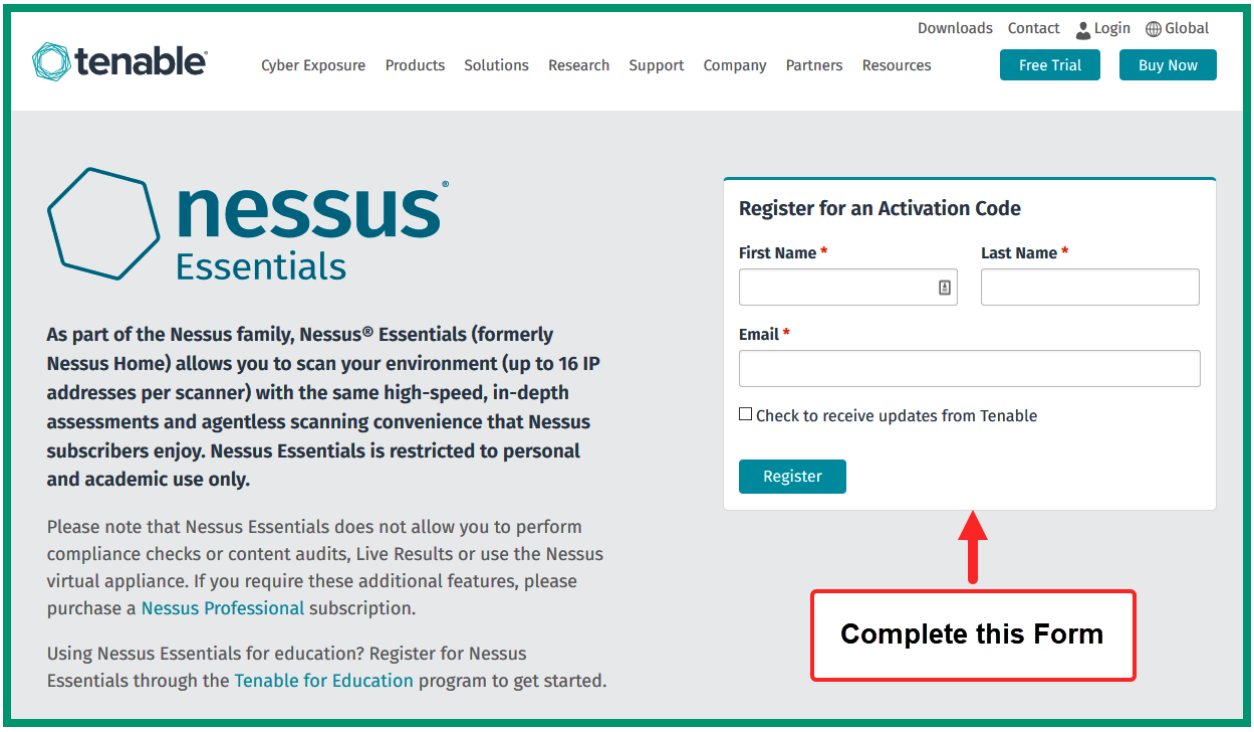
tenable
Downloads
Contact
Login
Global
Cyber Exposure
Products
Solutions
Research
Support
Company
Partners
Resources
Free Trial
Buy Now
nessus
Essentials
As part of the Nessus family, Nessus® Essentials (formerly Nessus Home) allows you to scan your environment (up to 16 IP addresses per scanner) with the same high-speed, in-depth assessments and agentless scanning convenience that Nessus subscribers enjoy. Nessus Essentials is restricted to personal and academic use only.
Please note that Nessus Essentials does not allow you to perform compliance checks or content audits, Live Results or use the Nessus virtual appliance. If you require these additional features, please purchase a Nessus Professional subscription.
Using Nessus Essentials for education? Register for Nessus Essentials through the Tenable for Education program to get started.
Register for an Activation Code
First Name *
Last Name *
Email *
Check to receive updates from Tenable
Register
Complete this Form

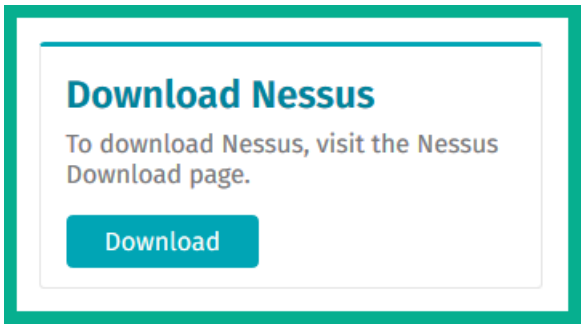
Download Nessus
To download Nessus, visit the Nessus Download page.
Download

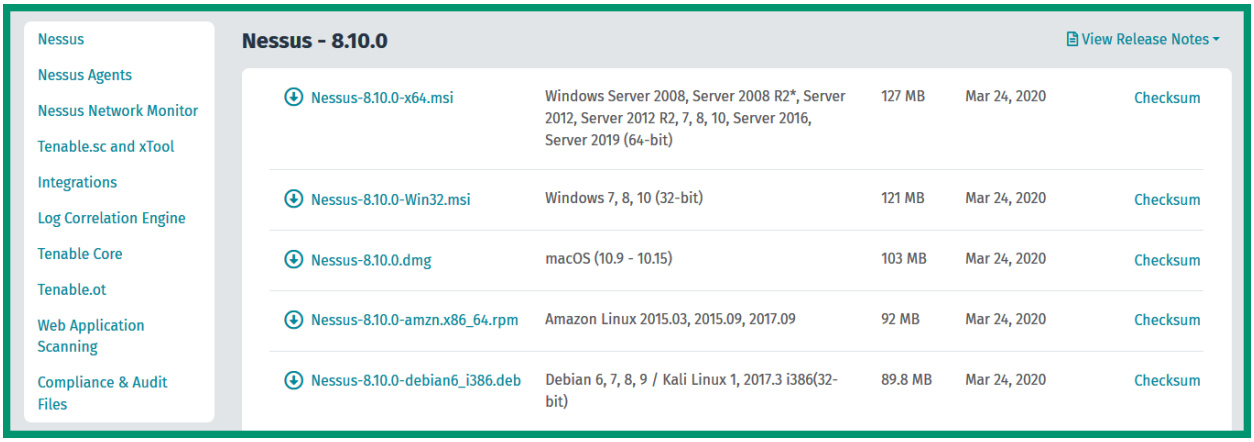
Nessus
Nessus Agents
Nessus Network Monitor
Tenable.sc and xTool
Integrations
Log Correlation Engine
Tenable Core
Tenable.ot
Web Application Scanning
Compliance & Audit Files
Nessus - 8.10.0
View Release Notes
Nessus-8.10.0-x64.msi
Windows Server 2008, Server 2008 R2*, Server 2012, Server 2012 R2, 7, 8, 10, Server 2016, Server 2019 (64-bit)
127 MB
Mar 24, 2020
Checksum
Nessus-8.10.0-Win32.msi
Windows 7, 8, 10 (32-bit)
121 MB
Mar 24, 2020
Checksum
Nessus-8.10.0.dmg
macOS (10.9 - 10.15)
103 MB
Mar 24, 2020
Checksum
Nessus-8.10.0-amzn.x86_64.rpm
Amazon Linux 2015.03, 2015.09, 2017.09
92 MB
Mar 24, 2020
Checksum
Nessus-8.10.0-debian6_i386.deb
Debian 6, 7, 8, 9 / Kali Linux 1, 2017.3 i386(32-bit)
89.8 MB
Mar 24, 2020
Checksum

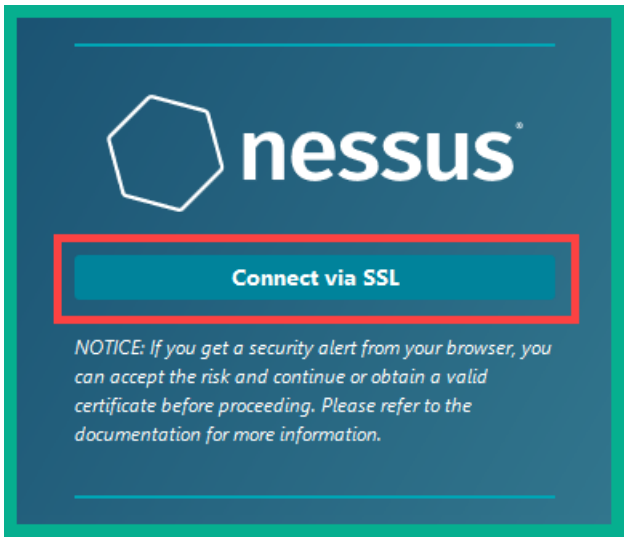
nessus
Connect via SSL
NOTICE: If you get a security alert from your browser, you can accept the risk and continue or obtain a valid certificate before proceeding. Please refer to the documentation for more information.

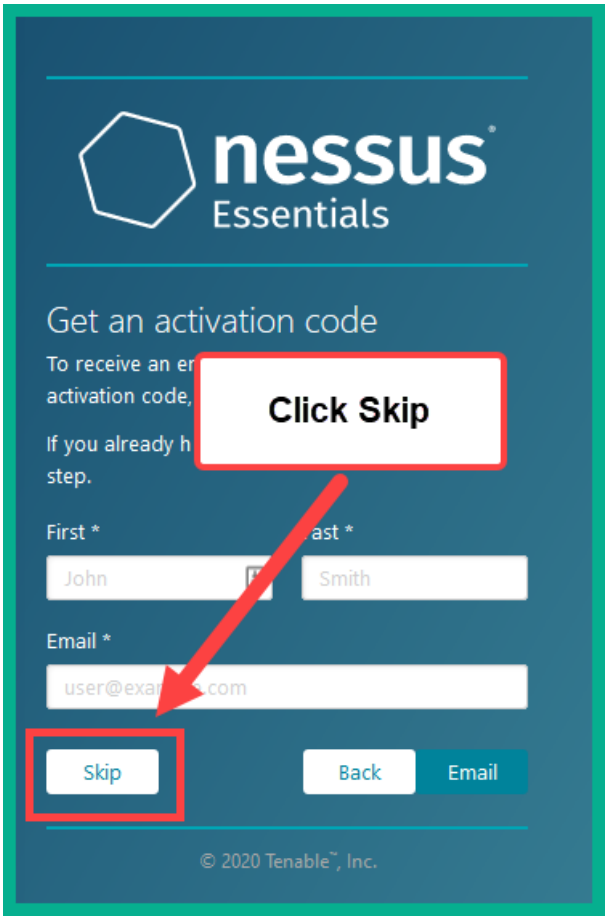
nessus
Essentials
Get an activation code
To receive an er
activation code,
If you already h
step.
Click Skip
First *
ast *
John
Smith
Email *
user@exa com
Skip
Back
Email
© 2020 Tenable™, Inc.

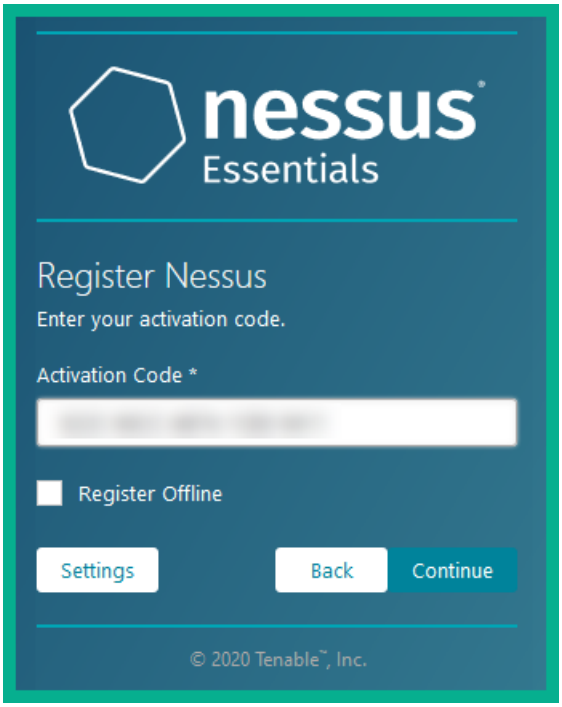
nessus
Essentials
Register Nessus
Enter your activation code.
Activation Code *
Register Offline
Settings
Back
Continue
© 2020 Tenable™, Inc.

```
Microsoft Windows [Version 10.0.18363.836]
(c) 2019 Microsoft Corporation. All rights reserved.

C:\WINDOWS\system32>cd C:\Program Files\Tenable\Nessus

C:\Program Files\Tenable\Nessus>nessuscli update
Refreshing Nessus license information... complete; continuing with updates.


----- Fetching the newest updates from nessus.org -----

Nessus Plugins: Downloading (0%)
Nessus Plugins: Downloading (1%)
Nessus Plugins: Downloading (3%)
Nessus Plugins: Downloading (4%)
```

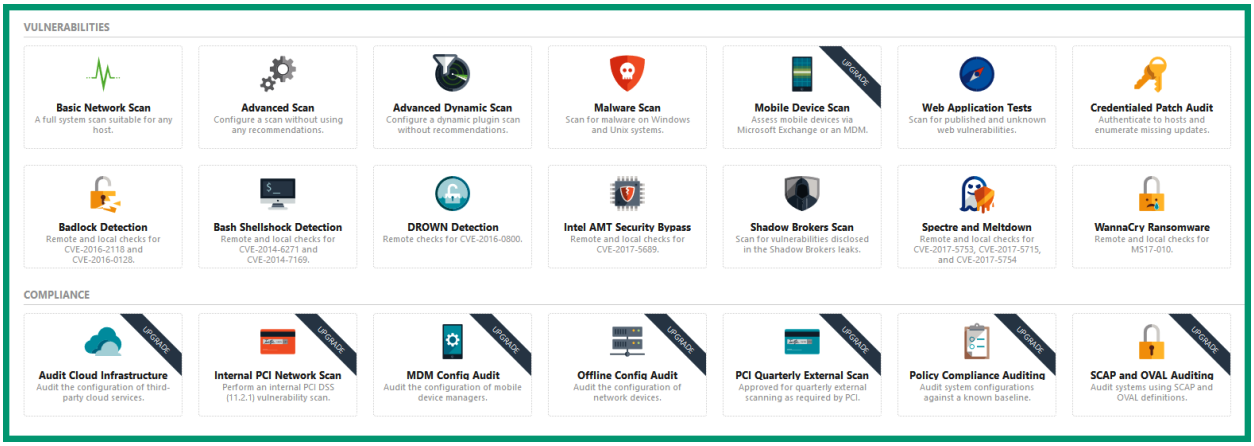

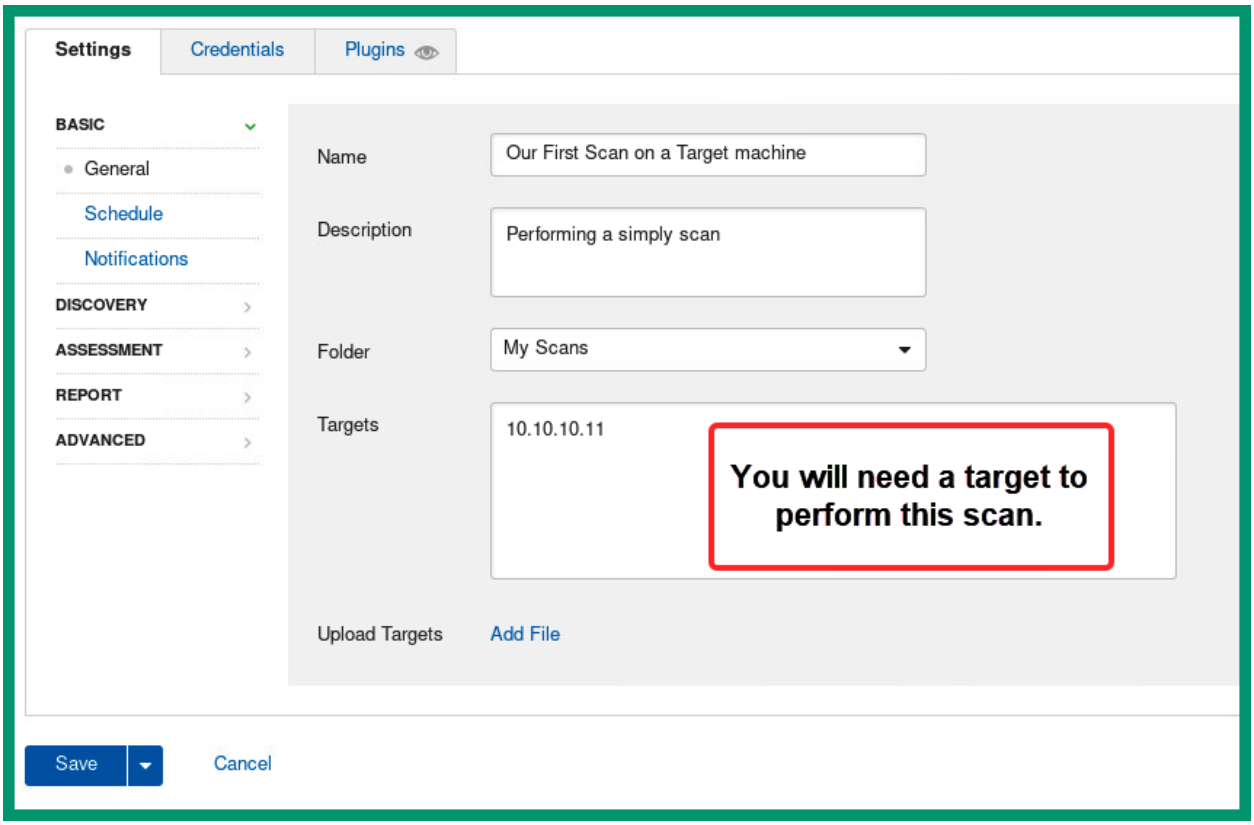
Settings
Credentials
Plugins
BASIC
General
Schedule
Notifications
DISCOVERY
ASSESSMENT
REPORT
ADVANCED
Name
Our First Scan on a Target machine
Description
Performing a simply scan
Folder
My Scans
Targets
10.10.10.11
You will need a target to perform this scan.
Upload Targets
Add File
Save
Cancel

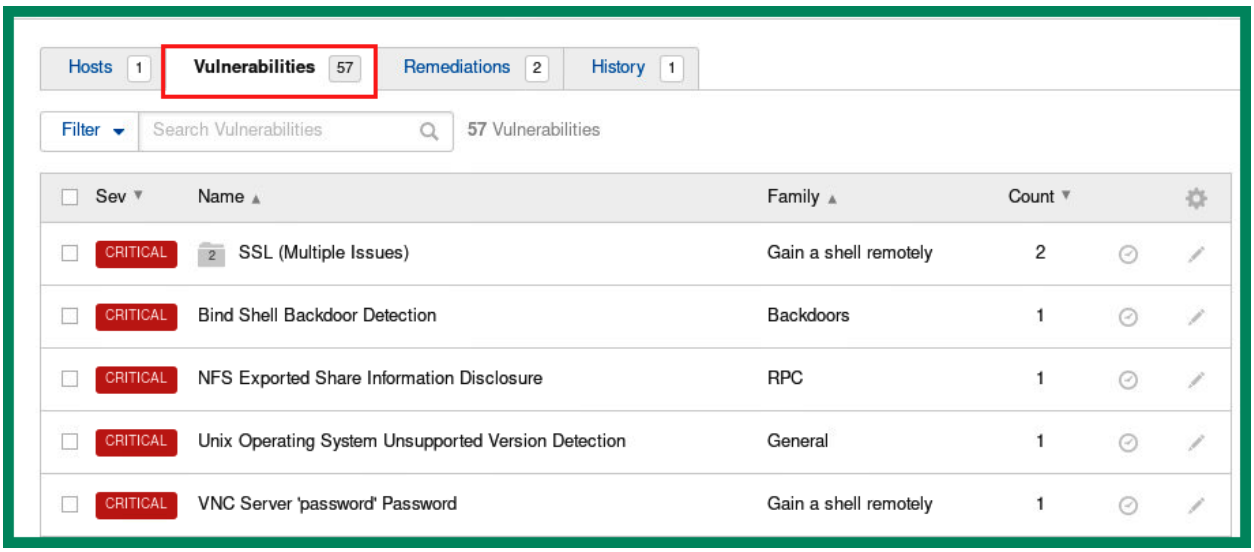
Hosts 1
Vulnerabilities 57
Remediations 2
History 1
Filter
Search Vulnerabilities
57 Vulnerabilities
Sev
Name
Family
Count
CRITICAL
SSL (Multiple Issues)
Gain a shell remotely
2
CRITICAL
Bind Shell Backdoor Detection
Backdoors
1
CRITICAL
NFS Exported Share Information Disclosure
RPC
1
CRITICAL
Unix Operating System Unsupported Version Detection
General
1
CRITICAL
VNC Server 'password' Password
Gain a shell remotely
1

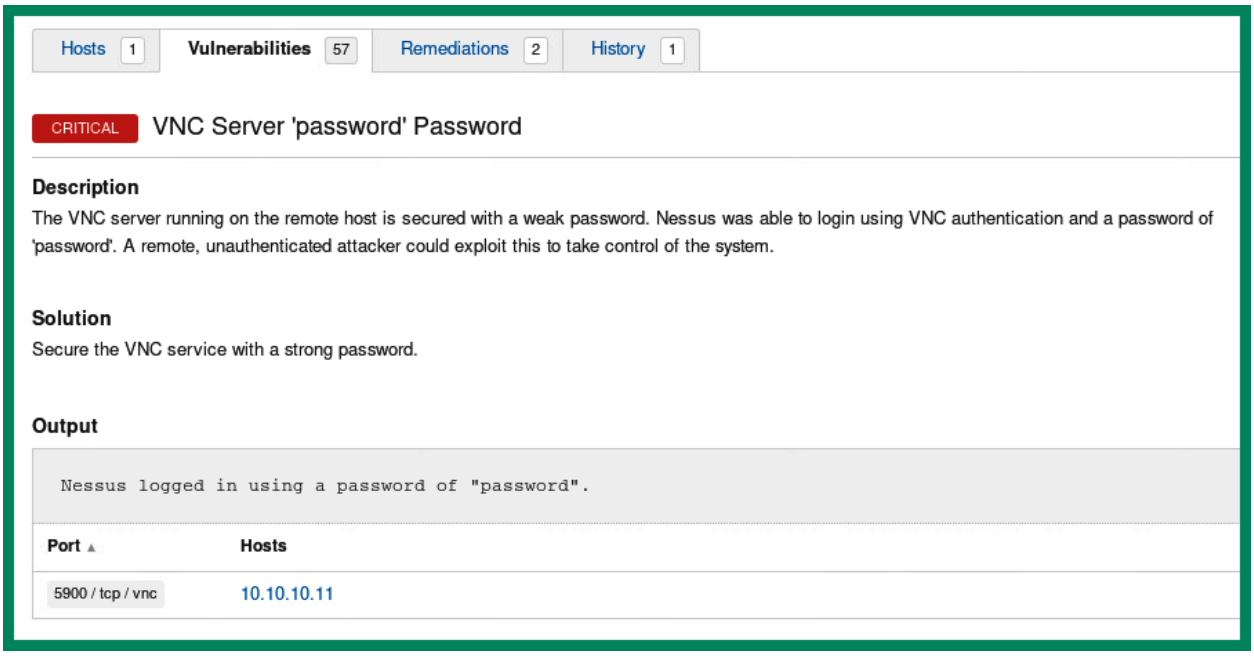

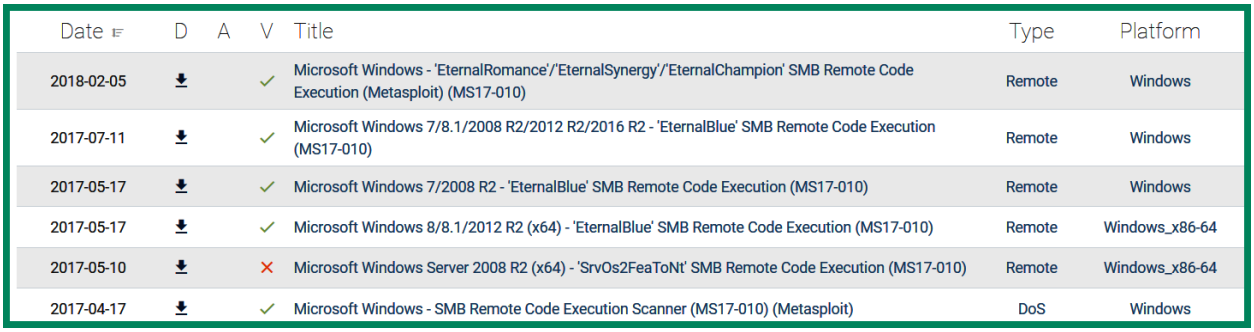

Date	D	A	V	Title	Type	Platform
2018-02-05			✓	Microsoft Windows - 'EternalRomance'/'EternalSynergy'/'EternalChampion' SMB Remote Code Execution (Metasploit) (MS17-010)	Remote	Windows
2017-07-11			✓	Microsoft Windows 7/8.1/2008 R2/2012 R2/2016 R2 - 'EternalBlue' SMB Remote Code Execution (MS17-010)	Remote	Windows
2017-05-17			✓	Microsoft Windows 7/2008 R2 - 'EternalBlue' SMB Remote Code Execution (MS17-010)	Remote	Windows
2017-05-17			✓	Microsoft Windows 8/8.1/2012 R2 (x64) - 'EternalBlue' SMB Remote Code Execution (MS17-010)	Remote	Windows_x86-64
2017-05-10			✗	Microsoft Windows Server 2008 R2 (x64) - 'SrvOs2FeaToNt' SMB Remote Code Execution (MS17-010)	Remote	Windows_x86-64
2017-04-17			✓	Microsoft Windows - SMB Remote Code Execution Scanner (MS17-010) (Metasploit)	DoS	Windows

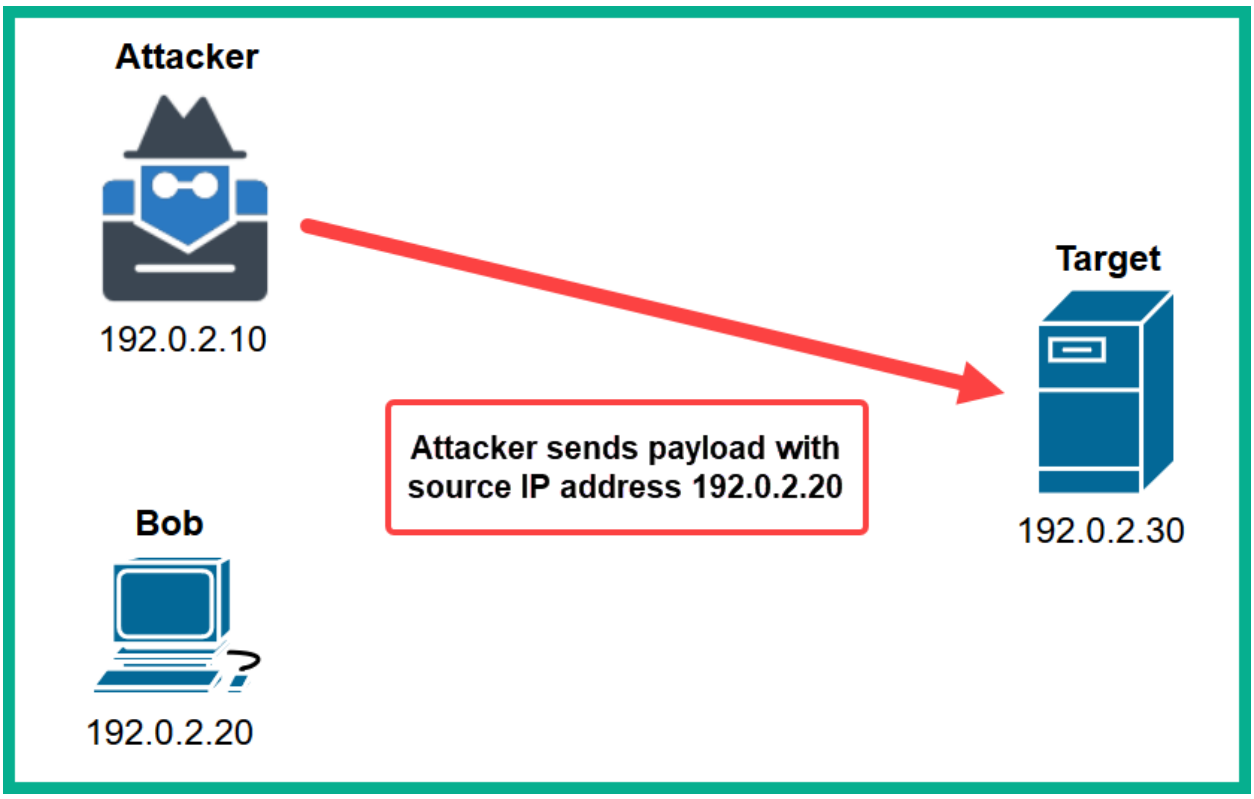
Attacker
192.0.2.10
Target
192.0.2.30
Attacker sends payload with source IP address 192.0.2.20
Bob
192.0.2.20

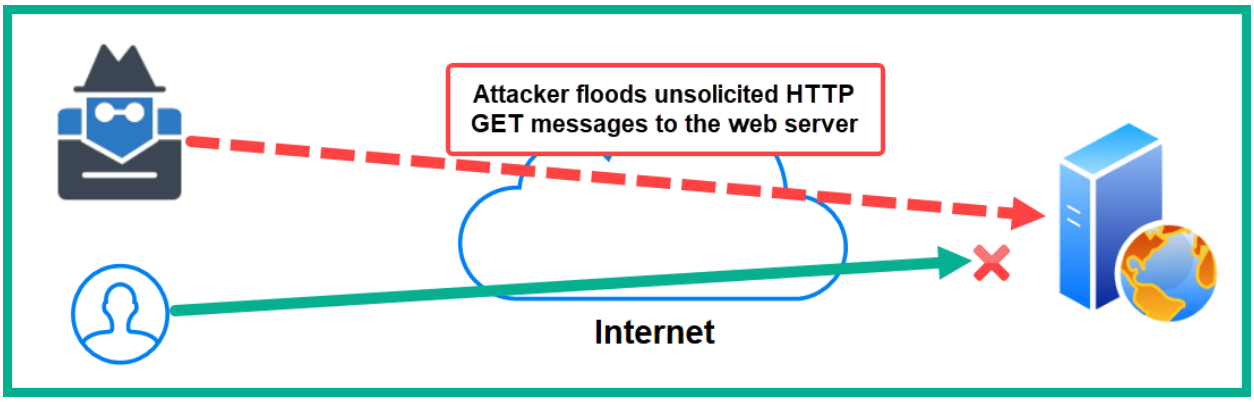
Attacker floods unsolicited HTTP GET messages to the web server
Internet

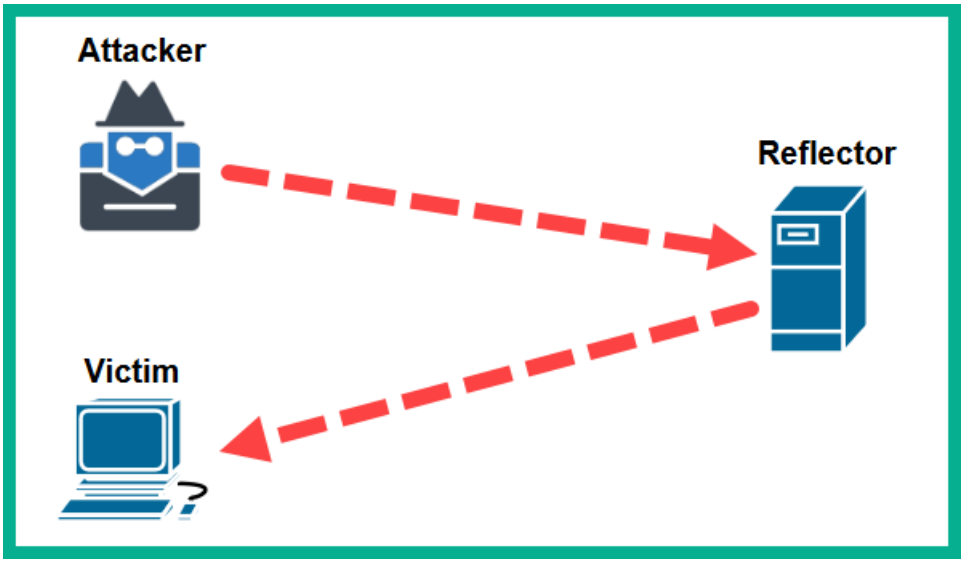
Attacker
Reflector
Victim

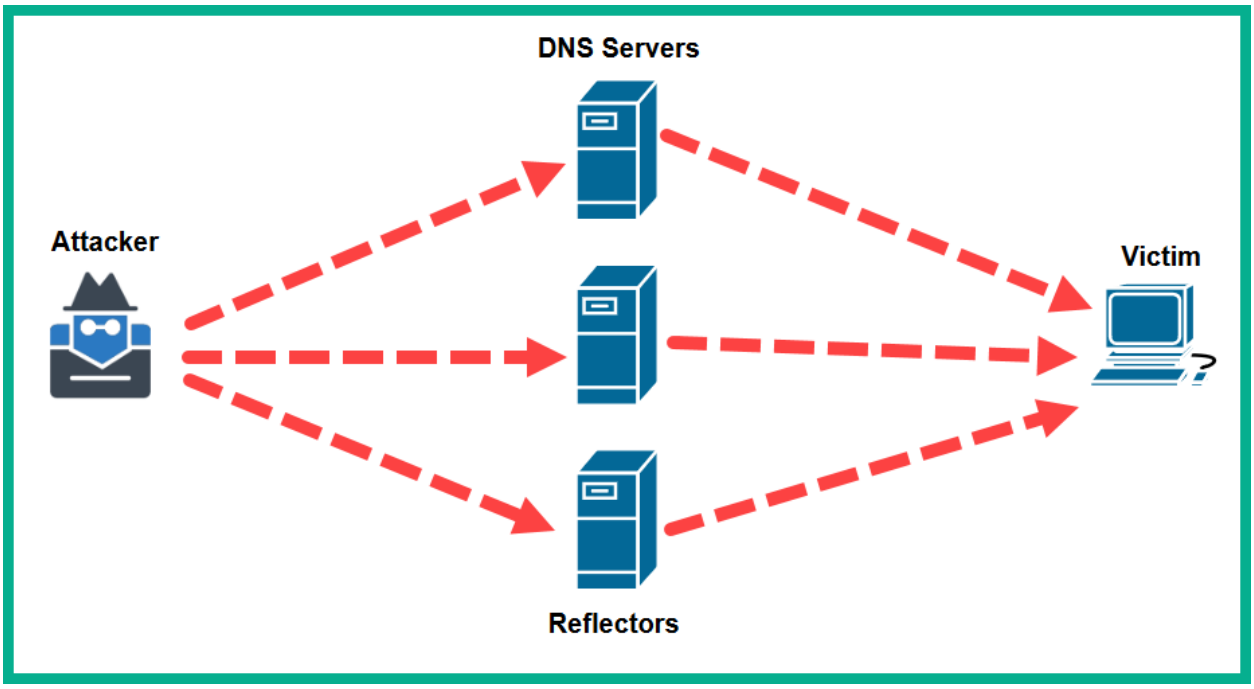
DNS Servers
Attacker
Victim
Reflectors

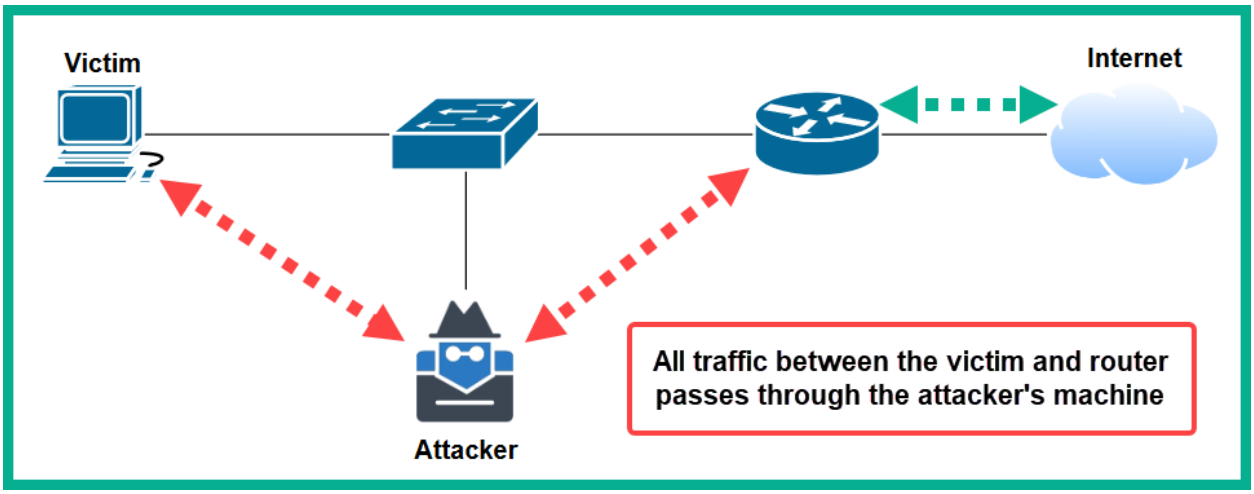
Victim
Internet
Attacker
All traffic between the victim and router passes through the attacker's machine

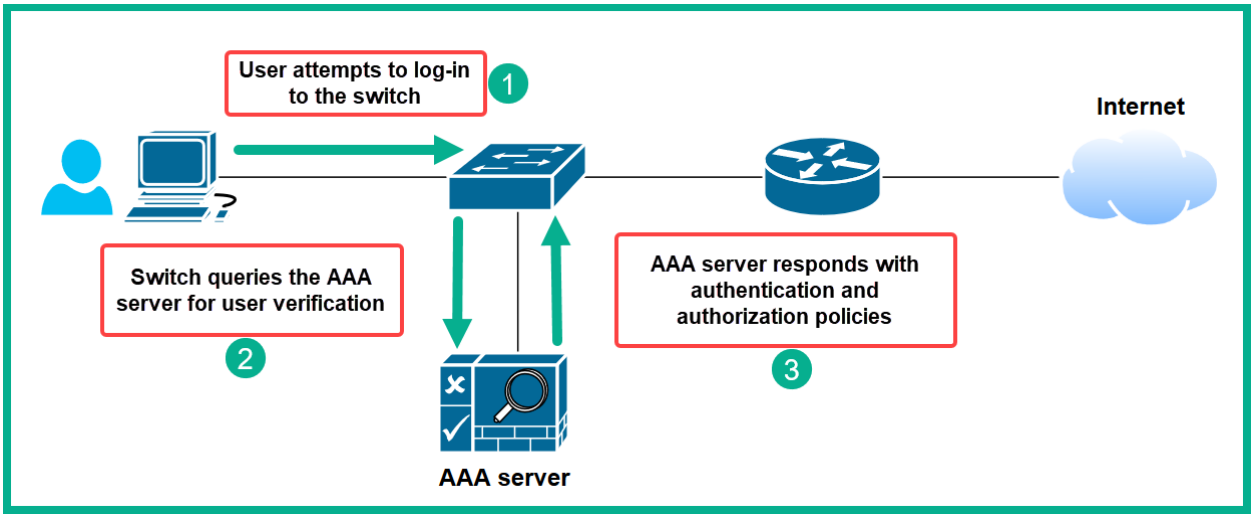
User attempts to log-in to the switch
1
Internet
Switch queries the AAA server for user verification
2
AAA server responds with authentication and authorization policies
3
AAA server

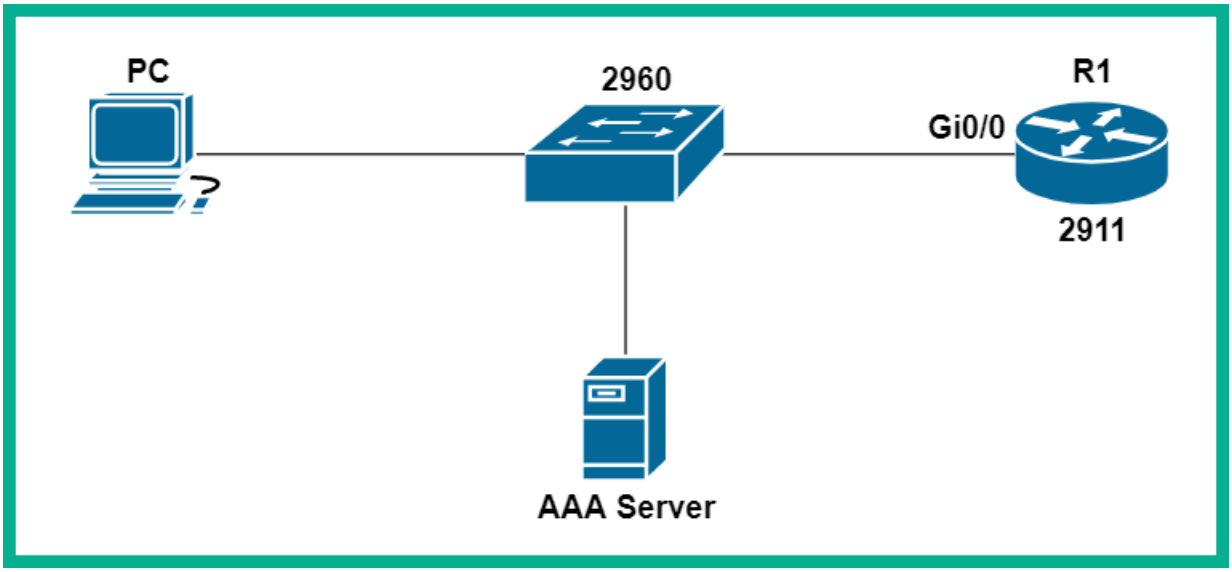
PC
2960
R1
Gi0/0
2911
AAA Server

Device	IP Address	Subnet Mask	Gateway
PC	192.168.1.10	255.255.255.0	192.168.1.1
Router	192.168.1.1	255.255.255.0	
Server	192.168.1.5	255.255.255.0	192.168.1.1

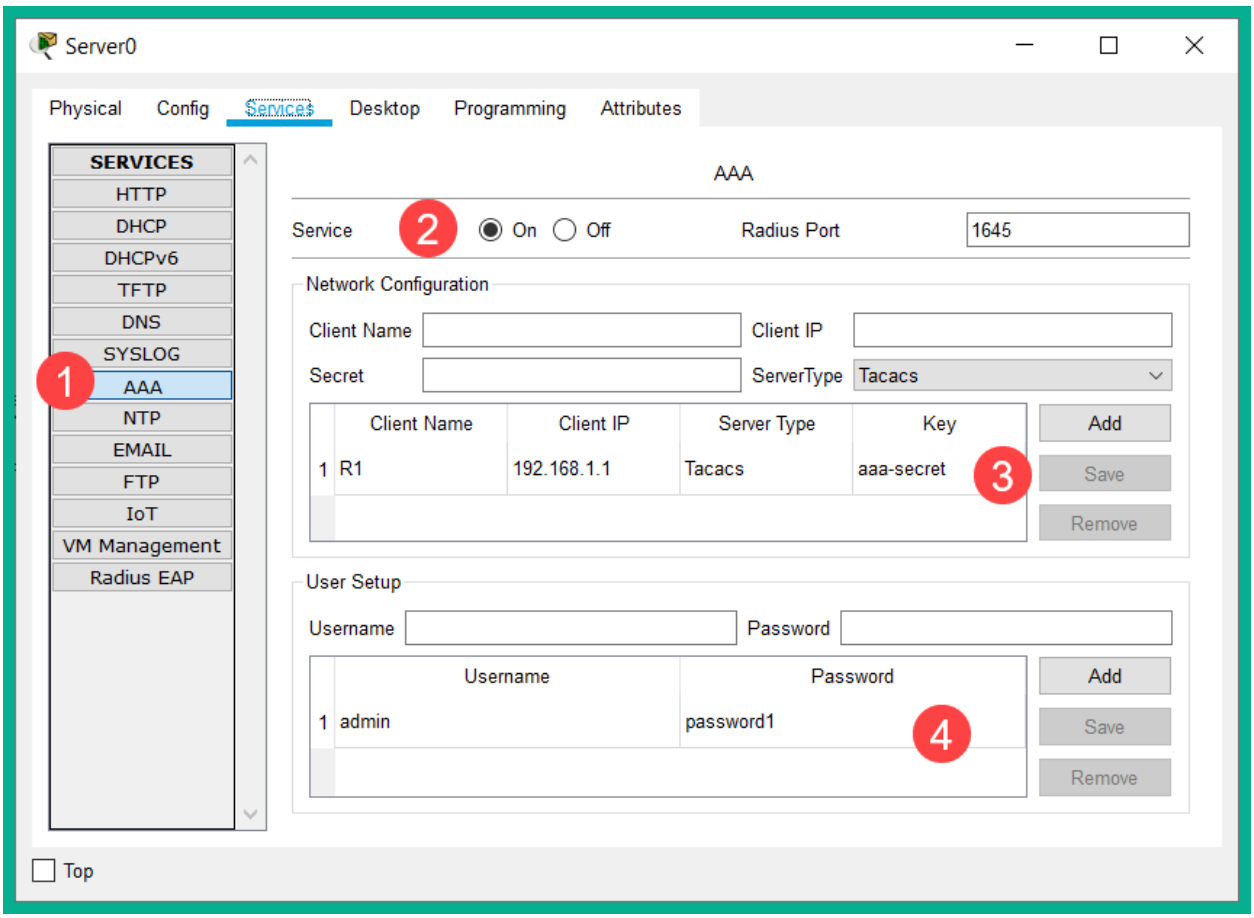

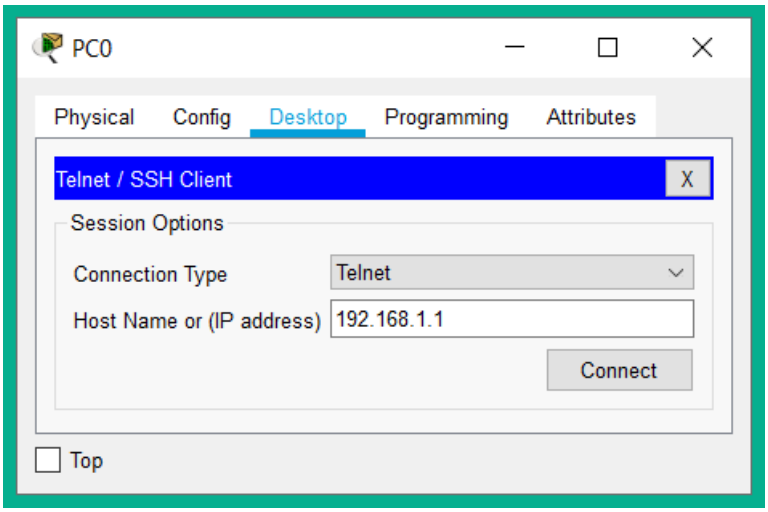

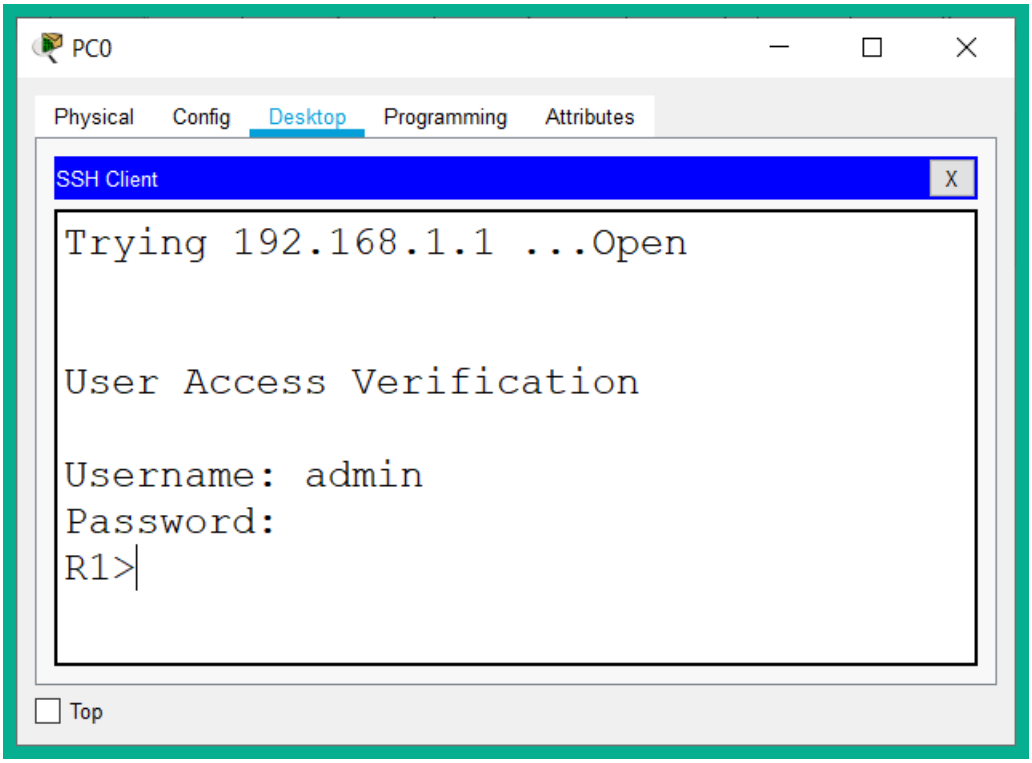
PC0
Physical
Config
Desktop
Programming
Attributes
SSH Client
X
Trying 192.168.1.1 ...Open
User Access Verification
Username: admin
Password:
R1>
Top

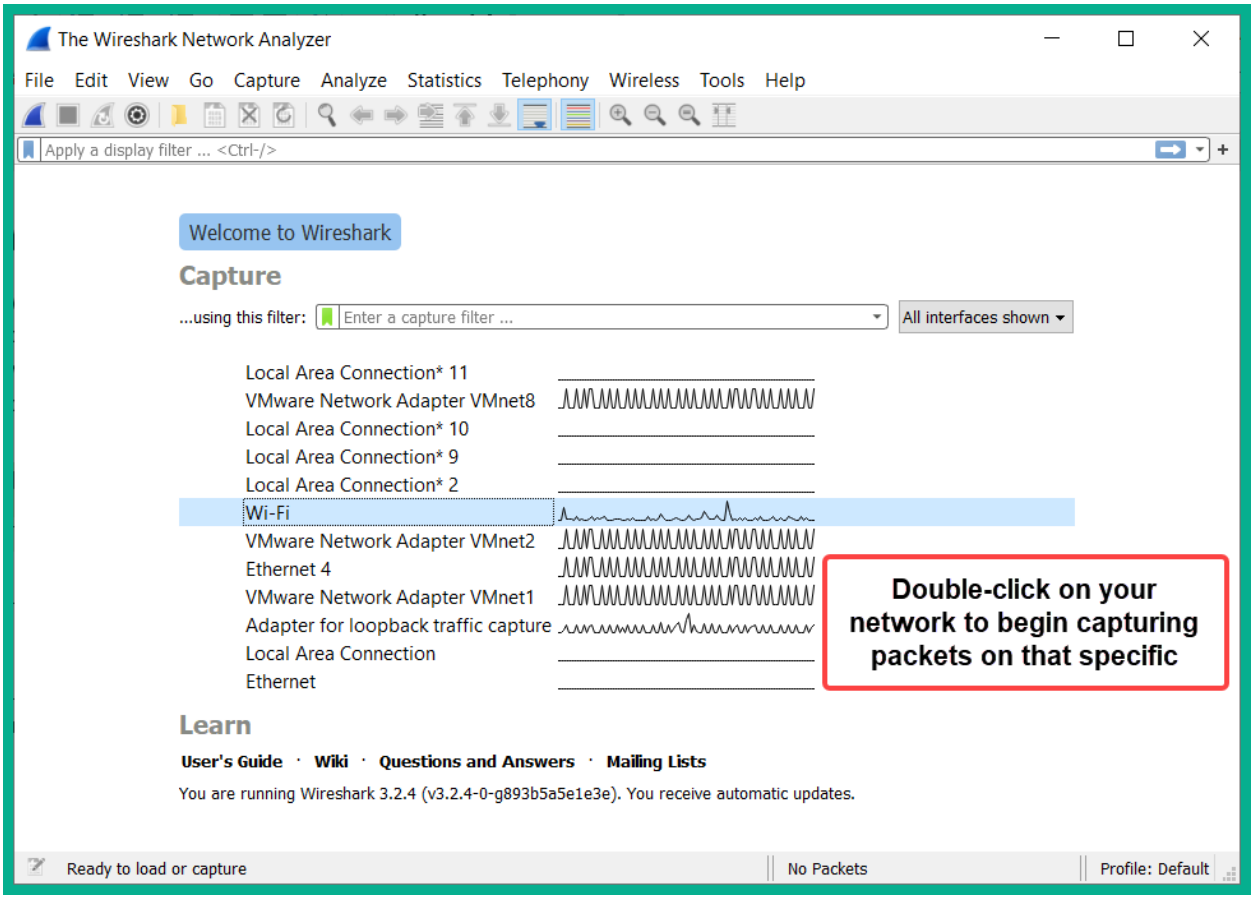
The Wireshark Network Analyzer
File Edit View Go Capture Analyze Statistics Telephony Wireless Tools Help
Apply a display filter ... <Ctrl-/>
Welcome to Wireshark
Capture
...using this filter: Enter a capture filter ...
All interfaces shown
Local Area Connection* 11
VMware Network Adapter VMnet8
Local Area Connection* 10
Local Area Connection* 9
Local Area Connection* 2
Wi-Fi
VMware Network Adapter VMnet2
Ethernet 4
VMware Network Adapter VMnet1
Adapter for loopback traffic capture
Local Area Connection
Ethernet
Double-click on your network to begin capturing packets on that specific
Learn
User's Guide · Wiki · Questions and Answers · Mailing Lists
You are running Wireshark 3.2.4 (v3.2.4-0-g893b5a5e1e3e). You receive automatic updates.
Ready to load or capture
No Packets
Profile: Default

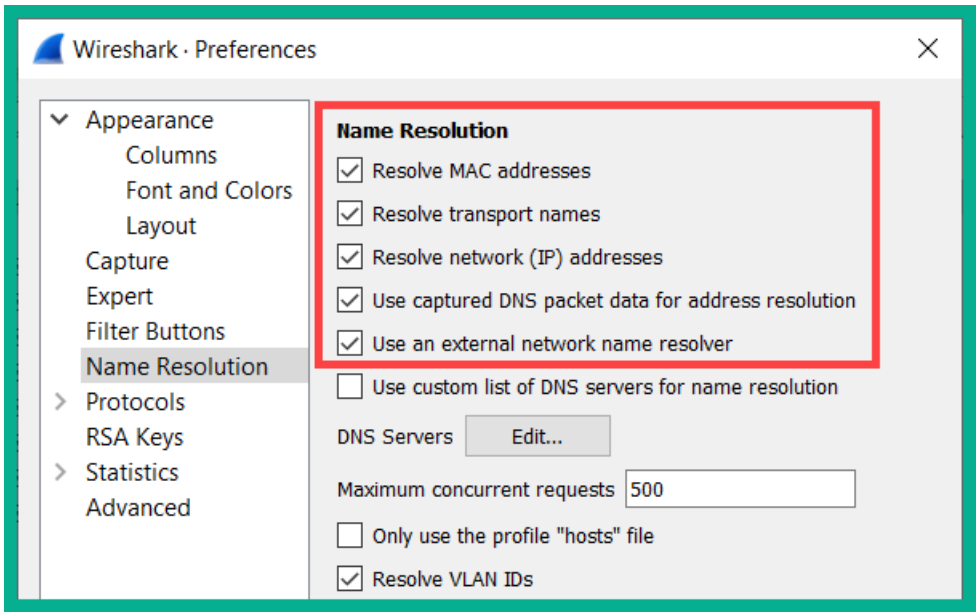
Wireshark · Preferences
Appearance
Columns
Font and Colors
Layout
Capture
Expert
Filter Buttons
Name Resolution
Protocols
RSA Keys
Statistics
Advanced
Name Resolution
Resolve MAC addresses
Resolve transport names
Resolve network (IP) addresses
Use captured DNS packet data for address resolution
Use an external network name resolver
Use custom list of DNS servers for name resolution
DNS Servers
Edit...
Maximum concurrent requests
500
Only use the profile "hosts" file
Resolve VLAN IDs

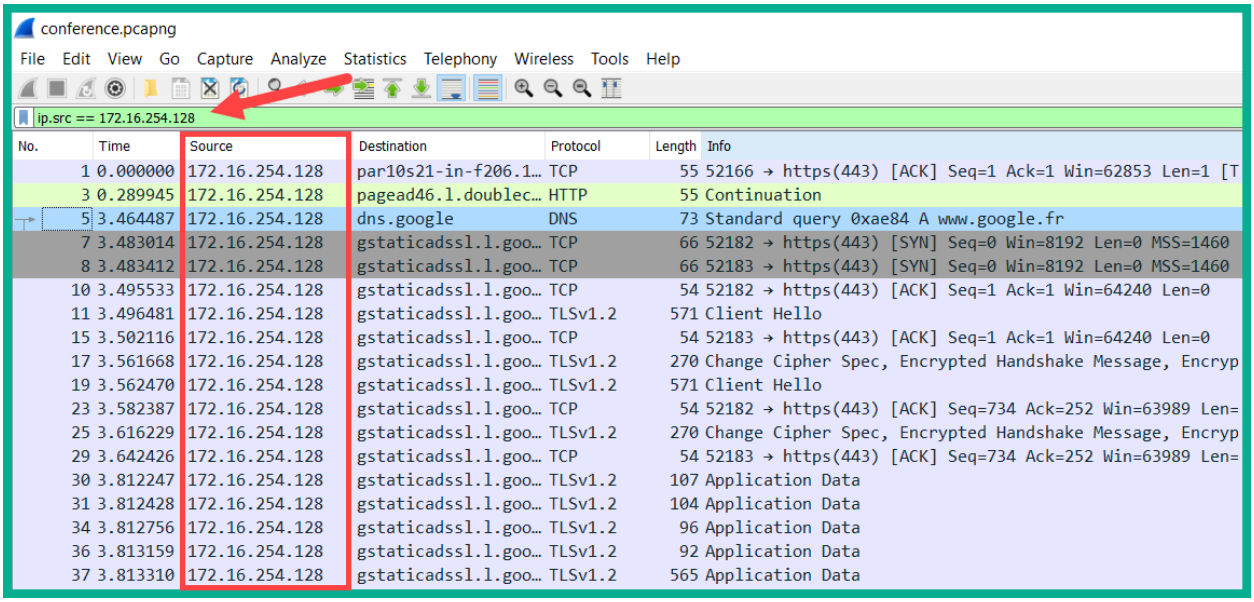
conference.pcapng
File Edit View Go Capture Analyze Statistics Telephony Wireless Tools Help
ip.src == 172.16.254.128
No. Time Source Destination Protocol Length Info
1 0.000000 172.16.254.128 par10s21-in-f206.1… TCP 55 52166 → https(443) [ACK] Seq=1 Ack=1 Win=62853 Len=1 [T
3 0.289945 172.16.254.128 pagead46.l.doublec… HTTP 55 Continuation
5 3.464487 172.16.254.128 dns.google DNS 73 Standard query 0xae84 A www.google.fr
7 3.483014 172.16.254.128 gstaticadssl.l.goo… TCP 66 52182 → https(443) [SYN] Seq=0 Win=8192 Len=0 MSS=1460
8 3.483412 172.16.254.128 gstaticadssl.l.goo… TCP 66 52183 → https(443) [SYN] Seq=0 Win=8192 Len=0 MSS=1460
10 3.495533 172.16.254.128 gstaticadssl.l.goo… TCP 54 52182 → https(443) [ACK] Seq=1 Ack=1 Win=64240 Len=0
11 3.496481 172.16.254.128 gstaticadssl.l.goo… TLSv1.2 571 Client Hello
15 3.502116 172.16.254.128 gstaticadssl.l.goo… TCP 54 52183 → https(443) [ACK] Seq=1 Ack=1 Win=64240 Len=0
17 3.561668 172.16.254.128 gstaticadssl.l.goo… TLSv1.2 270 Change Cipher Spec, Encrypted Handshake Message, Encryp
19 3.562470 172.16.254.128 gstaticadssl.l.goo… TLSv1.2 571 Client Hello
23 3.582387 172.16.254.128 gstaticadssl.l.goo… TCP 54 52182 → https(443) [ACK] Seq=734 Ack=252 Win=63989 Len=
25 3.616229 172.16.254.128 gstaticadssl.l.goo… TLSv1.2 270 Change Cipher Spec, Encrypted Handshake Message, Encryp
29 3.642426 172.16.254.128 gstaticadssl.l.goo… TCP 54 52183 → https(443) [ACK] Seq=734 Ack=252 Win=63989 Len=
30 3.812247 172.16.254.128 gstaticadssl.l.goo… TLSv1.2 107 Application Data
31 3.812428 172.16.254.128 gstaticadssl.l.goo… TLSv1.2 104 Application Data
34 3.812756 172.16.254.128 gstaticadssl.l.goo… TLSv1.2 96 Application Data
36 3.813159 172.16.254.128 gstaticadssl.l.goo… TLSv1.2 92 Application Data
37 3.813310 172.16.254.128 gstaticadssl.l.goo… TLSv1.2 565 Application Data

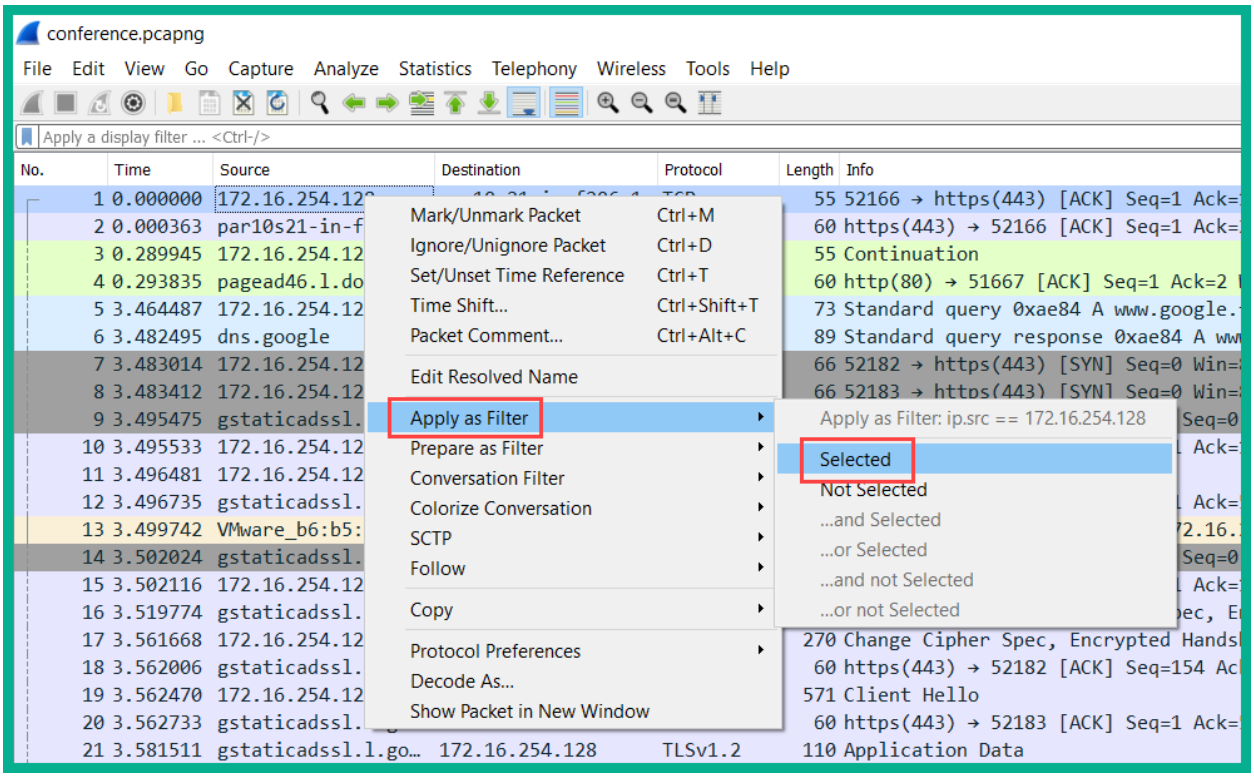
conference.pcapng
File Edit View Go Capture Analyze Statistics Telephony Wireless Tools Help
Apply a display filter ... <Ctrl-/>
No. Time Source Destination Protocol Length Info
1 0.000000 172.16.254.12 55 52166 → https(443) [ACK] Seq=1 Ack=
2 0.000363 par10s21-in-f 60 https(443) → 52166 [ACK] Seq=1 Ack=
3 0.289945 172.16.254.12 55 Continuation
4 0.293835 pagead46.l.do 60 http(80) → 51667 [ACK] Seq=1 Ack=2
5 3.464487 172.16.254.12 73 Standard query 0xae84 A www.google.
6 3.482495 dns.google 89 Standard query response 0xae84 A ww
7 3.483014 172.16.254.12 66 52182 → https(443) [SYN] Seq=0 Win=
8 3.483412 172.16.254.12 66 52183 → https(443) [SYN] Seq=0 Win=
9 3.495475 gstaticadssl. Seq=0
10 3.495533 172.16.254.12 Ack=
11 3.496481 172.16.254.12
12 3.496735 gstaticadssl. Ack=
13 3.499742 VMware_b6:b5: 72.16.
14 3.502024 gstaticadssl. Seq=0
15 3.502116 172.16.254.12 Ack=
16 3.519774 gstaticadssl. ec, E
17 3.561668 172.16.254.12 270 Change Cipher Spec, Encrypted Hands
18 3.562006 gstaticadssl. 60 https(443) → 52182 [ACK] Seq=154 Ac
19 3.562470 172.16.254.12 571 Client Hello
20 3.562733 gstaticadssl. 60 https(443) → 52183 [ACK] Seq=1 Ack=
21 3.581511 gstaticadssl.l.go... 172.16.254.128 TLSv1.2 110 Application Data
Mark/Unmark Packet Ctrl+M
Ignore/Unignore Packet Ctrl+D
Set/Unset Time Reference Ctrl+T
Time Shift... Ctrl+Shift+T
Packet Comment... Ctrl+Alt+C
Edit Resolved Name
Apply as Filter
Prepare as Filter
Conversation Filter
Colorize Conversation
SCTP
Follow
Copy
Protocol Preferences
Decode As...
Show Packet in New Window
Apply as Filter: ip.src == 172.16.254.128
Selected
Not Selected
...and Selected
...or Selected
...and not Selected
...or not Selected

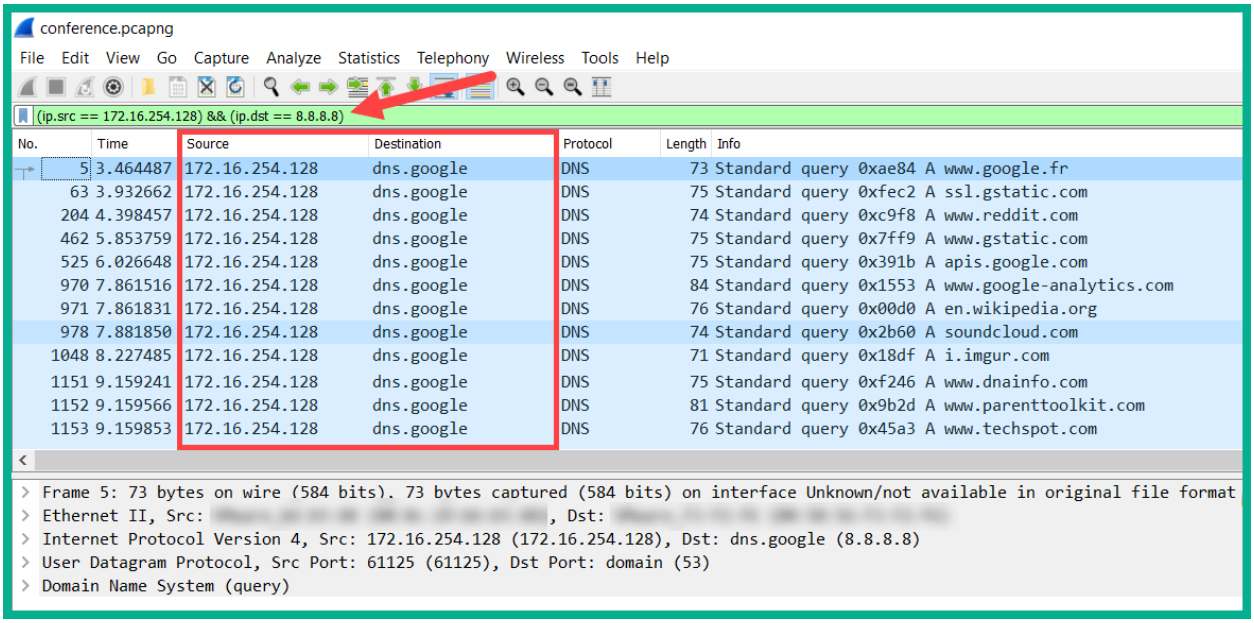
conference.pcapng
File Edit View Go Capture Analyze Statistics Telephony Wireless Tools Help
(ip.src == 172.16.254.128) && (ip.dst == 8.8.8.8)
No. Time Source Destination Protocol Length Info
5 3.464487 172.16.254.128 dns.google DNS 73 Standard query 0xae84 A www.google.fr
63 3.932662 172.16.254.128 dns.google DNS 75 Standard query 0xfec2 A ssl.gstatic.com
204 4.398457 172.16.254.128 dns.google DNS 74 Standard query 0xc9f8 A www.reddit.com
462 5.853759 172.16.254.128 dns.google DNS 75 Standard query 0x7ff9 A www.gstatic.com
525 6.026648 172.16.254.128 dns.google DNS 75 Standard query 0x391b A apis.google.com
970 7.861516 172.16.254.128 dns.google DNS 84 Standard query 0x1553 A www.google-analytics.com
971 7.861831 172.16.254.128 dns.google DNS 76 Standard query 0x00d0 A en.wikipedia.org
978 7.881850 172.16.254.128 dns.google DNS 74 Standard query 0x2b60 A soundcloud.com
1048 8.227485 172.16.254.128 dns.google DNS 71 Standard query 0x18df A i.imgur.com
1151 9.159241 172.16.254.128 dns.google DNS 75 Standard query 0xf246 A www.dnainfo.com
1152 9.159566 172.16.254.128 dns.google DNS 81 Standard query 0x9b2d A www.parenttoolkit.com
1153 9.159853 172.16.254.128 dns.google DNS 76 Standard query 0x45a3 A www.techspot.com
Frame 5: 73 bytes on wire (584 bits), 73 bytes captured (584 bits) on interface Unknown/not available in original file format
Ethernet II, Src: , Dst:
Internet Protocol Version 4, Src: 172.16.254.128 (172.16.254.128), Dst: dns.google (8.8.8.8)
User Datagram Protocol, Src Port: 61125 (61125), Dst Port: domain (53)
Domain Name System (query)

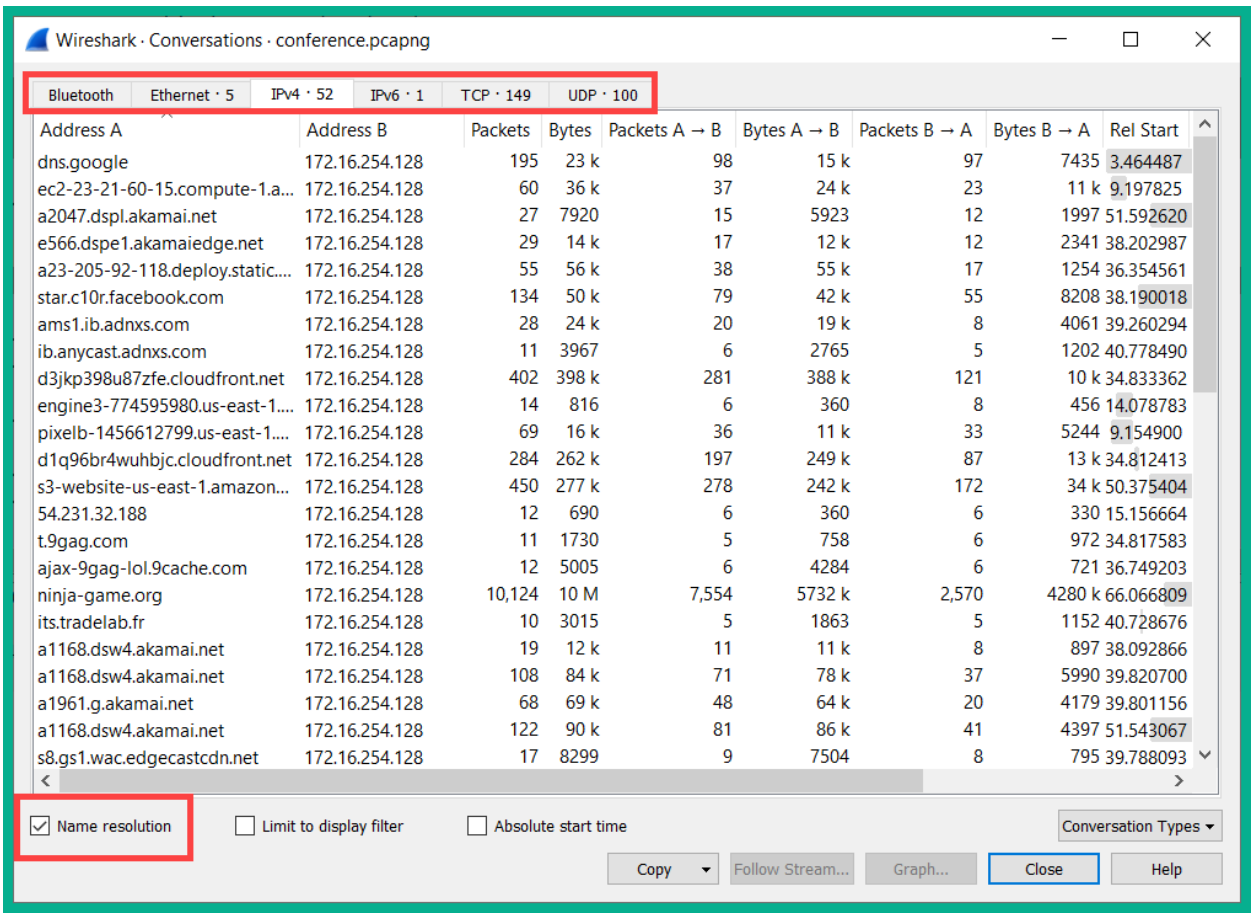
Wireshark · Conversations · conference.pcapng
Bluetooth
Ethernet · 5
IPv4 · 52
IPv6 · 1
TCP · 149
UDP · 100
Address A
Address B
Packets
Bytes
Packets A → B
Bytes A → B
Packets B → A
Bytes B → A
Rel Start
dns.google 172.16.254.128 195 23 k 98 15 k 97 7435 3.464487
ec2-23-21-60-15.compute-1.a... 172.16.254.128 60 36 k 37 24 k 23 11 k 9.197825
a2047.dspl.akamai.net 172.16.254.128 27 7920 15 5923 12 1997 51.592620
e566.dspe1.akamaiedge.net 172.16.254.128 29 14 k 17 12 k 12 2341 38.202987
a23-205-92-118.deploy.static.... 172.16.254.128 55 56 k 38 55 k 17 1254 36.354561
star.c10r.facebook.com 172.16.254.128 134 50 k 79 42 k 55 8208 38.190018
ams1.ib.adnxs.com 172.16.254.128 28 24 k 20 19 k 8 4061 39.260294
ib.anycast.adnxs.com 172.16.254.128 11 3967 6 2765 5 1202 40.778490
d3jkp398u87zfe.cloudfront.net 172.16.254.128 402 398 k 281 388 k 121 10 k 34.833362
engine3-774595980.us-east-1.... 172.16.254.128 14 816 6 360 8 456 14.078783
pixelb-1456612799.us-east-1.... 172.16.254.128 69 16 k 36 11 k 33 5244 9.154900
d1q96br4wuhbjc.cloudfront.net 172.16.254.128 284 262 k 197 249 k 87 13 k 34.812413
s3-website-us-east-1.amazon... 172.16.254.128 450 277 k 278 242 k 172 34 k 50.375404
54.231.32.188 172.16.254.128 12 690 6 360 6 330 15.156664
t.9gag.com 172.16.254.128 11 1730 5 758 6 972 34.817583
ajax-9gag-lol.9cache.com 172.16.254.128 12 5005 6 4284 6 721 36.749203
ninja-game.org 172.16.254.128 10,124 10 M 7,554 5732 k 2,570 4280 k 66.066809
its.tradelab.fr 172.16.254.128 10 3015 5 1863 5 1152 40.728676
a1168.dsw4.akamai.net 172.16.254.128 19 12 k 11 11 k 8 897 38.092866
a1168.dsw4.akamai.net 172.16.254.128 108 84 k 71 78 k 37 5990 39.820700
a1961.g.akamai.net 172.16.254.128 68 69 k 48 64 k 20 4179 39.801156
a1168.dsw4.akamai.net 172.16.254.128 122 90 k 81 86 k 41 4397 51.543067
s8.gs1.wac.edgecastcdn.net 172.16.254.128 17 8299 9 7504 8 795 39.788093
Name resolution
Limit to display filter
Absolute start time
Conversation Types
Copy
Follow Stream...
Graph...
Close
Help

Wireshark · Packet 1 · http_with_jpegs.cap.gz

```
> Frame 1: 62 bytes on wire (496 bits), 62 bytes captured (496 bits)
v Ethernet II, Src: SMCNetwo_22:5a:03 (00:04:e2:22:5a:03), Dst: Kye_20:6c:df (00:c0:df:20:6c:df)
    > Destination: Kye_20:6c:df (00:c0:df:20:6c:df)
    > Source: SMCNetwo_22:5a:03 (00:04:e2:22:5a:03)
      Type: IPv4 (0x0800)
> Internet Protocol Version 4, Src: 10.1.1.101 (10.1.1.101), Dst: 10.1.1.1 (10.1.1.1)
v Transmission Control Protocol, Src Port: phonex-port (3177), Dst Port: http (80), Seq: 0, Len: 0
      Source Port: phonex-port (3177)
      Destination Port: http (80)
      [Stream index: 0]
      [TCP Segment Len: 0]
      Sequence number: 0    (relative sequence number)
      Sequence number (raw): 882639998
      [Next sequence number: 1    (relative sequence number)]
      Acknowledgment number: 0
      Acknowledgment number (raw): 0
      0111 .... = Header Length: 28 bytes (7)
    > Flags: 0x002 (SYN)
      Window size value: 0
      [Calculated window size: 0]
      Checksum: 0x26e5 [unverified]
      [Checksum Status: Unverified]
      Urgent pointer: 0
    > Options: (8 bytes), Maximum segment size, No-Operation (NOP), No-Operation (NOP), SACK permitted
    > [Timestamps]
```

Wireshark · Conversations · http_with_jpegs.cap.gz

Ethernet · 2 | IPv4 · 3 | IPv6 | TCP · 19 | UDP

Address A	Address B	Packets	Bytes	Packets A → B	Bytes A → B	Packets B → A	Bytes B → A	Rel Start	Duration	Bits/s A → B	Bits/s B → A
10.1.1.1	10.1.1.101	342	264 k	204	250 k	138	13 k	0.000000	11.3833	176 k	
10.1.1.101	209.225.11.237	14	3724	7	1379	7	2345	0.121783	1.3282	8305	
10.1.1.101	209.225.0.6	127	50 k	61	24 k	66	26 k	1.199417	3.2976	59 k	

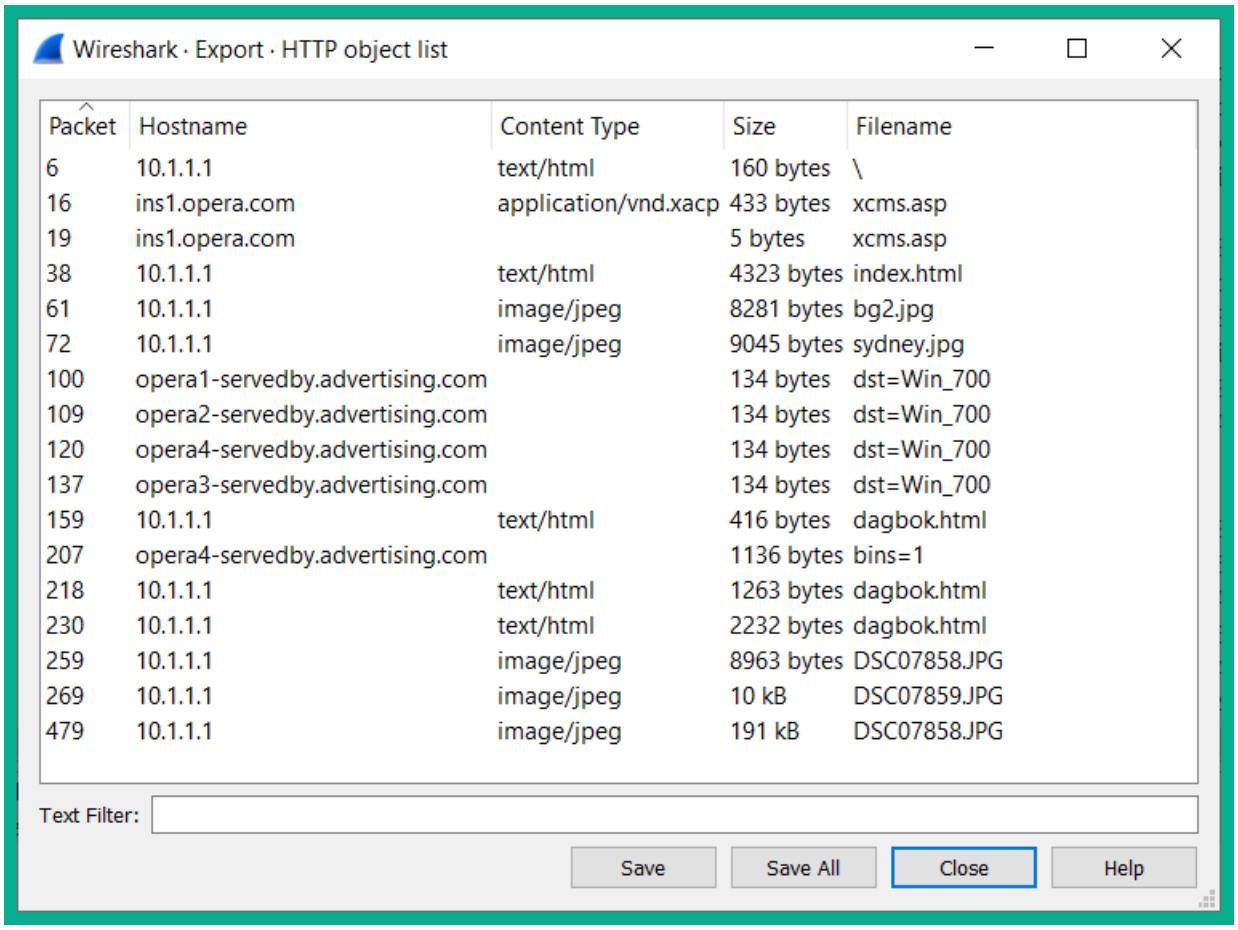
Wireshark · Export · HTTP object list
Packet
Hostname
Content Type
Size
Filename
6 10.1.1.1 text/html 160 bytes \
16 ins1.opera.com application/vnd.xacp 433 bytes xcms.asp
19 ins1.opera.com 5 bytes xcms.asp
38 10.1.1.1 text/html 4323 bytes index.html
61 10.1.1.1 image/jpeg 8281 bytes bg2.jpg
72 10.1.1.1 image/jpeg 9045 bytes sydney.jpg
100 opera1-servedby.advertising.com 134 bytes dst=Win_700
109 opera2-servedby.advertising.com 134 bytes dst=Win_700
120 opera4-servedby.advertising.com 134 bytes dst=Win_700
137 opera3-servedby.advertising.com 134 bytes dst=Win_700
159 10.1.1.1 text/html 416 bytes dagbok.html
207 opera4-servedby.advertising.com 1136 bytes bins=1
218 10.1.1.1 text/html 1263 bytes dagbok.html
230 10.1.1.1 text/html 2232 bytes dagbok.html
259 10.1.1.1 image/jpeg 8963 bytes DSC07858.JPG
269 10.1.1.1 image/jpeg 10 kB DSC07859.JPG
479 10.1.1.1 image/jpeg 191 kB DSC07858.JPG
Text Filter:
Save
Save All
Close
Help

Chapter 12: Configuring Device Access Control and VPNs

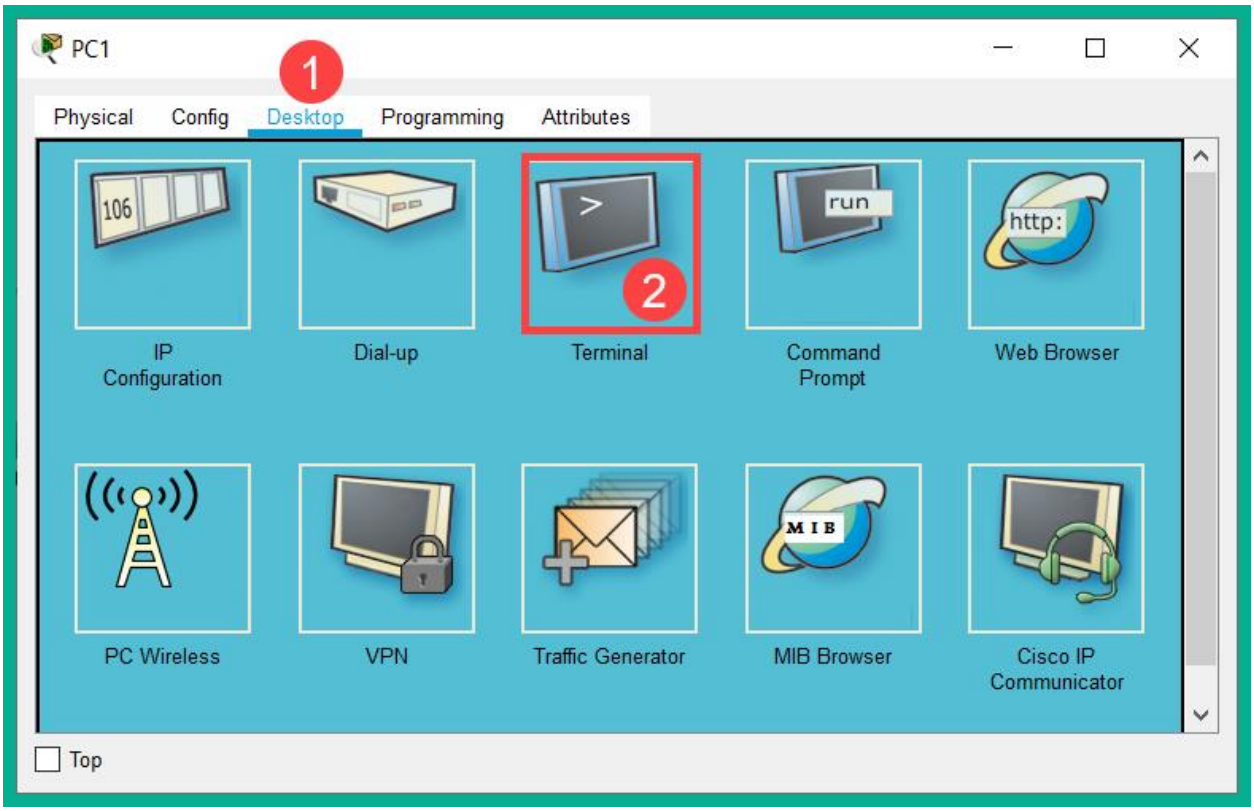

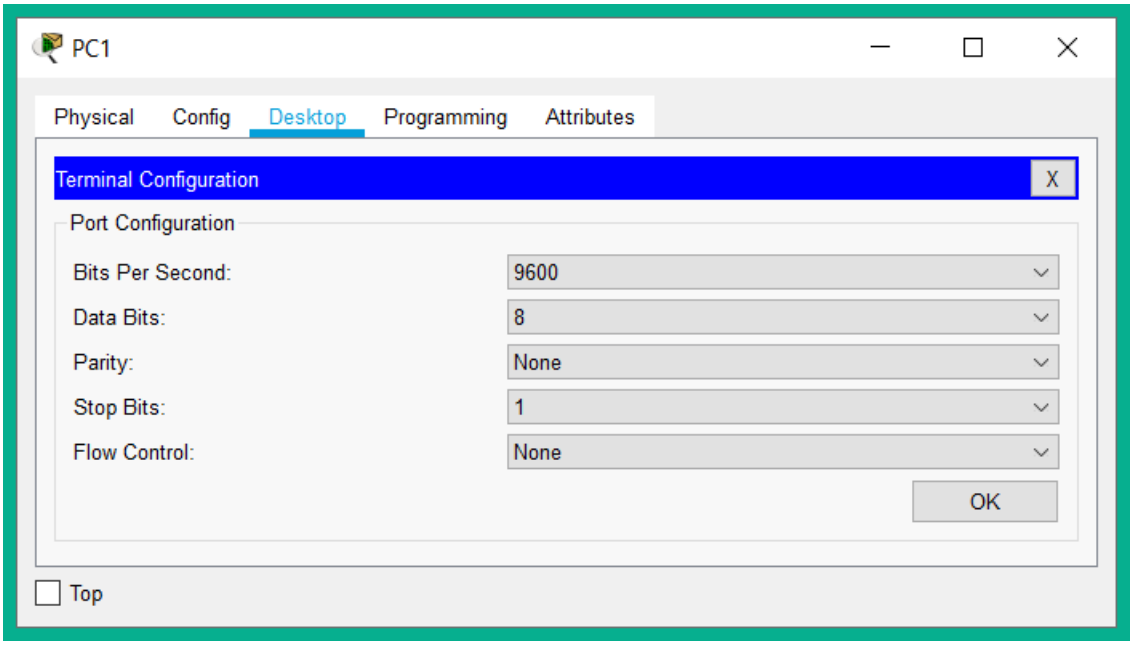


```
        --- System Configuration Dialog ---

Would you like to enter the initial configuration dialog? [yes/no]: no

Press RETURN to get started!

Router>
```

```
Router>show users
    Line       User       Host(s)              Idle       Location
*   0 con 0                idle                 00:00:00

  Interface    User               Mode         Idle     Peer Address
Router>
```

```
Router>show privilege
Current privilege level is 1
Router>
```

```
!
line con 0
!
line aux 0
!
line vty 0 4
 login
!
```

```
Router#configure terminal
Enter configuration commands, one per line.  End with CNTL/Z.
Router(config)#line console 0
Router(config-line)#password consolepass
Router(config-line)#login
Router(config-line)#exit
```

```
Press RETURN to get started!


User Access Verification

Password:

Router>
```

Password is invisible being entered on the CLI

```
Router#show running-config | section line
line con 0
 password consolepass
 login
```

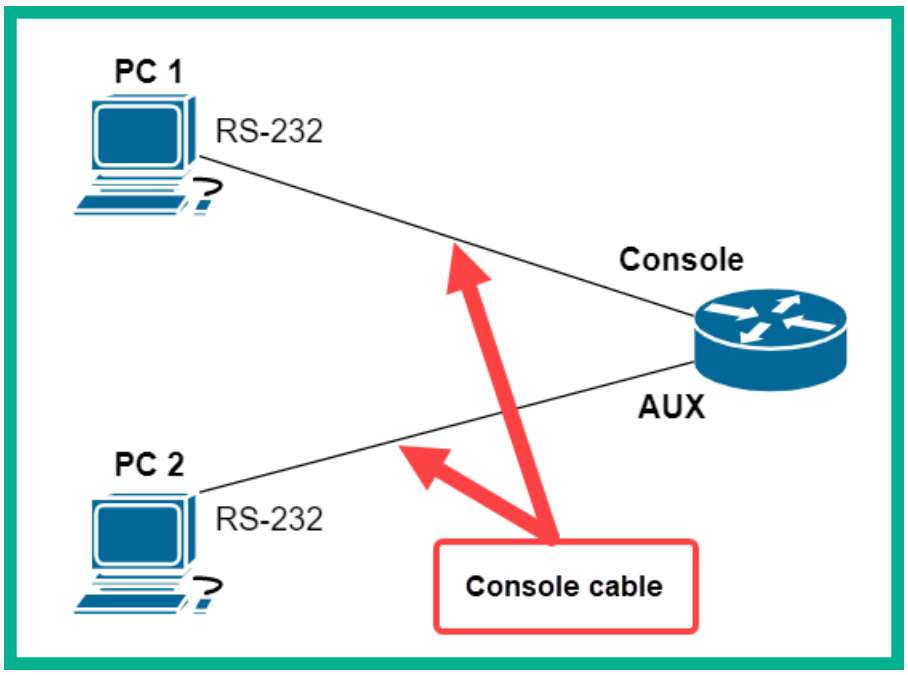


```
Router>show users
    Line       User       Host(s)              Idle       Location
   0 con 0                 idle                 00:00:12
*  1 aux 0                 idle                 00:00:00

  Interface    User               Mode         Idle     Peer Address
Router>
```

```
Router>enable
% No password set.
Router>
```

```
User Access Verification

Password:

Router>show users
    Line       User       Host(s)              Idle       Location
*  1 aux 0                 idle                 00:00:00

  Interface    User               Mode         Idle     Peer Address
Router>
```

Password is invisible when being entered on CLI

```
Router#show running-config | section line
line con 0
 password consolepass
 login
line aux 0
 password auxpass
 login
line vty 0 4
 login
Router#
```

AUX configurations

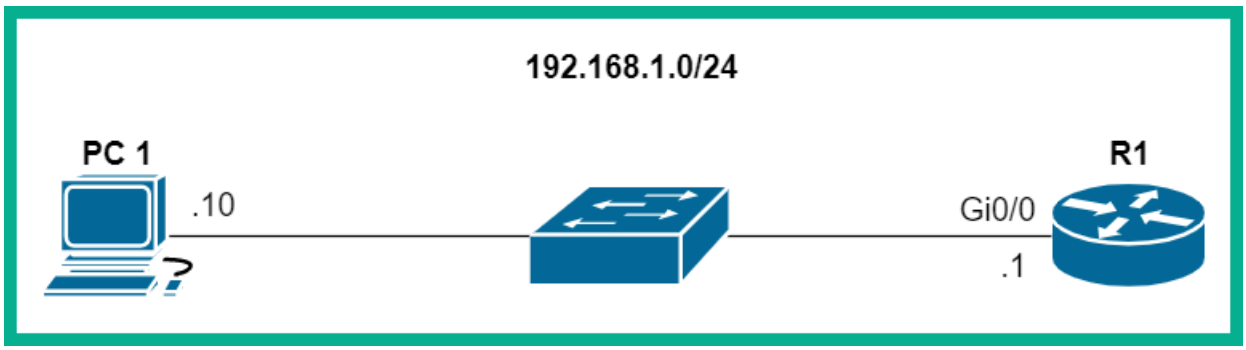


```
Router#show running-config | section line
line con 0
 password consolepass
 login
line aux 0
 password auxpass
 login
line vty 0 4
 login
Router#
```

Authentication is enabled by default

```
Router#show running-config | section line
line vty 0 4
 password telnetpass
 login
line vty 5 15
 password telnetpass
 login
Router#
```

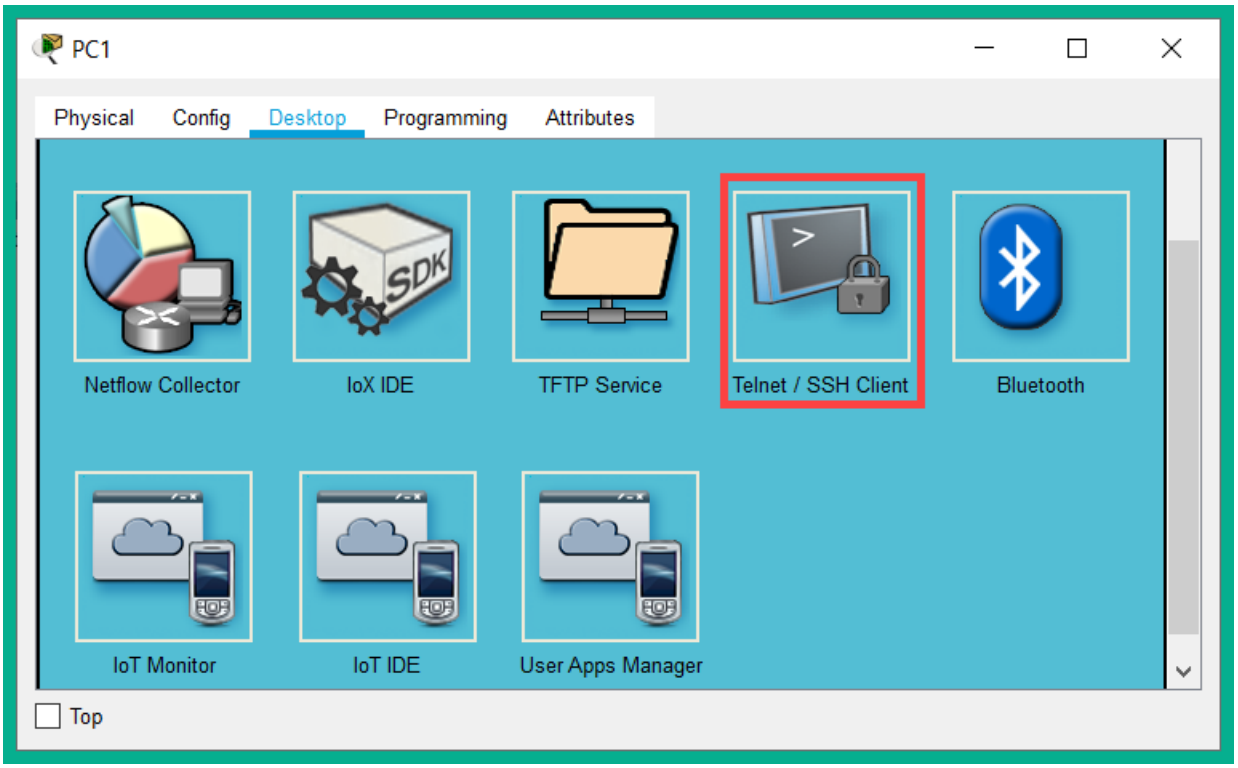

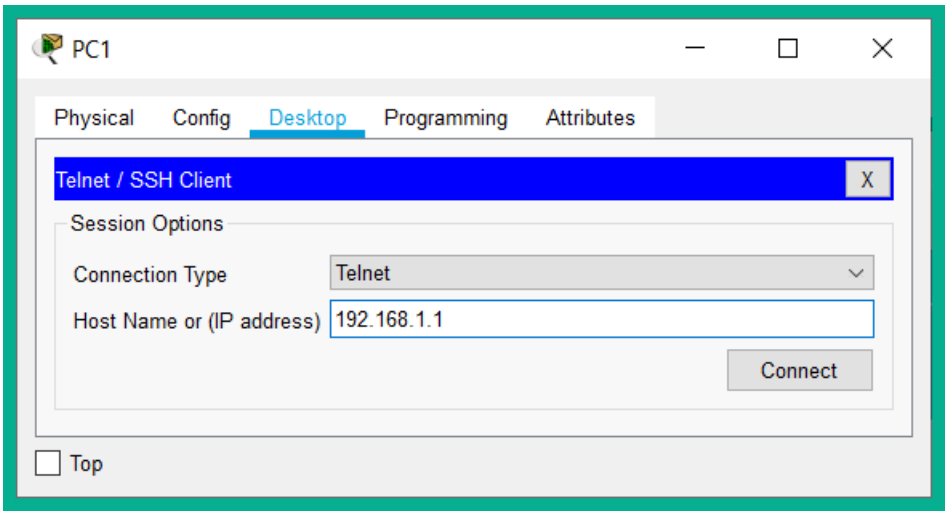
PC1
Physical
Config
Desktop
Programming
Attributes
Telnet / SSH Client
X
Session Options
Connection Type
Telnet
Host Name or (IP address)
192.168.1.1
Connect
Top

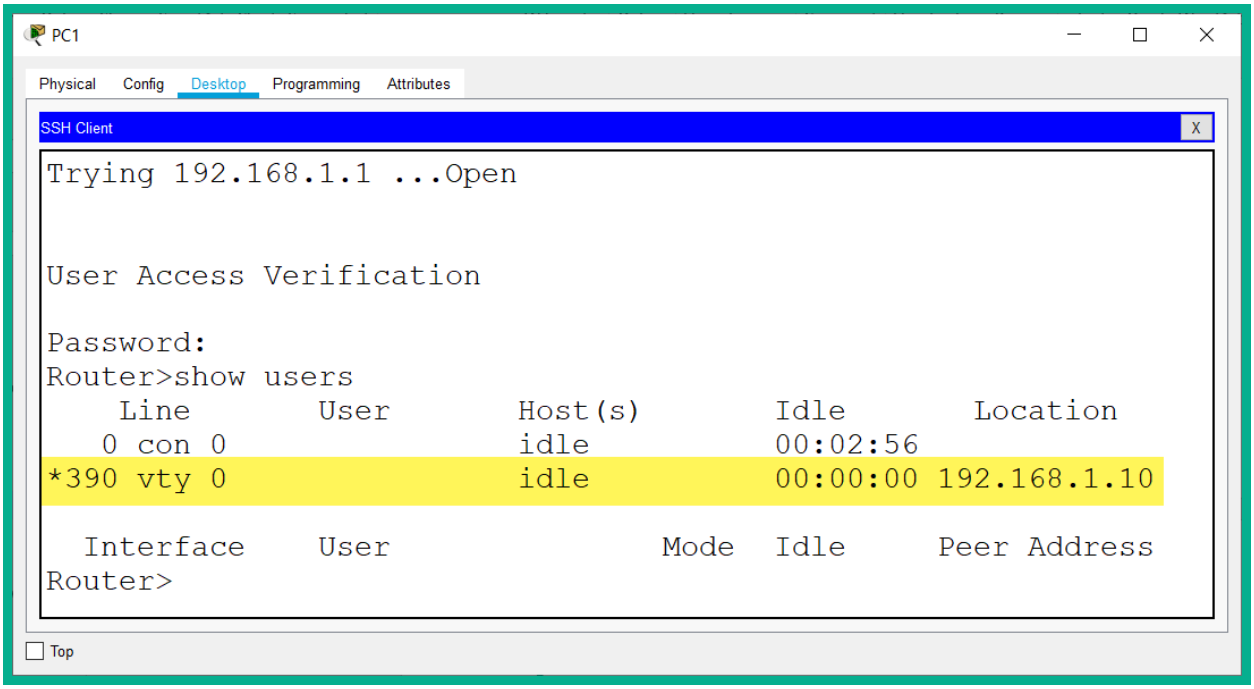
PC1
Physical
Config
Desktop
Programming
Attributes
SSH Client
X
Trying 192.168.1.1 ...Open
User Access Verification
Password:
Router>show users
Line User Host(s) Idle Location
0 con 0 idle 00:02:56
*390 vty 0 idle 00:00:00 192.168.1.10
Interface User Mode Idle Peer Address
Router>
Top

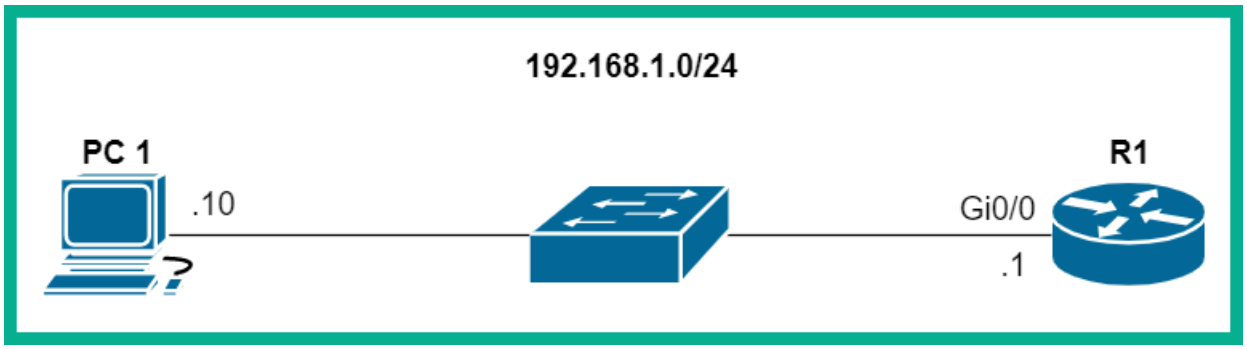
192.168.1.0/24
PC 1
.10
R1
Gi0/0
.1

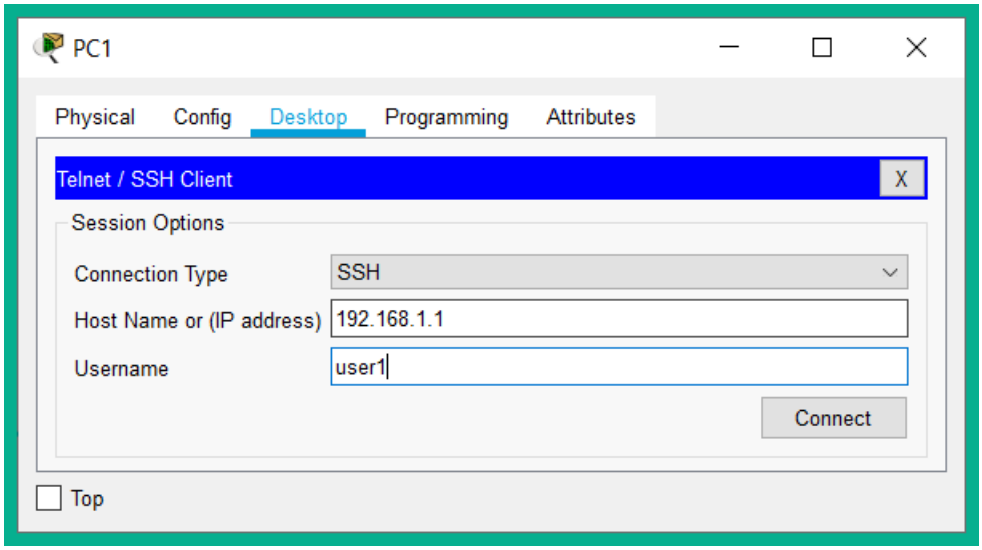

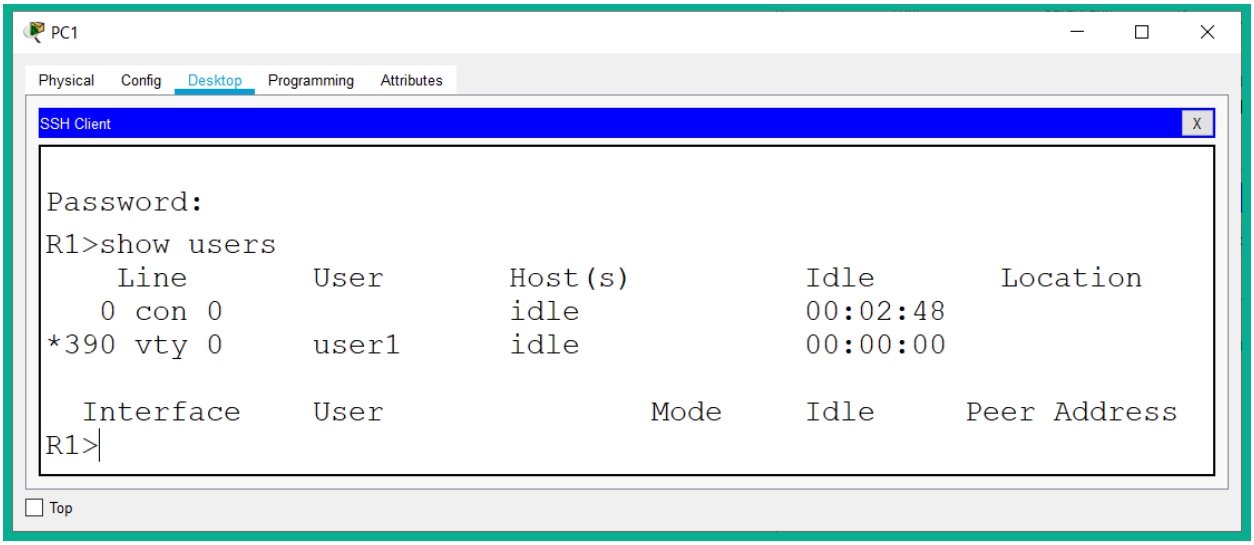


```
R1#show ip ssh
SSH Enabled - version 2.0
Authentication timeout: 120 secs; Authentication retries: 3
R1#
R1#show ssh
Connection      Version Mode Encryption  Hmac State            Username
389             1.99    IN   aes128-cbc      hmac-sha1     Session Started         user1
389             1.99    OUT  aes128-cbc      hmac-sha1     Session Started   user1
%No SSHv1 server connections running.
R1#
```

```
R1#show running-config
Building configuration...

Current configuration : 998 bytes
!
version 15.1
no service timestamps log datetime msec
no service timestamps debug datetime msec
no service password-encryption
!
hostname R1
!
!
!
enable password cisco123
!
```

Password is in plaintext

```
R1#show running-config
Building configuration...

Current configuration : 1045 bytes
!
hostname R1
!
!
!
enable secret 5 $1$mERr$nU5A2OzzVK4SUlSP717zP.
enable password cisco123
!
```

Password is encrypted

```
R1(config)#no enable password
R1(config)#
R1(config)#do show running-config
Building configuration...

Current configuration : 1020 bytes
!
version 15.1
no service password-encryption
!
hostname R1
!
!
!
enable secret 5 $1$mERr$nU5A2OzzVK4SUlSP717zP.
!
!
```

The "*enable password*" removed.

```
Router(config)#enable algorithm-type ?
  md5     Encode the password using the MD5 algorithm
  scrypt  Encode the password using the SCRYPT hashing algorithm
  sha256  Encode the password using the PBKDF2 hashing algorithm

Router(config)#enable algorithm-type scrypt ?
  secret  Assign the privileged level secret (MAX of 25 characters)

Router(config)#enable algorithm-type scrypt secret ?
  LINE    The UNENCRYPTED (cleartext) 'enable' secret
  level   Set exec level password

Router(config)#enable algorithm-type scrypt secret level9password
Router(config)#
```

1 2 3 4

```
Router#show running-config
Building configuration...

Current configuration : 3228 bytes
!
! Last configuration change at 15:27:08 UTC Tue May 26 2020
!
version 15.7
service timestamps debug datetime msec
service timestamps log datetime msec
no service password-encryption
!
hostname Router
!
boot-start-marker
boot-end-marker
!
!
enable secret 9 $9$h5kKOOlYugj8L9$jHWp1AnEkO8zVCPzu2.DOKPI8O6LRxSxpLCGeO1w5EA
!
```

```
R1#show running-config | section line
line con 0
 password consolepass
 login
line aux 0
 password auxpass
 login
line vty 0 4
 exec-timeout 2 0
 login local
 transport input ssh
```

Passwords are in plaintext

```
R1#show running-config | section line
line con 0
 password 7 082243401A160912020A1F17
 login
line aux 0
 password 7 0820595619181604
 login
R1#
```

Passwords are encrypted

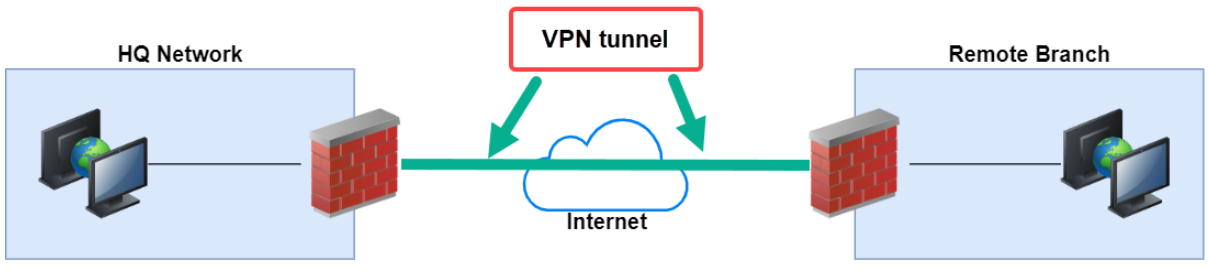

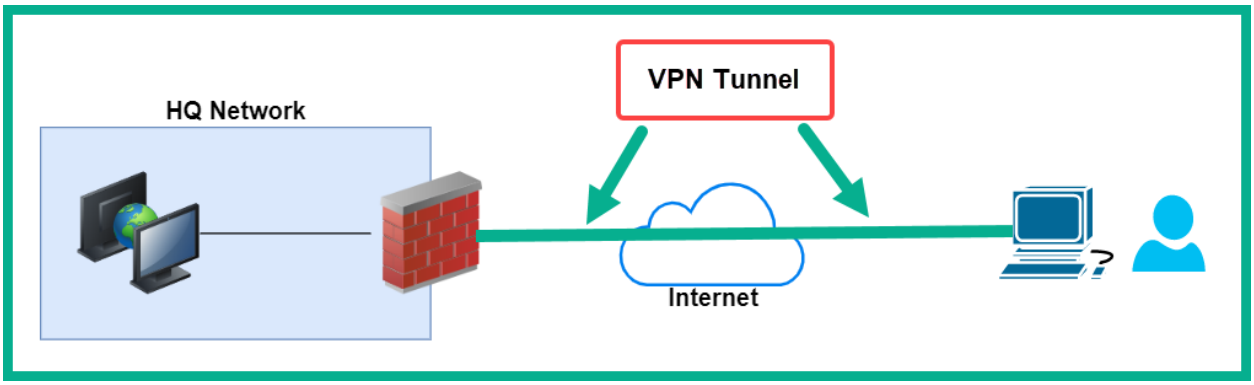

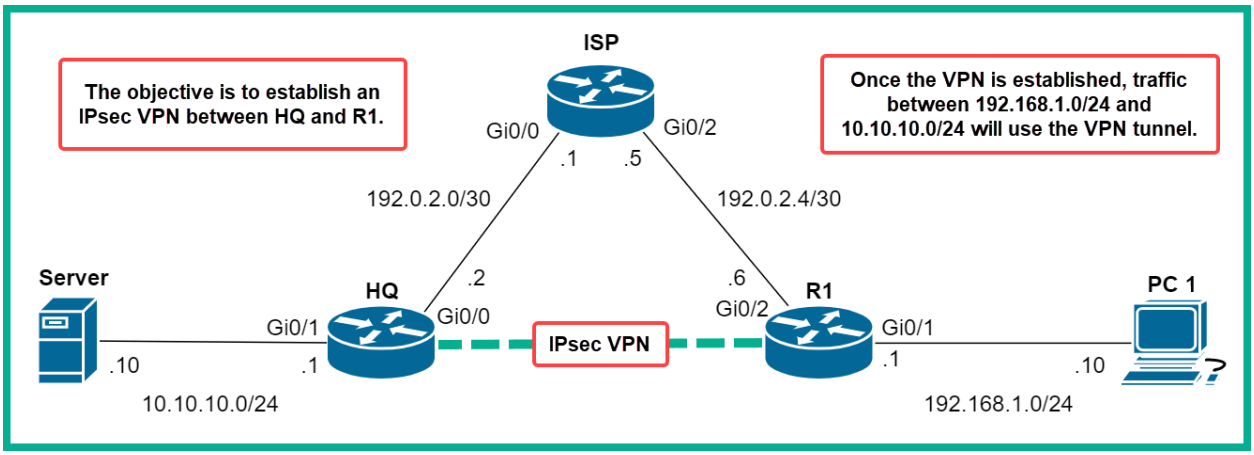

Device	Interface	IP Address	Subnet Mask	Default Gateway
PC 1	Fa0	192.168.1.10	255.255.255.0	192.168.1.1
Server	Fa0	10.10.10.10	255.255.255.0	10.10.10.1
R1	Gi0/1	192.168.1.1	255.255.255.0	n/a
	Gi0/2	192.0.2.6	255.255.255.252	n/a
HQ	Gi0/1	10.10.10.1	255.255.255.0	n/a
	Gi0/0	192.0.2.2	255.255.255.252	n/a
ISP	Gi0/0	192.0.2.1	255.255.255.252	n/a
	Gi0/2	192.0.2.5	255.255.255.252	n/a

```
-----------------------------------------------------------------
Technology    Technology-package          Technology-package
              Current       Type          Next reboot
-----------------------------------------------------------------
ipbase        ipbasek9      Permanent     ipbasek9
security      securityk9    Evaluation    securityk9
uc            disable       None          None
data          disable       None          None

Configuration register is 0x2102
```

```
C:\>tracert 10.10.10.10

Tracing route to 10.10.10.10 over a maximum of 30
hops:

  1    1 ms       0 ms       0 ms       192.168.1.1
  2    11 ms      0 ms       10 ms      192.0.2.2
  3    11 ms      13 ms      0 ms       10.10.10.10

Trace complete.
```

```
R1#show crypto isakmp sa
IPv4 Crypto ISAKMP SA
dst             src             state      conn-id slot status
192.0.2.2       192.0.2.6       QM_IDLE       1076    0 ACTIVE
```

```
R1#show crypto ipsec sa

interface: GigabitEthernet0/2
    Crypto map tag: IPsec-Map, local addr 192.0.2.6

   protected vrf: (none)
   local  ident (addr/mask/prot/port): (192.168.1.0/255.255.255.0/0/0)
   remote  ident (addr/mask/prot/port): (10.10.10.0/255.255.255.0/0/0)
   current_peer 192.0.2.2 port 500
    PERMIT, flags={origin_is_acl,}
   #pkts encaps: 17, #pkts encrypt: 17, #pkts digest: 0
   #pkts decaps: 14, #pkts decrypt: 14, #pkts verify: 0
   #pkts compressed: 0, #pkts decompressed: 0
   #pkts not compressed: 0, #pkts compr. failed: 0
   #pkts not decompressed: 0, #pkts decompress failed: 0
   #send errors 1, #recv errors 0
```

```
R1#show crypto map
Crypto Map IPsec-Map 5 ipsec-isakmp
        Peer = 192.0.2.2
        Extended IP access list VPN-Traffic
            access-list VPN-Traffic permit ip 192.168.1.0 0.0.0.255 10.10.10.0 0.0.0.255
        Current peer: 192.0.2.2
        Security association lifetime: 4608000 kilobytes/3600 seconds
        PFS (Y/N): N
        Transform sets={
                IPsec-VPN,
        }
        Interfaces using crypto map IPsec-Map:
                GigabitEthernet0/2
```

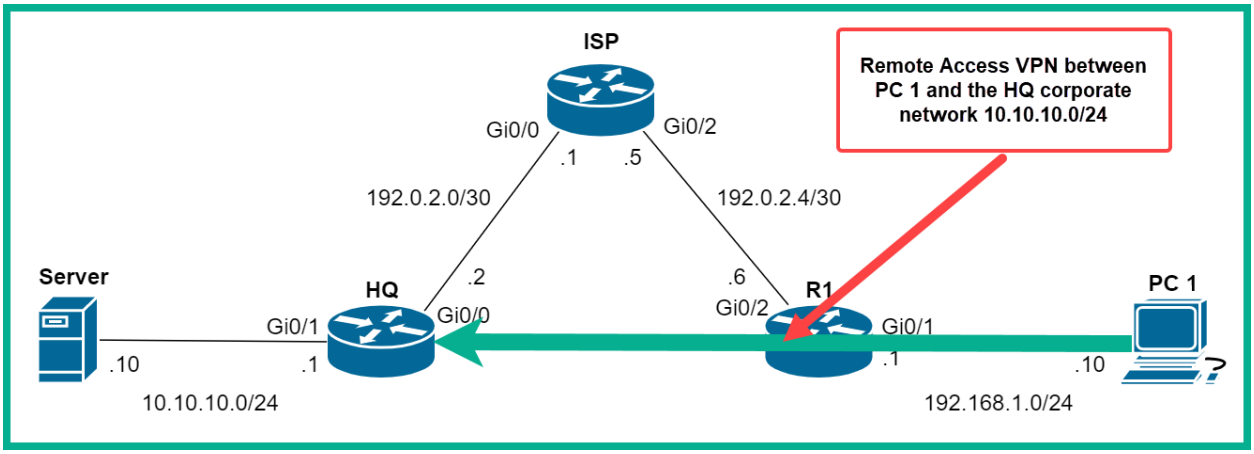

Device	Interface	IP Address	Subnet Mask	Default Gateway
PC 1	Fa0	192.168.1.10	255.255.255.0	192.168.1.1
Server	Fa0	10.10.10.10	255.255.255.0	10.10.10.1
R1	Gi0/1	192.168.1.1	255.255.255.0	n/a
	Gi0/2	192.0.2.6	255.255.255.252	n/a
HQ	Gi0/1	10.10.10.1	255.255.255.0	n/a
	Gi0/0	192.0.2.2	255.255.255.252	n/a
ISP	Gi0/0	192.0.2.1	255.255.255.252	n/a
	Gi0/2	192.0.2.5	255.255.255.252	n/a

```
------------------------------------------------------------------
Technology    Technology-package          Technology-package
              Current       Type          Next reboot
------------------------------------------------------------------
ipbase        ipbasek9      Permanent     ipbasek9
security      securityk9    Evaluation    securityk9
uc            disable       None          None
data          disable       None          None

Configuration register is 0x2102
```

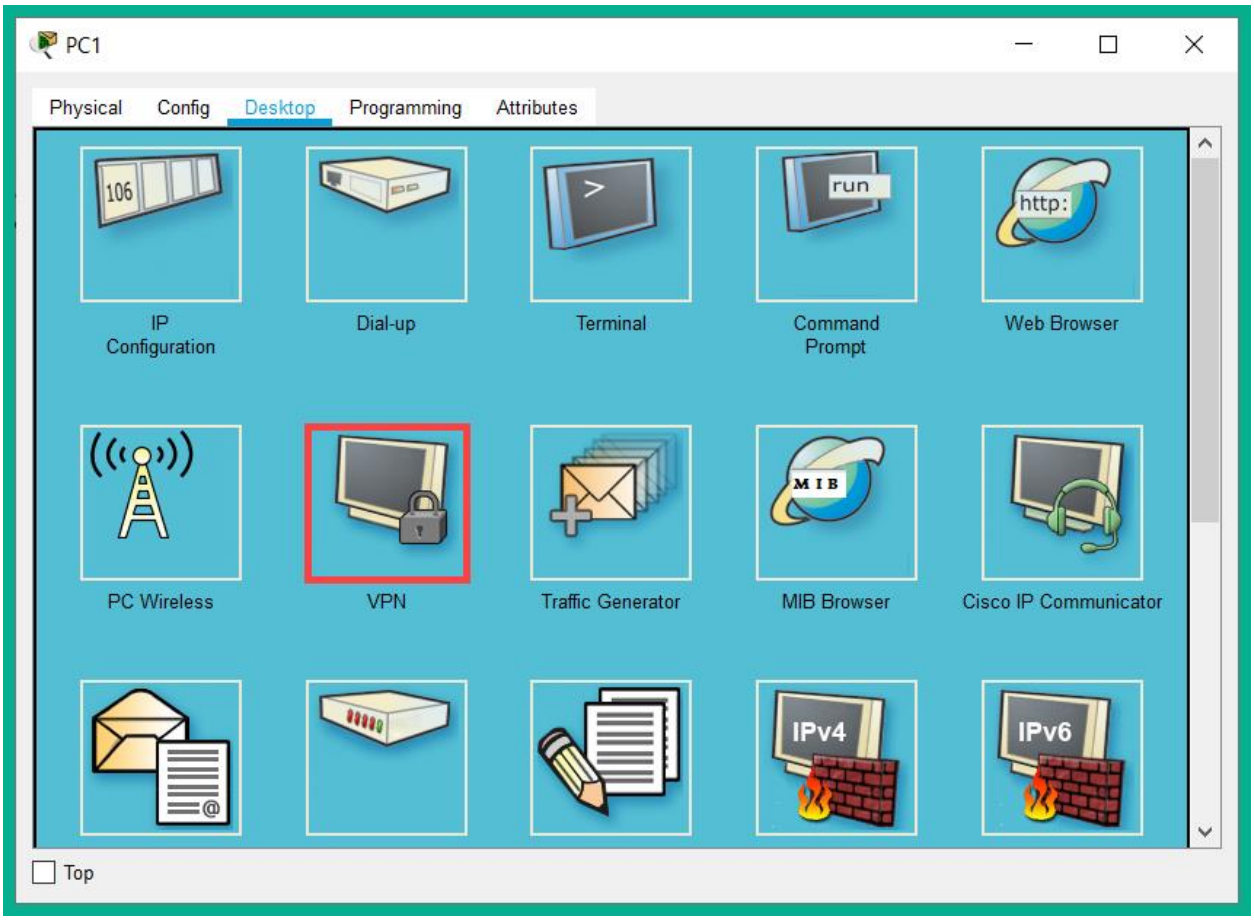
PC1
Physical
Config
Desktop
Programming
Attributes
IP Configuration
Dial-up
Terminal
Command Prompt
Web Browser
PC Wireless
VPN
Traffic Generator
MIB Browser
Cisco IP Communicator
IPv4
IPv6
Top

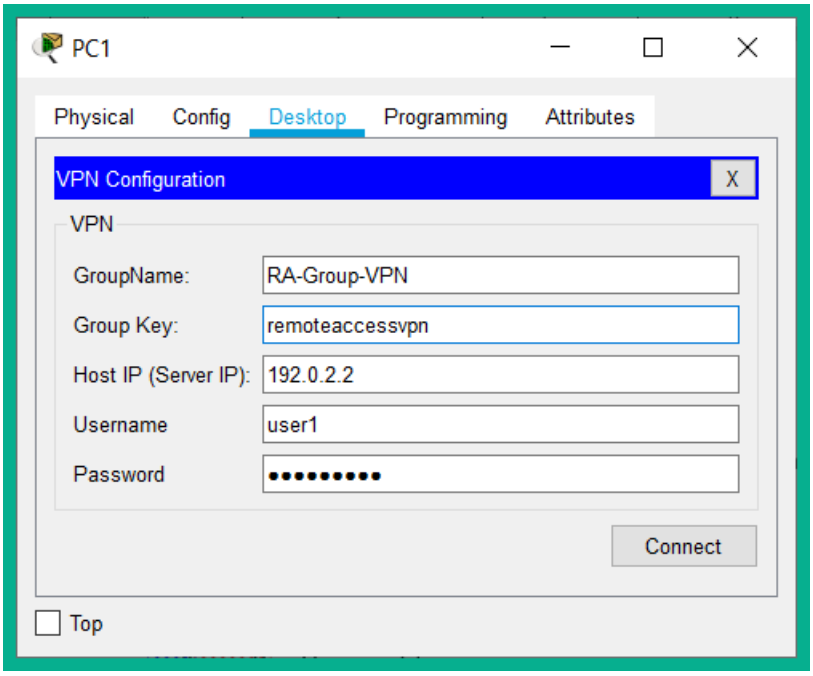
PC1
Physical
Config
Desktop
Programming
Attributes
VPN Configuration
X
VPN
GroupName:
RA-Group-VPN
Group Key:
remoteaccessvpn
Host IP (Server IP):
192.0.2.2
Username
user1
Password
Connect
Top

```
C:\>ipconfig /all

FastEthernet0 Connection:(default port)

   Connection-specific DNS Suffix..:
   Physical Address.................: 0010.11AD.54B7
   Link-local IPv6 Address.........: FE80::210:11FF:FEAD:54B7
   IP Address.......................: 192.168.1.10
   Subnet Mask.....................: 255.255.255.0
   Default Gateway.................: 192.168.1.1
   DNS Servers.....................: 0.0.0.0
   DHCP Servers....................: 0.0.0.0
   DHCPv6 Client DUID..............: 00-01-00-01-AB-C8-B7-7D-00-10-11-AD-54-B7

   Tunnel Interface IP Address.....: 10.10.10.100
```

```
C:\>ping 10.10.10.10

Pinging 10.10.10.10 with 32 bytes of data:

Reply from 10.10.10.10: bytes=32 time=1ms TTL=127
Reply from 10.10.10.10: bytes=32 time=1ms TTL=127
Reply from 10.10.10.10: bytes=32 time=1ms TTL=127
Reply from 10.10.10.10: bytes=32 time<1ms TTL=127

Ping statistics for 10.10.10.10:
    Packets: Sent = 4, Received = 4, Lost = 0 (0% loss),
Approximate round trip times in milli-seconds:
    Minimum = 0ms, Maximum = 1ms, Average = 0ms
```

```
C:\>tracert 10.10.10.10

Tracing route to 10.10.10.10 over a maximum of 30 hops:

  1    0 ms       0 ms       0 ms       192.0.2.2
  2    0 ms       0 ms       0 ms       10.10.10.10

Trace complete.
```

Chapter 13: Implementing Access Control Lists

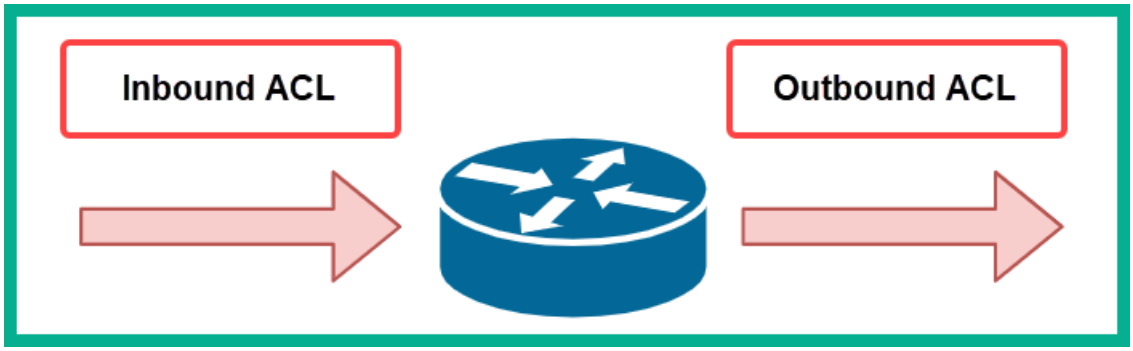


```
HQ#show ip interface GigabitEthernet 0/2
GigabitEthernet0/2 is up, line protocol is up (connected)
  Internet address is 172.16.1.1/24
  Broadcast address is 255.255.255.255
  Address determined by setup command
  MTU is 1500 bytes
  Helper address is not set
  Directed broadcast forwarding is disabled
  Outgoing access list is 10
  Inbound  access list is Restrict-FTP
  Proxy ARP is enabled
  Security level is default
```

```
HQ#show access-lists 10
Standard IP access list 10
    permit host 192.168.1.10
    permit 10.1.1.0 0.0.0.255

HQ#
```

```
HQ#show access-lists Restrict-FTP
Extended IP access list Restrict-FTP
    deny tcp host 172.16.1.10 any eq ftp
    permit ip any any

HQ#
```

```
HQ#show access-lists
Standard IP access list 10
    10 permit host 192.168.1.10
    20 permit 10.1.1.0 0.0.0.255
Standard IP access list INT_Access
    10 permit 172.16.1.0 0.0.0.255
Standard IP access list Secure-VTY
    10 permit host 172.16.1.10
    20 deny any
Extended IP access list Restrict-FTP
    10 deny tcp host 172.16.1.10 any eq ftp
    20 permit ip any any
HQ#
```

```
HQ#show access-lists
Extended IP access list Restrict-FTP
    10 deny tcp host 172.16.1.10 any eq ftp
    20 permit ip any any
HQ#
```

	Decimal	Binary			
IP Address	192.168.1.0	11000000	10101000	00000001	00000000
Wildcard	0.0.0.255	00000000	00000000	11111111	11111111
Result Address	192.168.0.0	11000000	10101000	00000000	00000000

	Decimal	Binary			
IP Address	172.16.10.1	10101100	00010000	00001010	00000001
Wildcard	0.0.0.0	00000000	00000000	00000000	00000000
Result Address	172.16.10.1	10101100	00010000	00001010	00000001

Broadcast Address	255	255	255	255
Subnet Mask	− 255	255	255	0
Wildcard Mask	0	0	0	255

Broadcast Address	255	255	255	255
Subnet Mask	255	255	255	240
Wildcard Mask	0	0	0	15

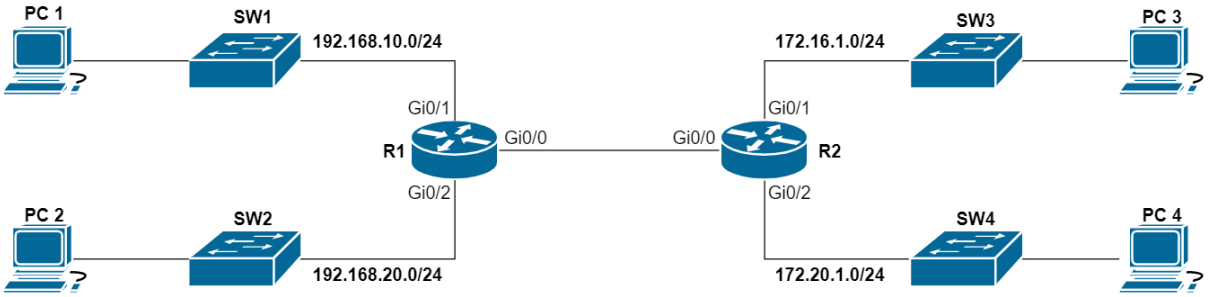


```
Router(config)#access-list 20 deny 192.168.20.0 0.0.0.255
Router(config)#exit
Router#show access-lists
Standard IP access list 20
    10 deny 192.168.20.0 0.0.0.255

Router#conf t
Router(config)#no access-list 20
Router(config)#^Z
Router#show access-lists
Router#
```

1 2 3 4

Removing ACL 20

```
Router(config)#access-list 20 deny 192.168.20.0 0.0.0.255
Router(config)#interface GigabitEthernet 0/1
Router(config-if)#ip access-group 20 in
Router(config-if)#exit
```

```
Router(config)#ip access-list standard Named-STD-ACL
Router(config-std-nacl)#permit 192.168.10.0 0.0.0.255
Router(config-std-nacl)#exit
Router(config)#interface GigabitEthernet 0/2
Router(config-if)#ip access-group Named-STD-ACL in
Router(config-if)#exit
```

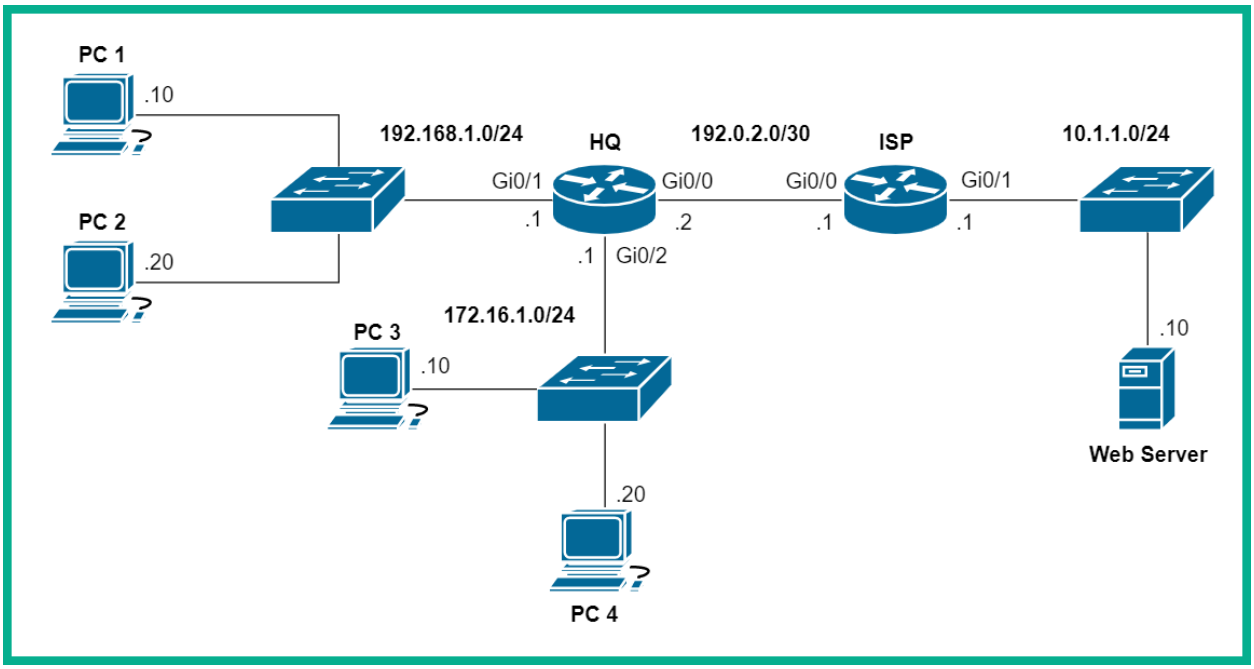

Device	Interface	IP Address	Subnet Mask	Default Gateway
PC 1	Fa0	192.168.1.10	255.255.255.0	192.168.1.1
PC 2	Fa0	192.168.1.20	255.255.255.0	192.168.1.1
PC 3	Fa0	172.16.1.10	255.255.255.0	172.16.1.1
PC 4	Fa0	172.16.1.20	255.255.255.0	172.16.1.1
Server	Fa0	10.1.1.10	255.255.255.0	10.1.1.1
HQ	Gi0/0	192.0.2.2	255.255.255.252	
	Gi0/1	192.168.1.1	255.255.255.0	
	Gi0/2	172.16.1.1	255.255.255.0	
ISP	Gi0/0	192.0.2.1	255.255.255.252	
	Gi0/1	10.1.1.1	255.255.255.0	

```
HQ#show access-lists
Standard IP access list 10
    10 permit host 192.168.1.10
    20 permit 10.1.1.0 0.0.0.255

HQ#
```

```
HQ#show ip interface gigabitethernet 0/2
GigabitEthernet0/2 is up, line protocol is up (connected)
  Internet address is 172.16.1.1/24
  Broadcast address is 255.255.255.255
  Address determined by setup command
  MTU is 1500 bytes
  Helper address is not set
  Directed broadcast forwarding is disabled
  Outgoing access list is 10
  Inbound  access list is not set
  Proxy ARP is enabled
```


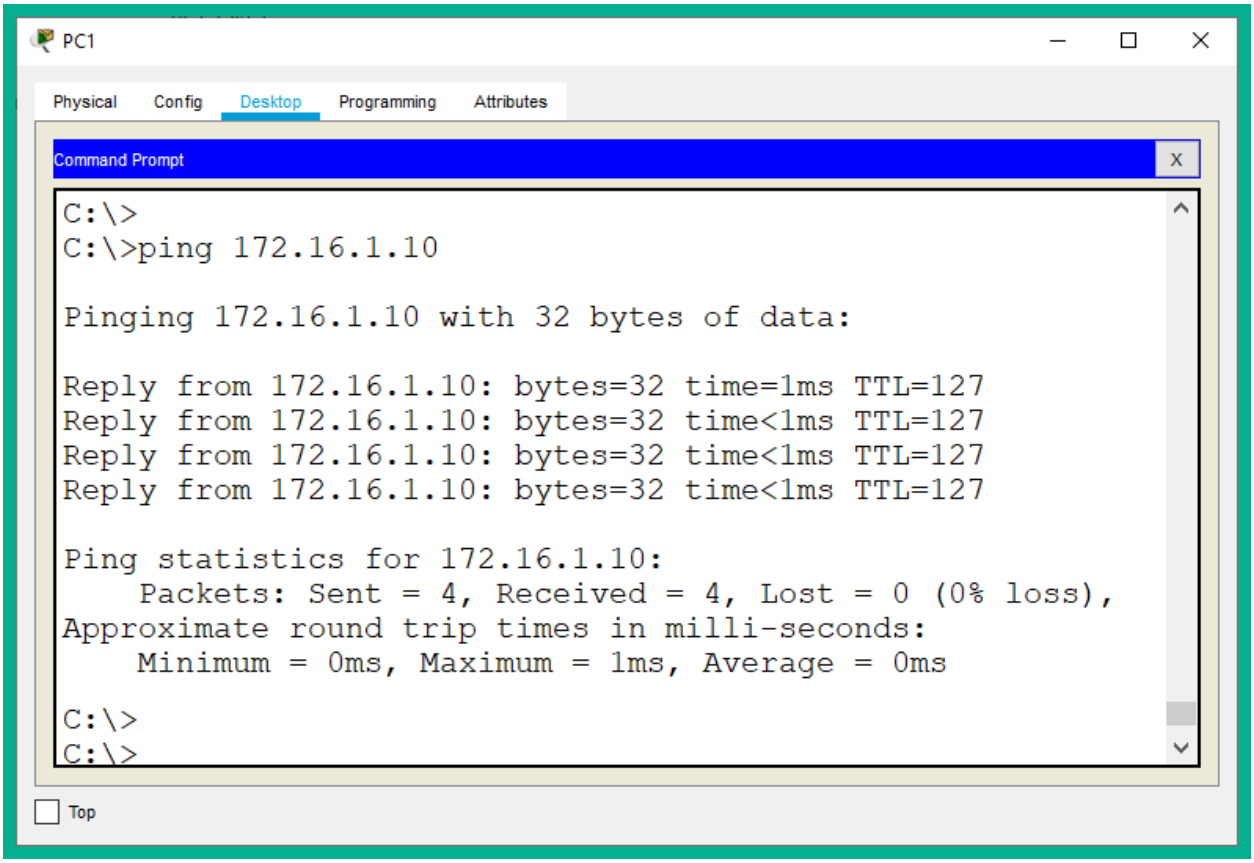

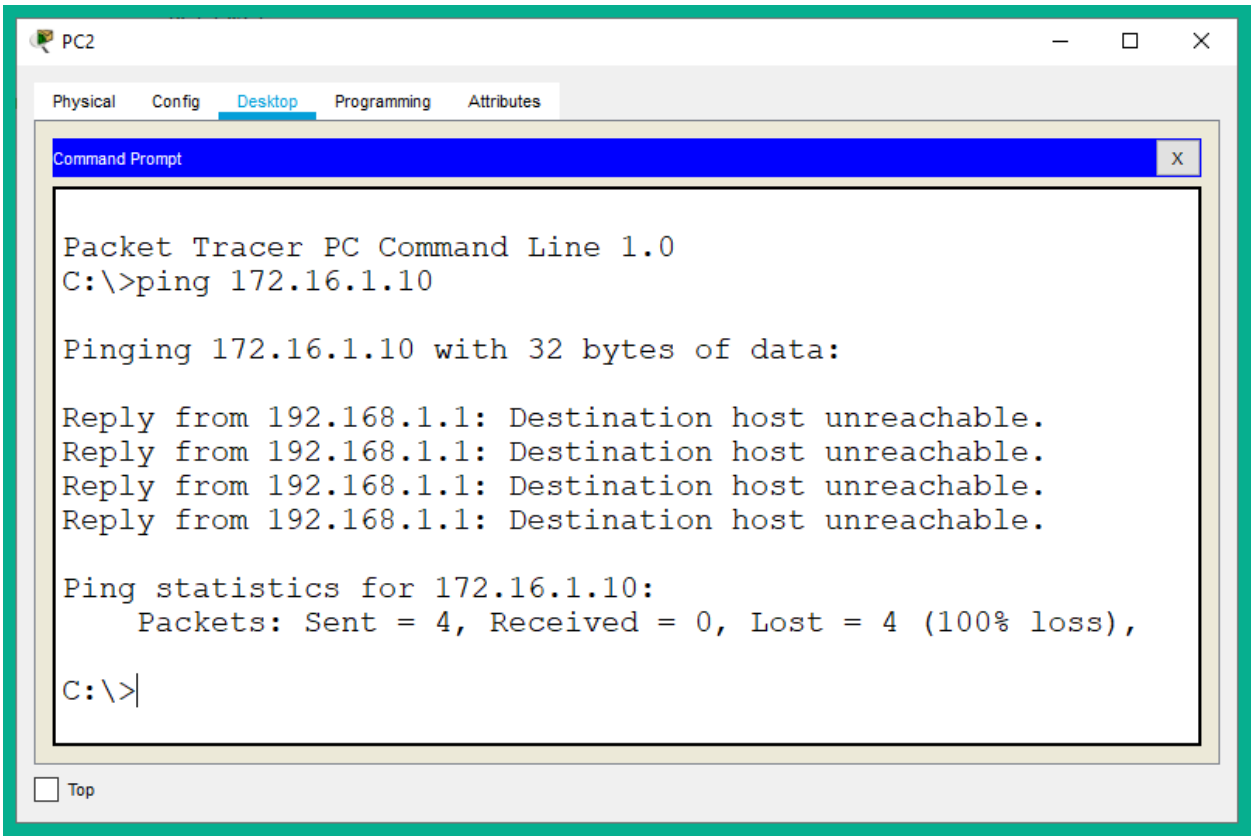


```
HQ#show access-lists
Standard IP access list 10
    10 permit host 192.168.1.10 (4 match(es))
    20 permit 10.1.1.0 0.0.0.255

HQ#
```

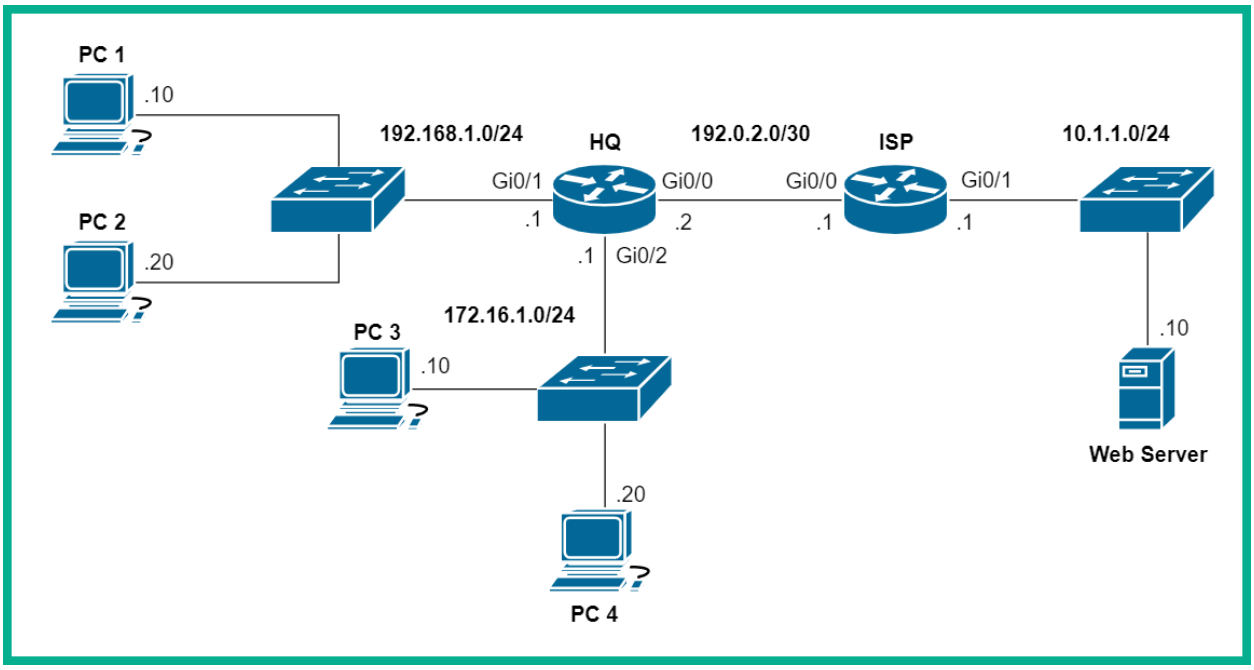
PC 1
.10
PC 2
.20
192.168.1.0/24
HQ
Gi0/1
.1
Gi0/0
.2
192.0.2.0/30
Gi0/0
.1
ISP
Gi0/1
.1
10.1.1.0/24
.10
Web Server
.1
Gi0/2
172.16.1.0/24
PC 3
.10
.20
PC 4

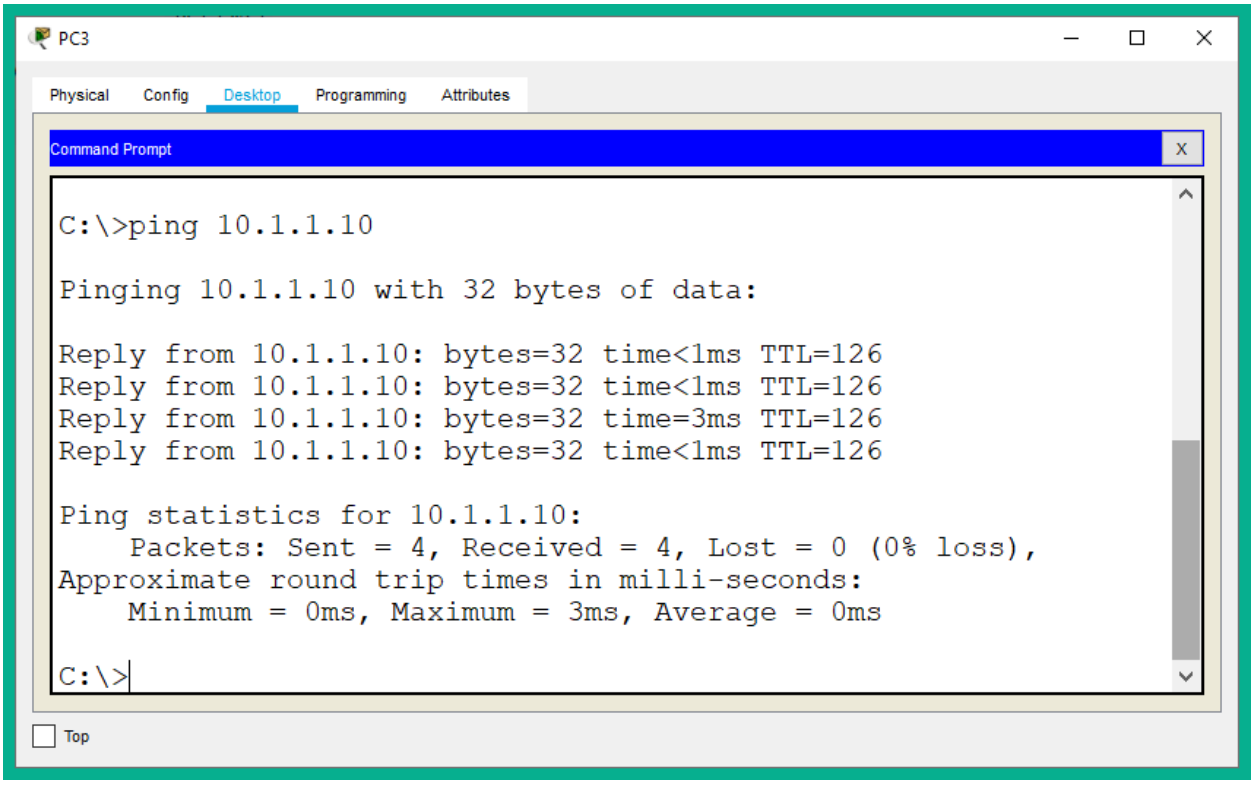
PC3
Physical
Config
Desktop
Programming
Attributes
Command Prompt
C:\>ping 10.1.1.10
Pinging 10.1.1.10 with 32 bytes of data:
Reply from 10.1.1.10: bytes=32 time<1ms TTL=126
Reply from 10.1.1.10: bytes=32 time<1ms TTL=126
Reply from 10.1.1.10: bytes=32 time=3ms TTL=126
Reply from 10.1.1.10: bytes=32 time<1ms TTL=126
Ping statistics for 10.1.1.10:
Packets: Sent = 4, Received = 4, Lost = 0 (0% loss),
Approximate round trip times in milli-seconds:
Minimum = 0ms, Maximum = 3ms, Average = 0ms
C:\>
Top

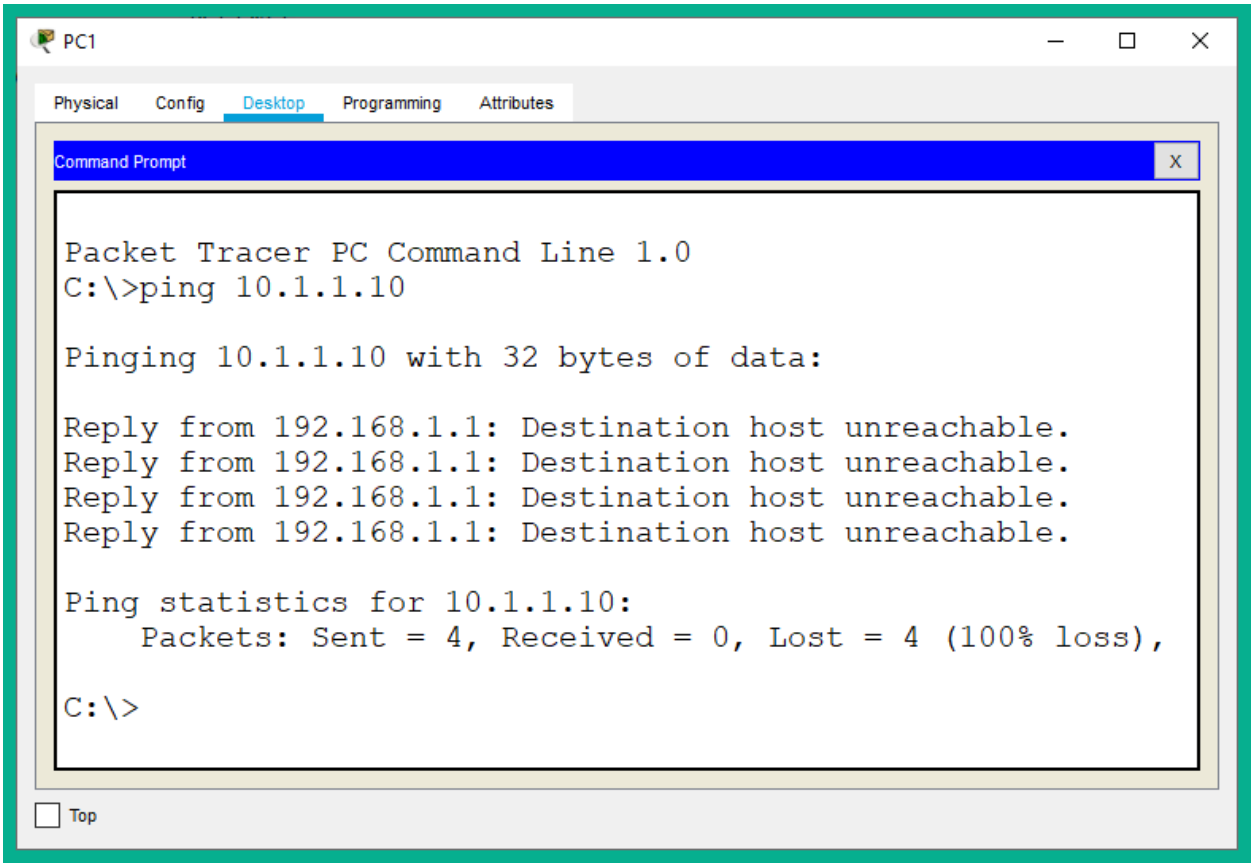


```
HQ#show ip interface gigabitEthernet 0/0
GigabitEthernet0/0 is up, line protocol is up (connected)
  Internet address is 192.0.2.2/30
  Broadcast address is 255.255.255.255
  Address determined by setup command
  MTU is 1500 bytes
  Helper address is not set
  Directed broadcast forwarding is disabled
  Outgoing access list is INT_Access
  Inbound  access list is not set
  Proxy ARP is enabled
  Security level is default
```

***INT_Access* ACL applied on the interface**

```
HQ#show access-lists
Standard IP access list 10
    10 permit host 192.168.1.10
    20 permit 10.1.1.0 0.0.0.255 (4 match(es))
Standard IP access list INT_Access
    10 permit 172.16.1.0 0.0.0.255 (8 match(es))

HQ#
```

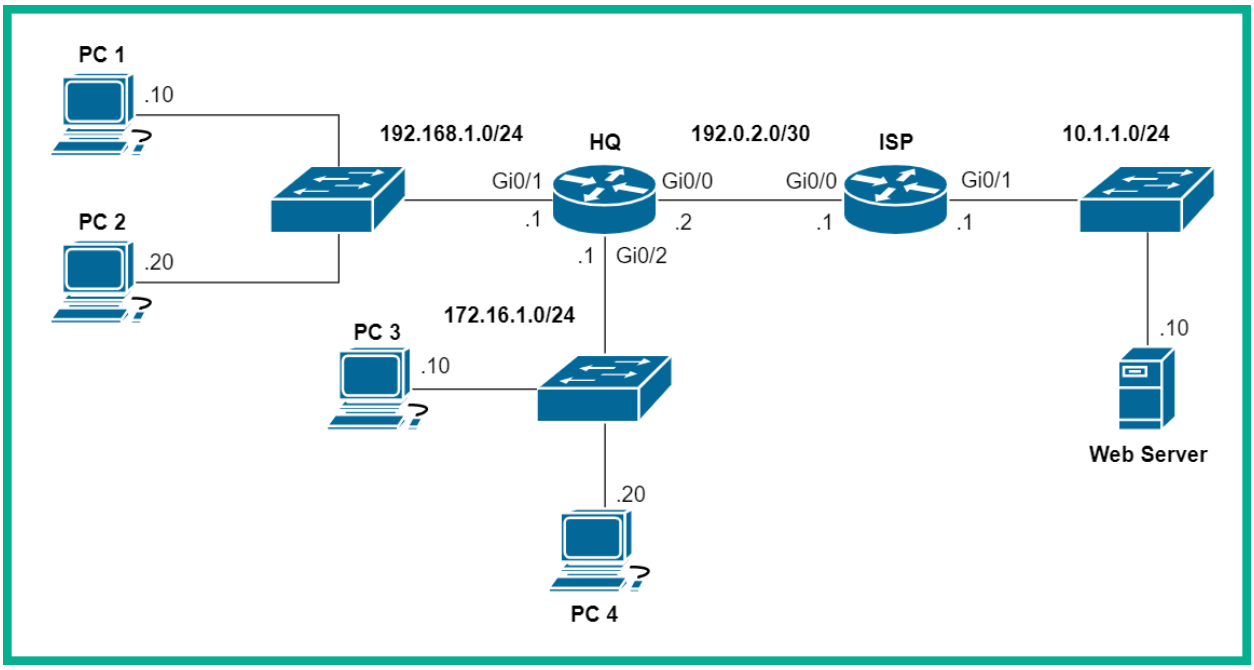


```
HQ#show access-lists
Standard IP access list 10
    10 permit host 192.168.1.10
    20 permit 10.1.1.0 0.0.0.255
Standard IP access list INT_Access
    10 permit 172.16.1.0 0.0.0.255
Standard IP access list Secure-VTY
    10 permit host 172.16.1.10
    20 deny any

HQ#
```

```
!
ip access-list standard Secure-VTY
 permit host 172.16.1.10
 deny any
 remark Securing incoming connections on VTY lines
!
!
line con 0
!
line aux 0
!
line vty 0 4
 access-class Secure-VTY in
 login local
 transport input ssh
line vty 5 15
 access-class Secure-VTY in
 login local
 transport input ssh
!
```

ACL applied under the VTY lines

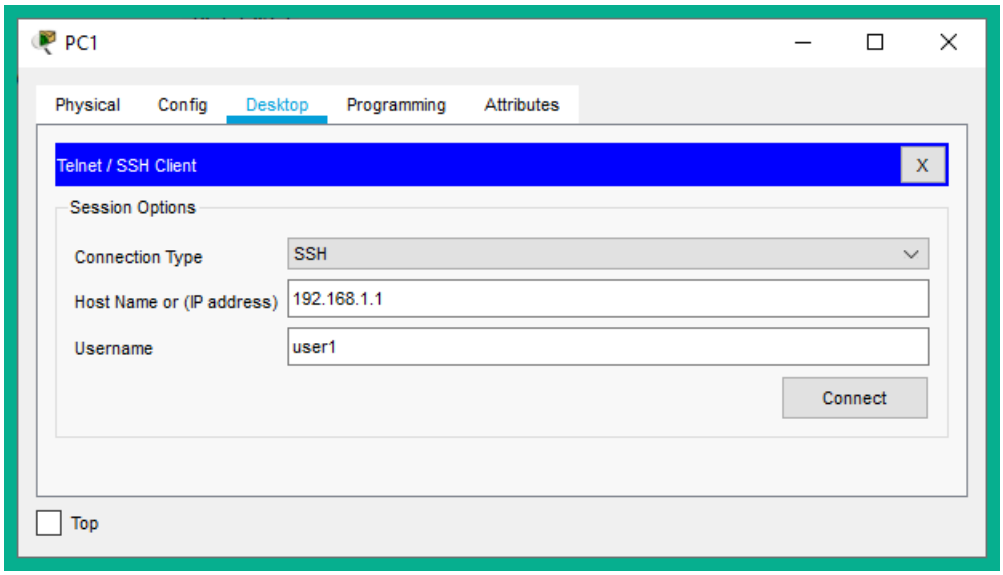

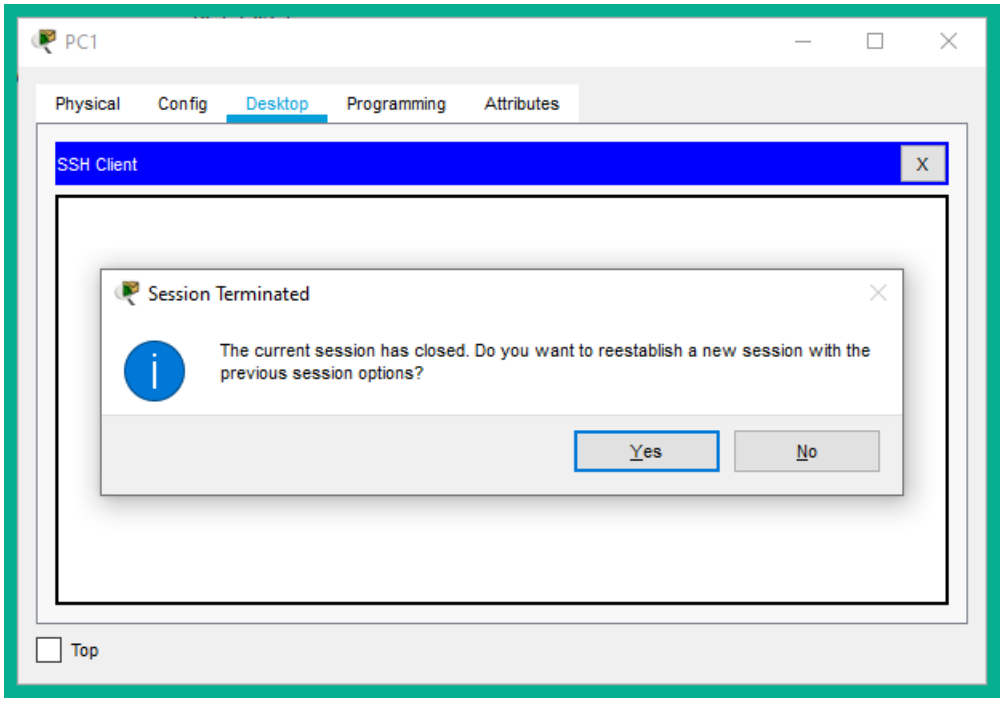
PC1
Physical
Config
Desktop
Programming
Attributes
SSH Client
X
Session Terminated
The current session has closed. Do you want to reestablish a new session with the previous session options?
Yes
No
Top

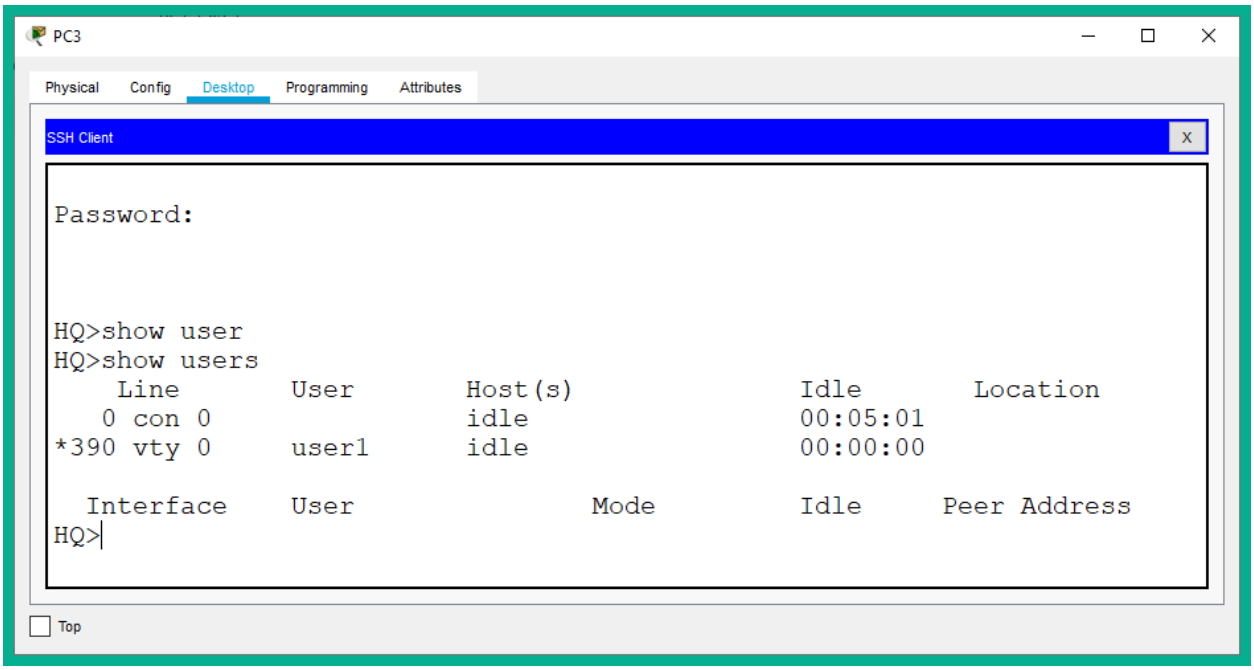
PC3
Physical
Config
Desktop
Programming
Attributes
SSH Client
X
Password:
HQ>show user
HQ>show users
Line User Host(s) Idle Location
0 con 0 idle 00:05:01
*390 vty 0 user1 idle 00:00:00
Interface User Mode Idle Peer Address
HQ>
Top

```
HQ#show access-lists
Standard IP access list 10
    10 permit host 192.168.1.10
    20 permit 10.1.1.0 0.0.0.255
Standard IP access list INT_Access
    10 permit 172.16.1.0 0.0.0.255
Standard IP access list Secure-VTY
    10 permit host 172.16.1.10 (2 match(es))
    20 deny any (32 match(es))

HQ#
```

```
Router(config)#ip access-list extended Ext-ACL
Router(config-ext-nacl)#permit tcp 192.168.1.0 0.0.0.255 172.16.1.0 0.0.0.255 eq 20
Router(config-ext-nacl)#permit tcp 192.168.1.0 0.0.0.255 172.16.1.0 0.0.0.255 eq 21
Router(config-ext-nacl)#exit
Router(config)#interface GigabitEthernet 0/2
Router(config-if)#ip access-group Ext-ACL in
Router(config-if)#exit
```

```
Router(config-ext-nacl)#permit tcp 192.168.1.0 0.0.0.255 172.16.1.0 0.0.0.255 eq ?
  <0-65535>  Port number
  domain     Domain Name Service (DNS, 53)
  ftp        File Transfer Protocol (21)
  pop3       Post Office Protocol v3 (110)
  smtp       Simple Mail Transport Protocol (25)
  telnet     Telnet (23)
  www        World Wide Web (HTTP, 80)
```

Various Keywords that can be used other than port numbers

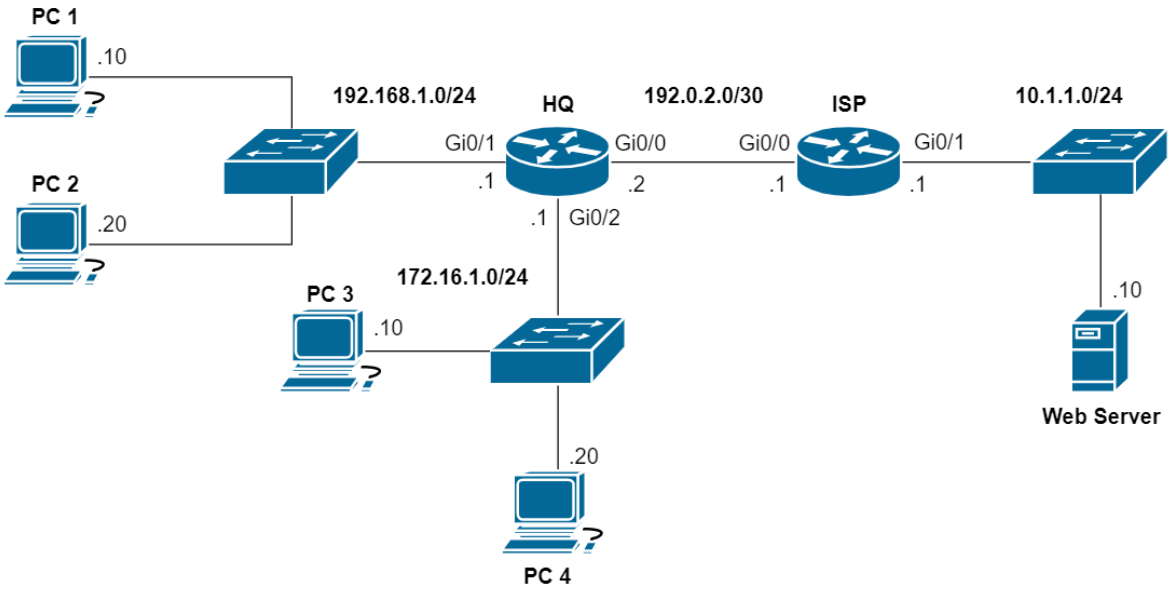

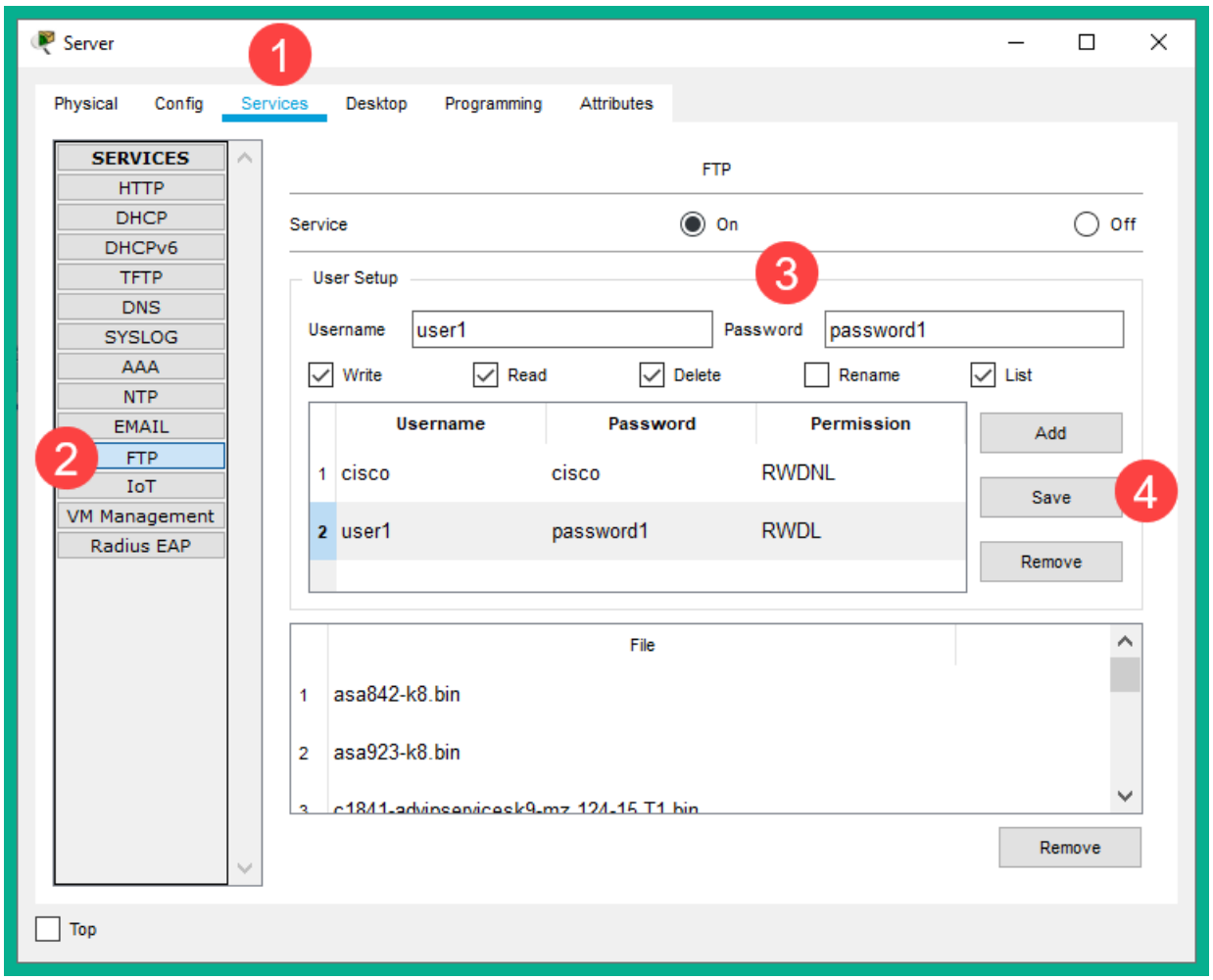
Server
1
Physical
Config
Services
Desktop
Programming
Attributes
SERVICES
HTTP
DHCP
DHCPv6
TFTP
DNS
SYSLOG
AAA
NTP
EMAIL
2
FTP
IoT
VM Management
Radius EAP
FTP
Service
On
Off
3
User Setup
Username
user1
Password
password1
Write
Read
Delete
Rename
List
Username
Password
Permission
1 cisco cisco RWDNL
2 user1 password1 RWDL
Add
Save
4
Remove
File
1 asa842-k8.bin
2 asa923-k8.bin
Remove
Top

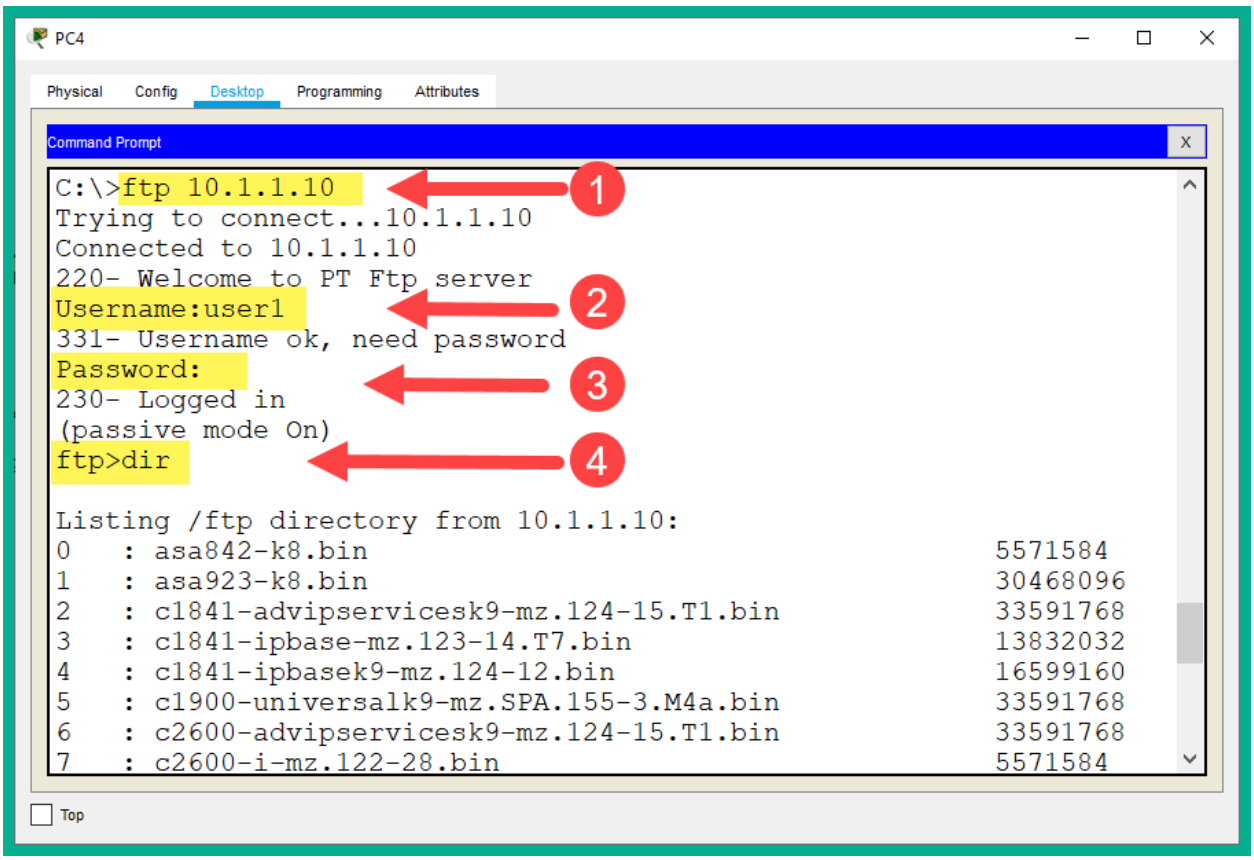


```
HQ#show access-lists Restrict-FTP
Extended IP access list Restrict-FTP
    deny tcp host 172.16.1.10 any eq ftp
    deny tcp host 172.16.1.10 any eq 20
    permit ip any any

HQ#
```

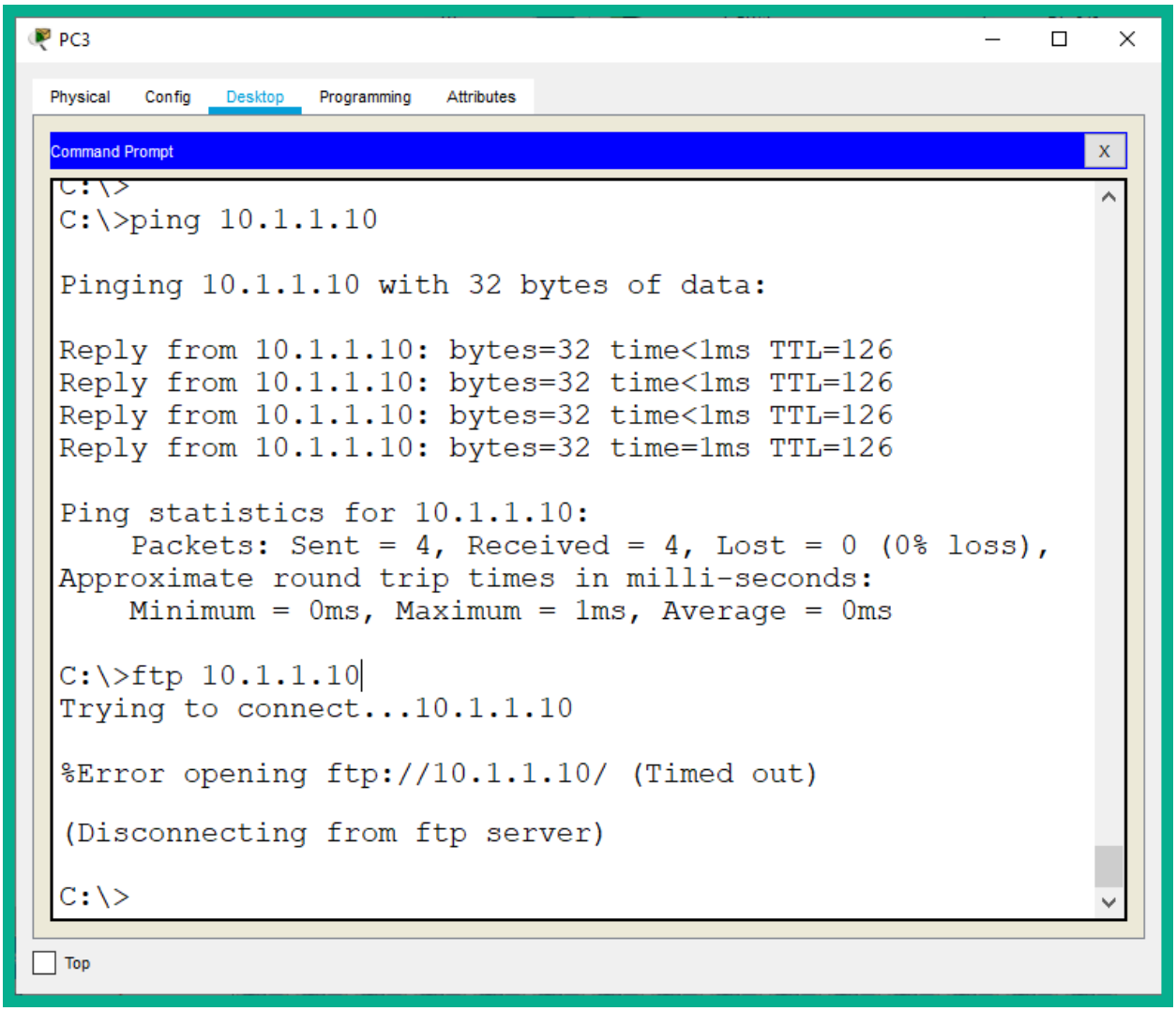
PC3
Physical
Config
Desktop
Programming
Attributes
Command Prompt
X
C:\>
C:\>ping 10.1.1.10
Pinging 10.1.1.10 with 32 bytes of data:
Reply from 10.1.1.10: bytes=32 time<1ms TTL=126
Reply from 10.1.1.10: bytes=32 time<1ms TTL=126
Reply from 10.1.1.10: bytes=32 time<1ms TTL=126
Reply from 10.1.1.10: bytes=32 time=1ms TTL=126
Ping statistics for 10.1.1.10:
Packets: Sent = 4, Received = 4, Lost = 0 (0% loss),
Approximate round trip times in milli-seconds:
Minimum = 0ms, Maximum = 1ms, Average = 0ms
C:\>ftp 10.1.1.10
Trying to connect...10.1.1.10
%Error opening ftp://10.1.1.10/ (Timed out)
(Disconnecting from ftp server)
C:\>
Top

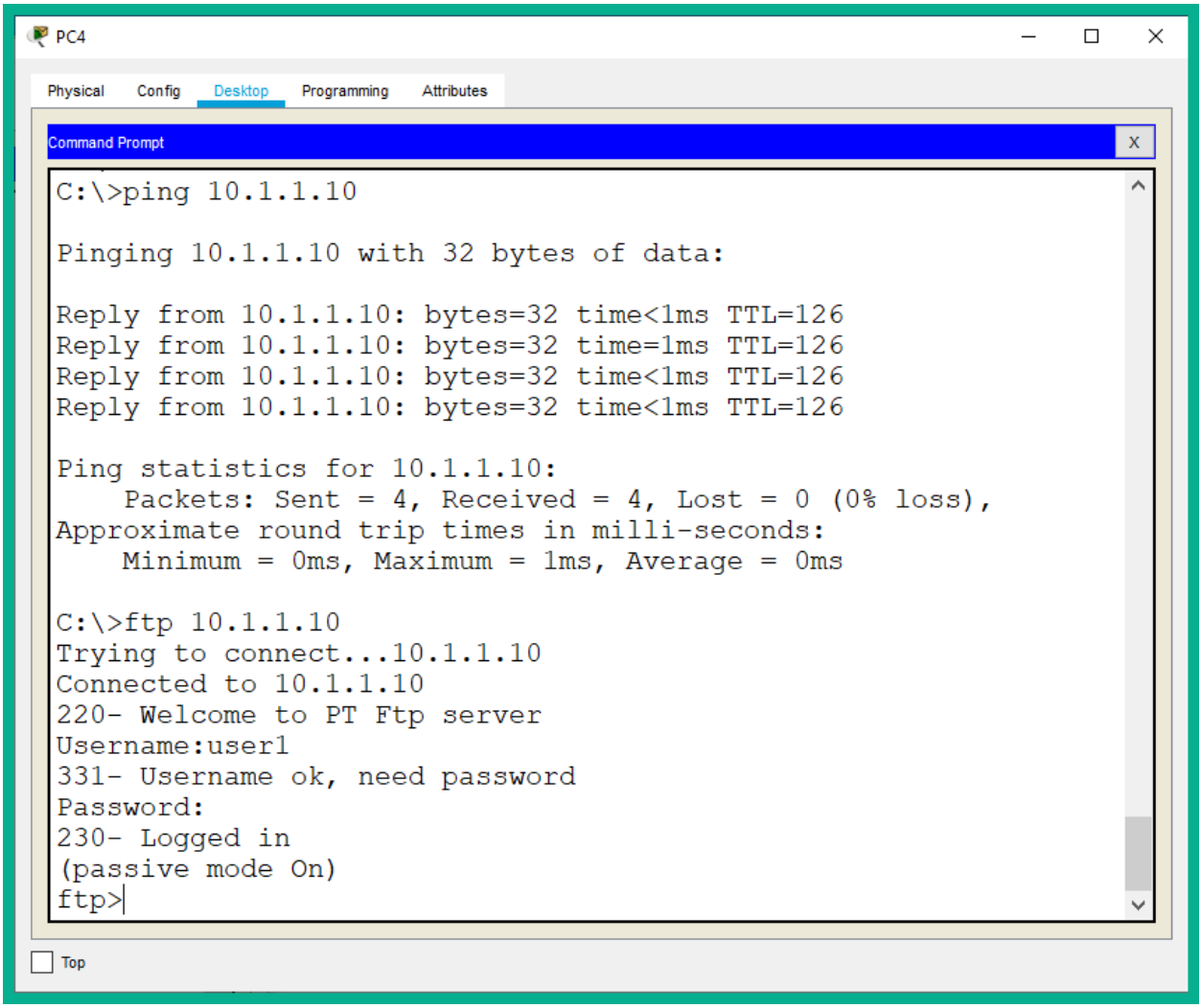


```
HQ#show access-lists Restrict-FTP
Extended IP access list Restrict-FTP
    deny tcp host 172.16.1.10 any eq ftp (24 match(es))
    deny tcp host 172.16.1.10 any eq 20
    permit ip any any (11 match(es))
```

Chapter 14: Implementing Layer 2 and Wireless Security

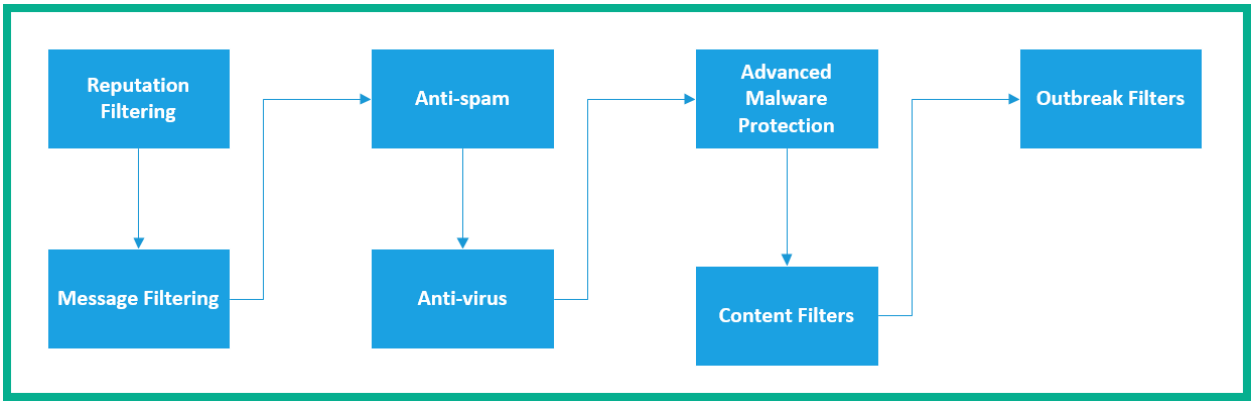

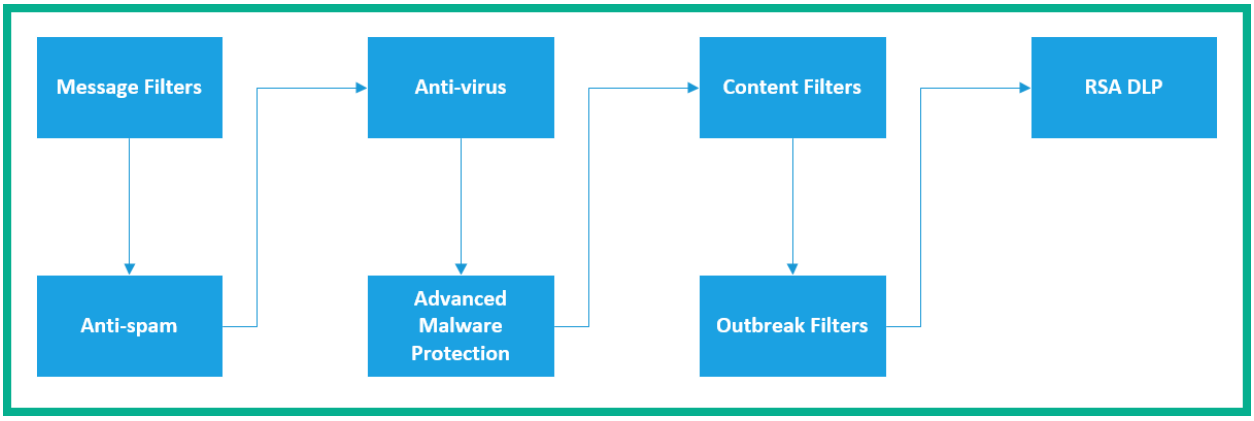

Layer	OSI Model	TCP/IP Stack	Layer
7	Application	Application	5
6	Presentation		
5	Session		
4	Transport	Transport	4
3	Network	Internet	3
2	Data Link	Data Link	2
1	Physical	Physical	1

```
SW1#show mac address-table dynamic
          Mac Address Table
-------------------------------------------

Vlan    Mac Address       Type        Ports
----    -----------       --------    -----

  10    0006.2a88.7218    DYNAMIC      Fa0/24
  10    00d0.ffbc.7202    DYNAMIC      Fa0/24
  10    00e0.b098.d202    DYNAMIC      Fa0/1
  20    0006.2a88.7218    DYNAMIC      Fa0/24
  20    00d0.ffbc.7202    DYNAMIC      Fa0/24
  20    00e0.f72b.9a51    DYNAMIC      Fa0/2
  30    0006.2a88.7218    DYNAMIC      Fa0/24
  30    00d0.ffbc.7202    DYNAMIC      Fa0/24
SW1#
```

```
Switch#show mac address-table count

Mac Entries for Vlan 1:
---------------------------
Dynamic Address Count  : 0
Static  Address Count  : 0
Total Mac Addresses    : 0

Total Mac Address Space Available: 77818696

Switch#
```

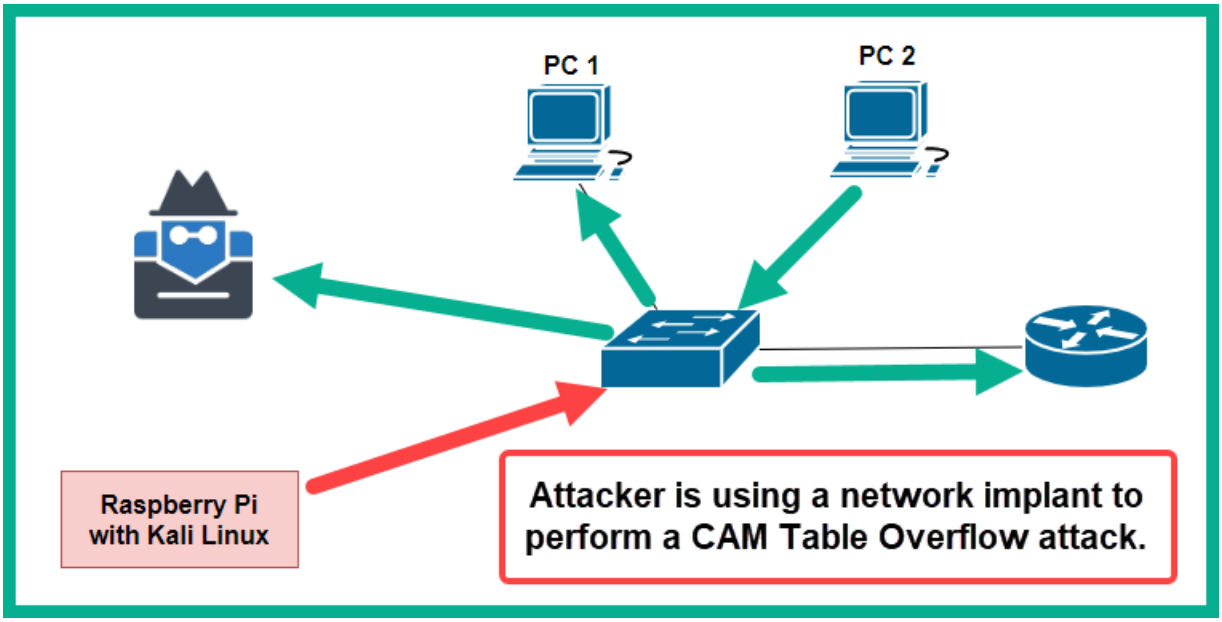


```
root@kali:~# macof -i eth0
e1:80:f9:45:98:9 6:52:70:39:eb:a1 0.0.0.0.19006 > 0.0.0.0.4320: S 710988111:710988111(0) win 512
1c:c:8a:50:21:a7 e8:31:d7:2d:1e:37 0.0.0.0.35536 > 0.0.0.0.48231: S 1540156923:1540156923(0) win 512
ca:40:59:65:9e:45 9:df:d7:39:65:12 0.0.0.0.16661 > 0.0.0.0.43605: S 1569897595:1569897595(0) win 512
a5:1d:98:6a:e8:60 1e:14:46:61:b4:93 0.0.0.0.61026 > 0.0.0.0.52498: S 1701381115:1701381115(0) win 512
5e:fd:d1:5e:a:46 4e:0:e6:10:ef:3b 0.0.0.0.42122 > 0.0.0.0.34809: S 1692649512:1692649512(0) win 512
75:43:94:29:2f:53 3e:36:b2:7d:eb:85 0.0.0.0.63383 > 0.0.0.0.9898: S 1183917742:1183917742(0) win 512
7d:be:f8:53:7c:75 c2:c4:cc:2d:da:7 0.0.0.0.24670 > 0.0.0.0.30611: S 976029769:976029769(0) win 512
ae:9d:f7:43:a6:1e 5a:7:73:8:d9:f2 0.0.0.0.25470 > 0.0.0.0.32543: S 210634849:210634849(0) win 512
c2:a7:af:45:f8:81 5f:d8:59:b:63:21 0.0.0.0.58444 > 0.0.0.0.32636: S 982725989:982725989(0) win 512
a6:c0:7c:50:6e:2 31:2f:d7:17:b2:3 0.0.0.0.63764 > 0.0.0.0.60069: S 611132256:611132256(0) win 512
7:b1:61:3:74:29 10:f6:20:64:36:c4 0.0.0.0.53548 > 0.0.0.0.32715: S 294560344:294560344(0) win 512
```

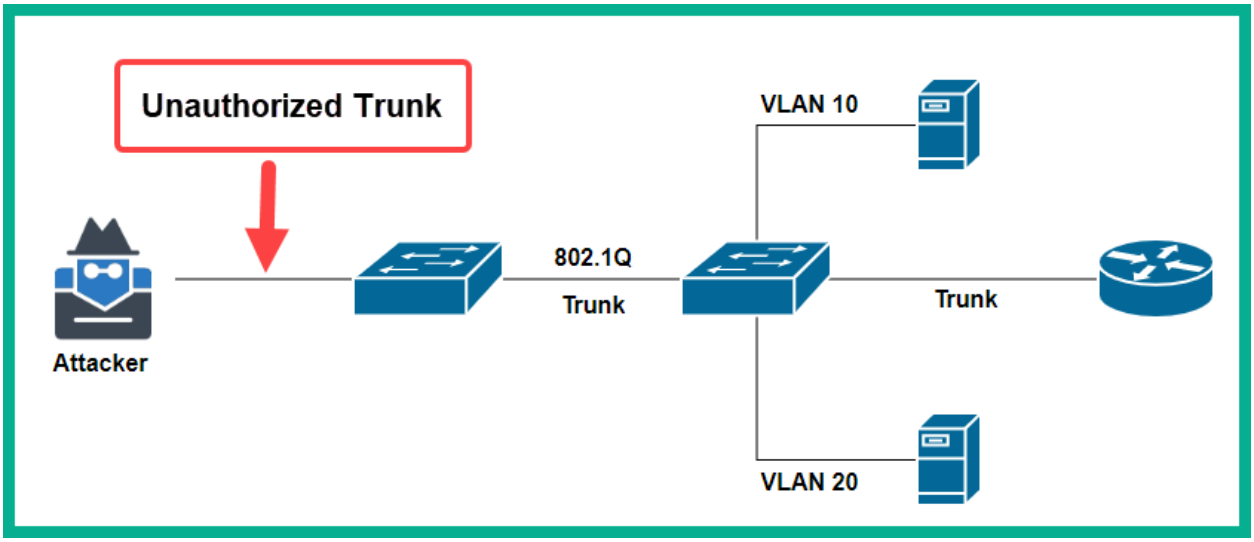

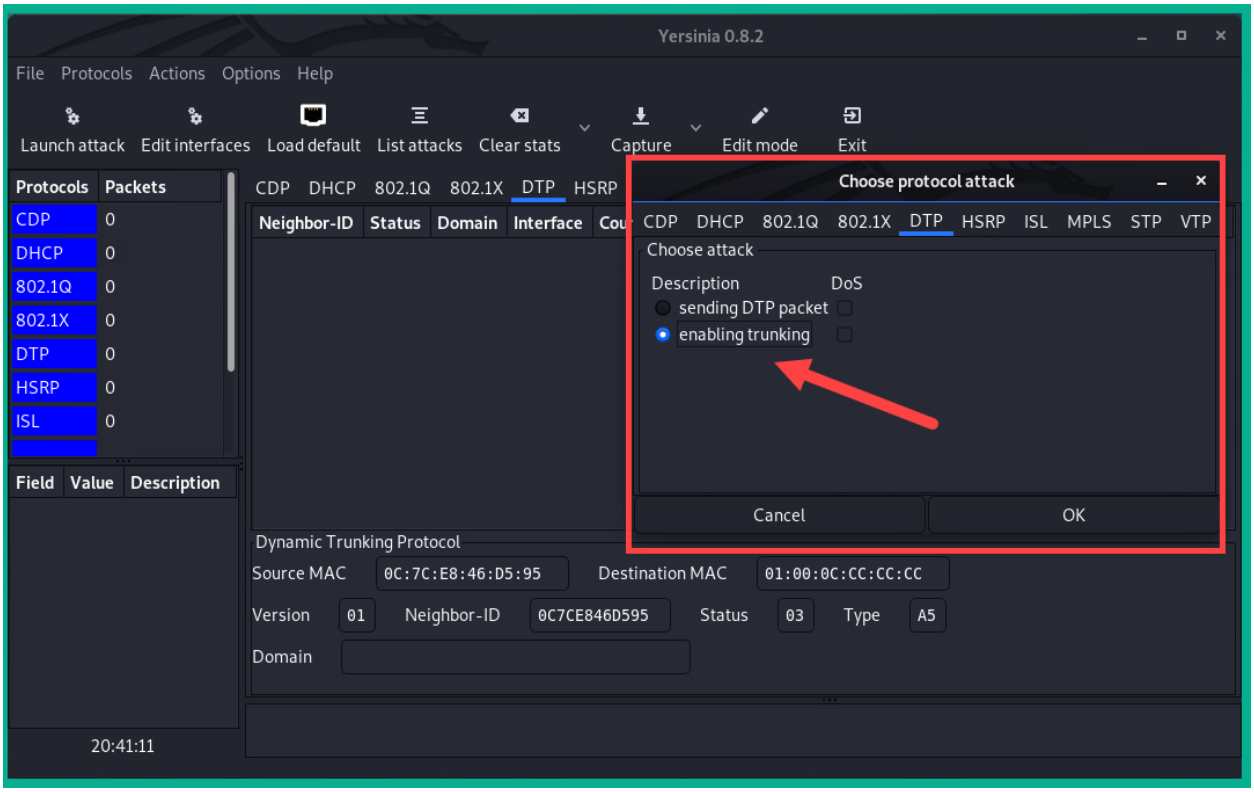
Yersinia 0.8.2
File Protocols Actions Options Help
Launch attack
Edit interfaces
Load default
List attacks
Clear stats
Capture
Edit mode
Exit
Protocols Packets
CDP 0
DHCP 0
802.1Q 0
802.1X 0
DTP 0
HSRP 0
ISL 0
Field Value Description
20:41:11
CDP DHCP 802.1Q 802.1X DTP HSRP
Neighbor-ID Status Domain Interface
Choose protocol attack
CDP DHCP 802.1Q 802.1X DTP HSRP ISL MPLS STP VTP
Choose attack
Description DoS
sending DTP packet
enabling trunking
Cancel
OK
Dynamic Trunking Protocol
Source MAC 0C:7C:E8:46:D5:95
Destination MAC 01:00:0C:CC:CC:CC
Version 01
Neighbor-ID 0C7CE846D595
Status 03
Type A5
Domain

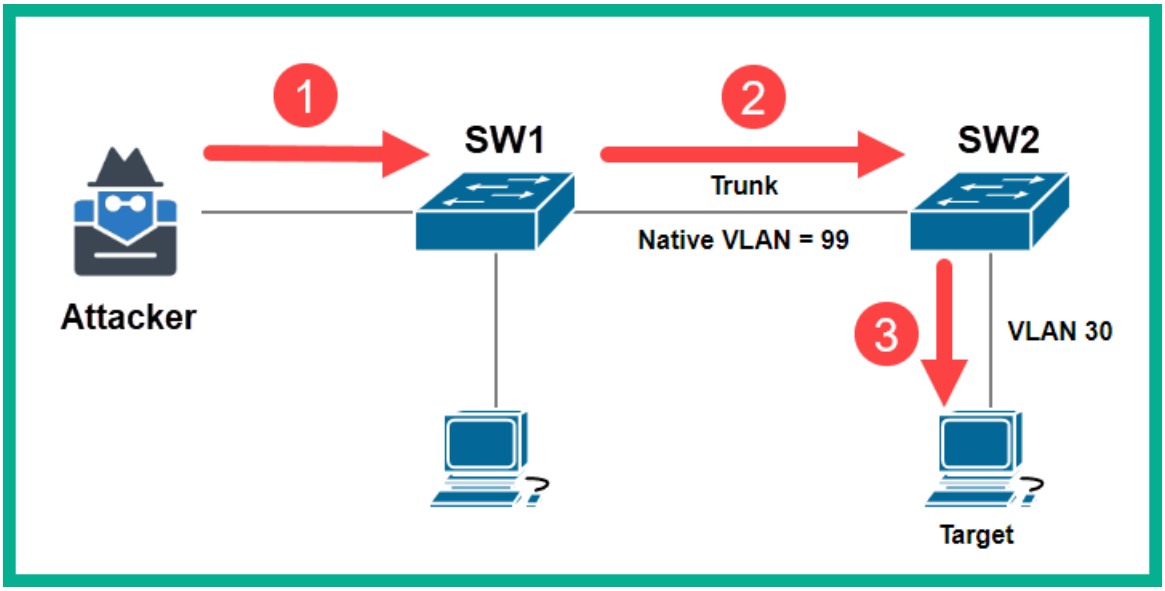
1
2
SW1
SW2
Trunk
Native VLAN = 99
Attacker
3
VLAN 30
Target

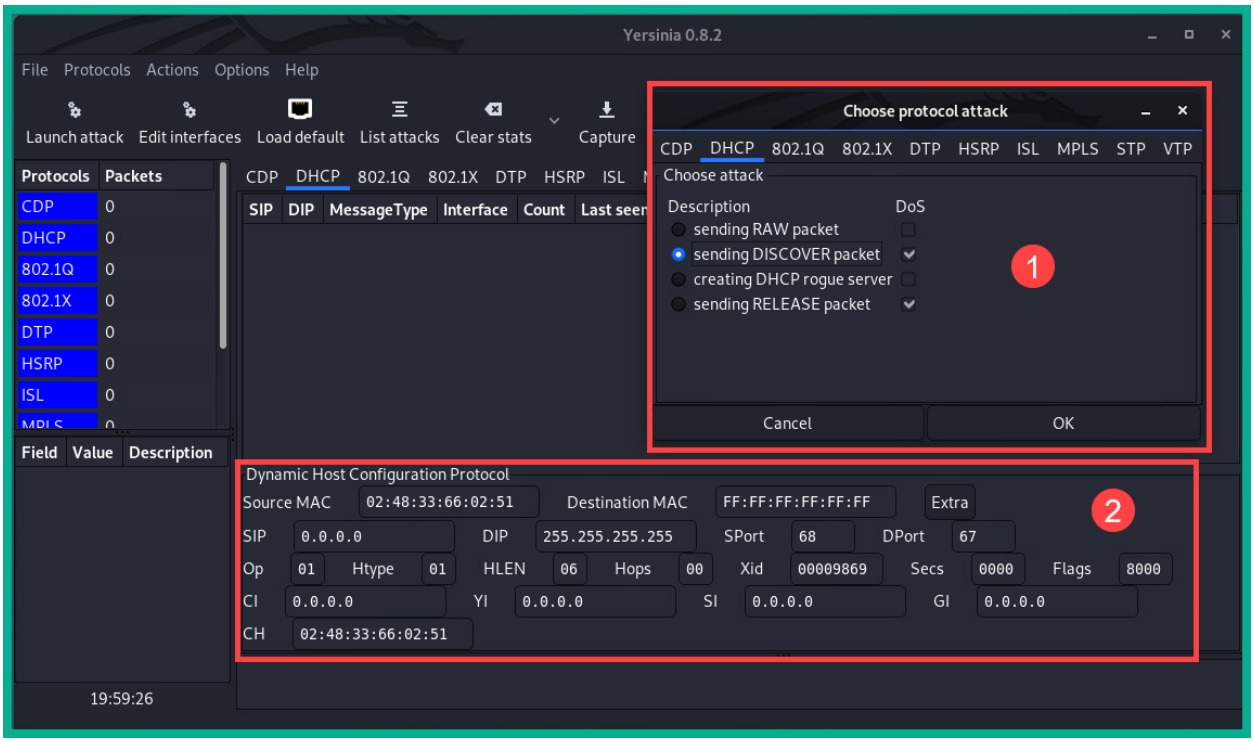
Yersinia 0.8.2
File Protocols Actions Options Help
Launch attack
Edit interfaces
Load default
List attacks
Clear stats
Capture
Protocols Packets
CDP 0
DHCP 0
802.1Q 0
802.1X 0
DTP 0
HSRP 0
ISL 0
CDP DHCP 802.1Q 802.1X DTP HSRP ISL
SIP DIP MessageType Interface Count Last seen
Field Value Description
19:59:26
Choose protocol attack
CDP DHCP 802.1Q 802.1X DTP HSRP ISL MPLS STP VTP
Choose attack
Description
DoS
sending RAW packet
sending DISCOVER packet
creating DHCP rogue server
sending RELEASE packet
1
Cancel
OK
Dynamic Host Configuration Protocol
Source MAC 02:48:33:66:02:51
Destination MAC FF:FF:FF:FF:FF:FF
Extra
SIP 0.0.0.0
DIP 255.255.255.255
SPort 68
DPort 67
Op 01
Htype 01
HLEN 06
Hops 00
Xid 00009869
Secs 0000
Flags 8000
CI 0.0.0.0
YI 0.0.0.0
SI 0.0.0.0
GI 0.0.0.0
CH 02:48:33:66:02:51
2

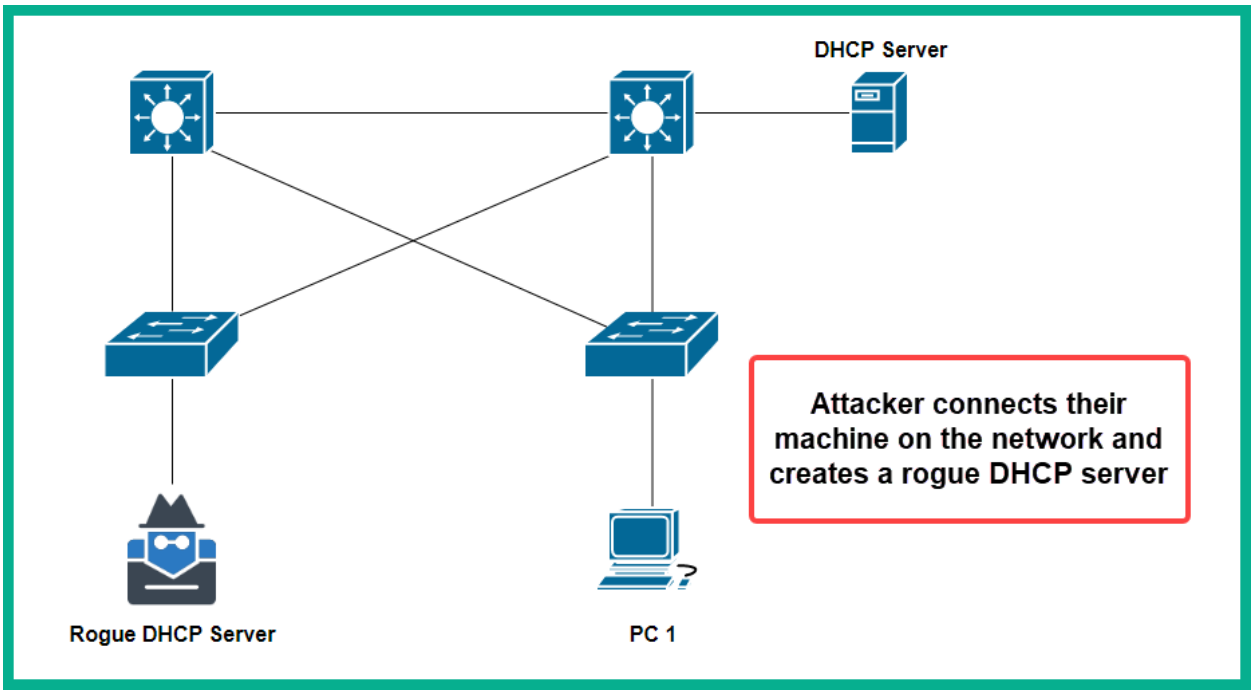
DHCP Server
Attacker connects their machine on the network and creates a rogue DHCP server
Rogue DHCP Server
PC 1

```
C:\>arp -a

Interface: 172.16.17.11 --- 0x1a
  Internet Address      Physical Address      Type
  172.16.17.2           f8-54-b8              dynamic
  172.16.17.6           f8-54-b8              dynamic
  172.16.17.18          9c-3d-cf              dynamic
  172.16.17.255         ff-ff-ff              static
  224.0.0.22            01-00-5e              static
  224.0.0.251           01-00-5e              static
  224.0.0.252           01-00-5e              static
  239.255.255.250       01-00-5e              static
  255.255.255.255       ff-ff-ff              static

C:\>
```

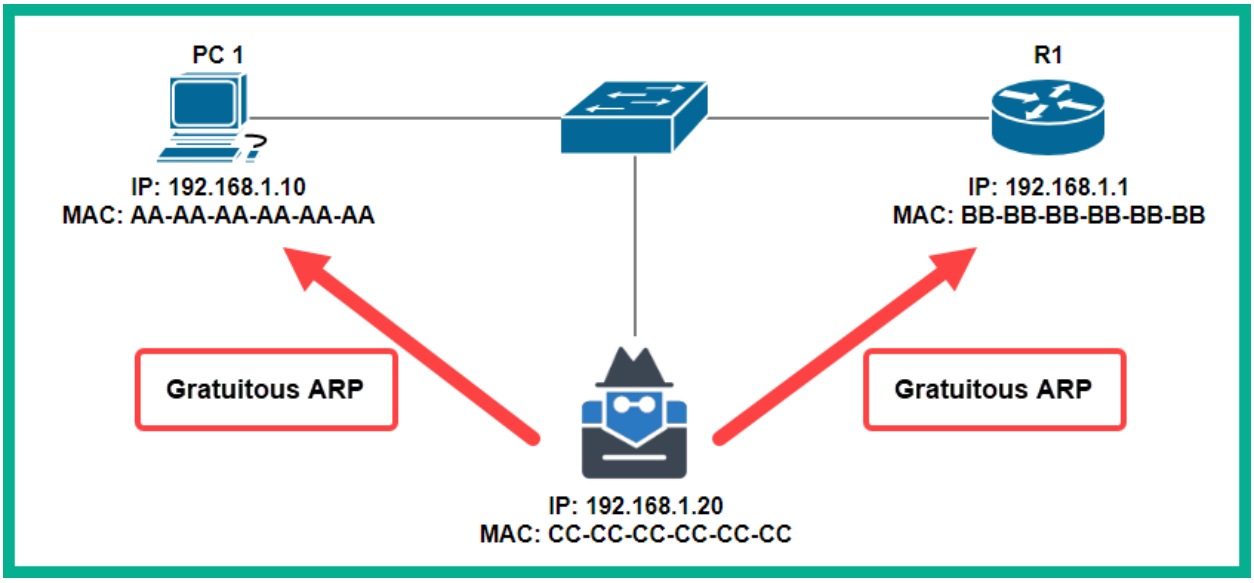

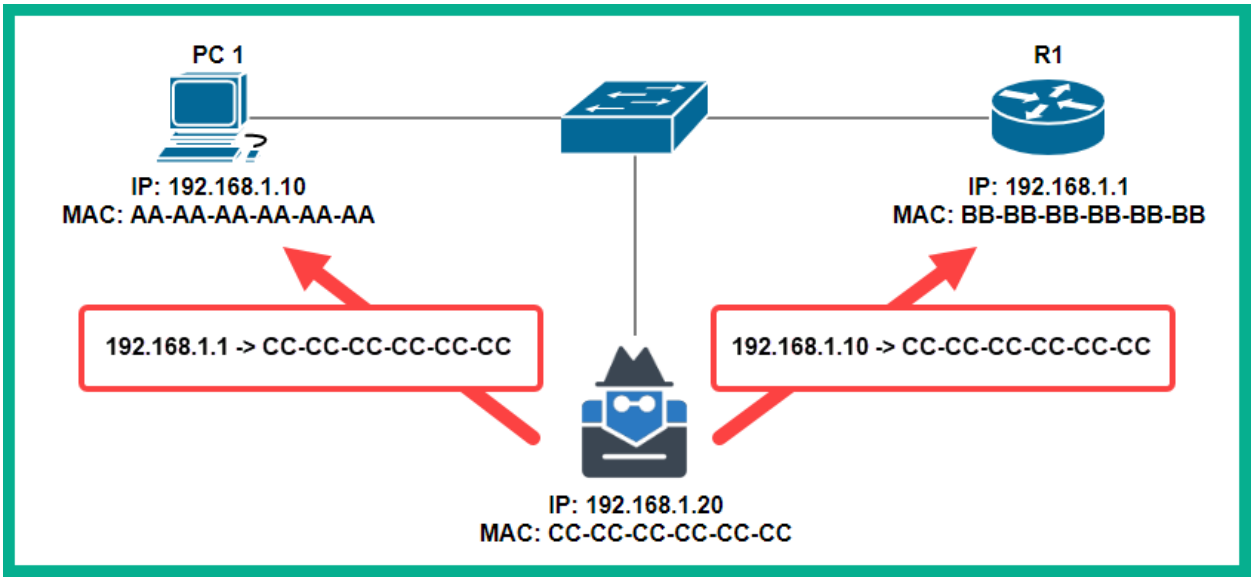

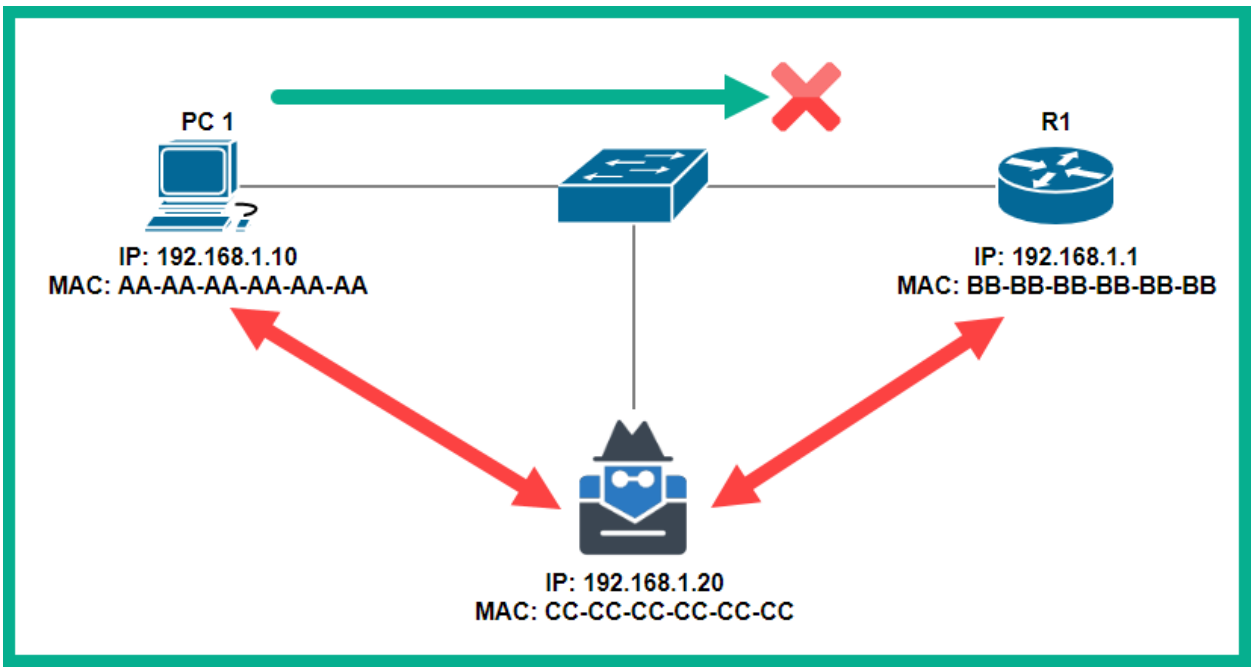
PC 1
R1
IP: 192.168.1.10
MAC: AA-AA-AA-AA-AA-AA
IP: 192.168.1.1
MAC: BB-BB-BB-BB-BB-BB
IP: 192.168.1.20
MAC: CC-CC-CC-CC-CC-CC

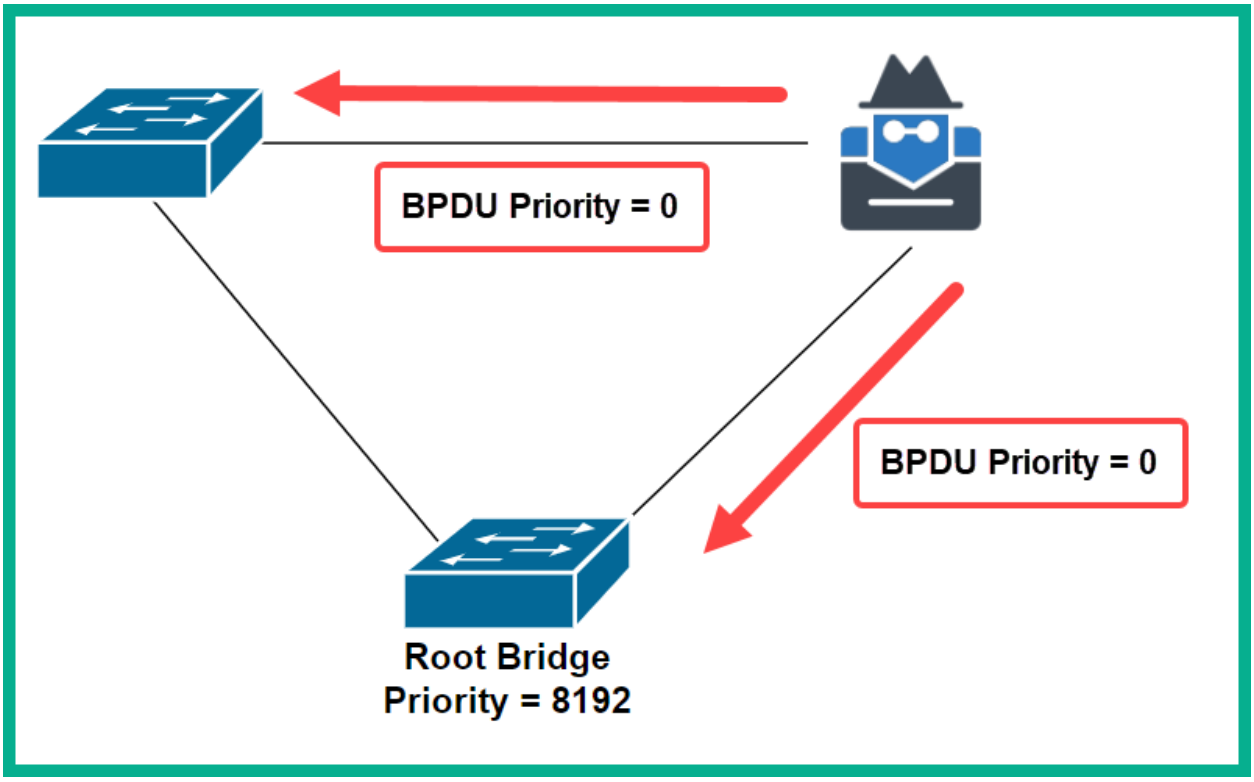
BPDU Priority = 0
BPDU Priority = 0
Root Bridge
Priority = 8192

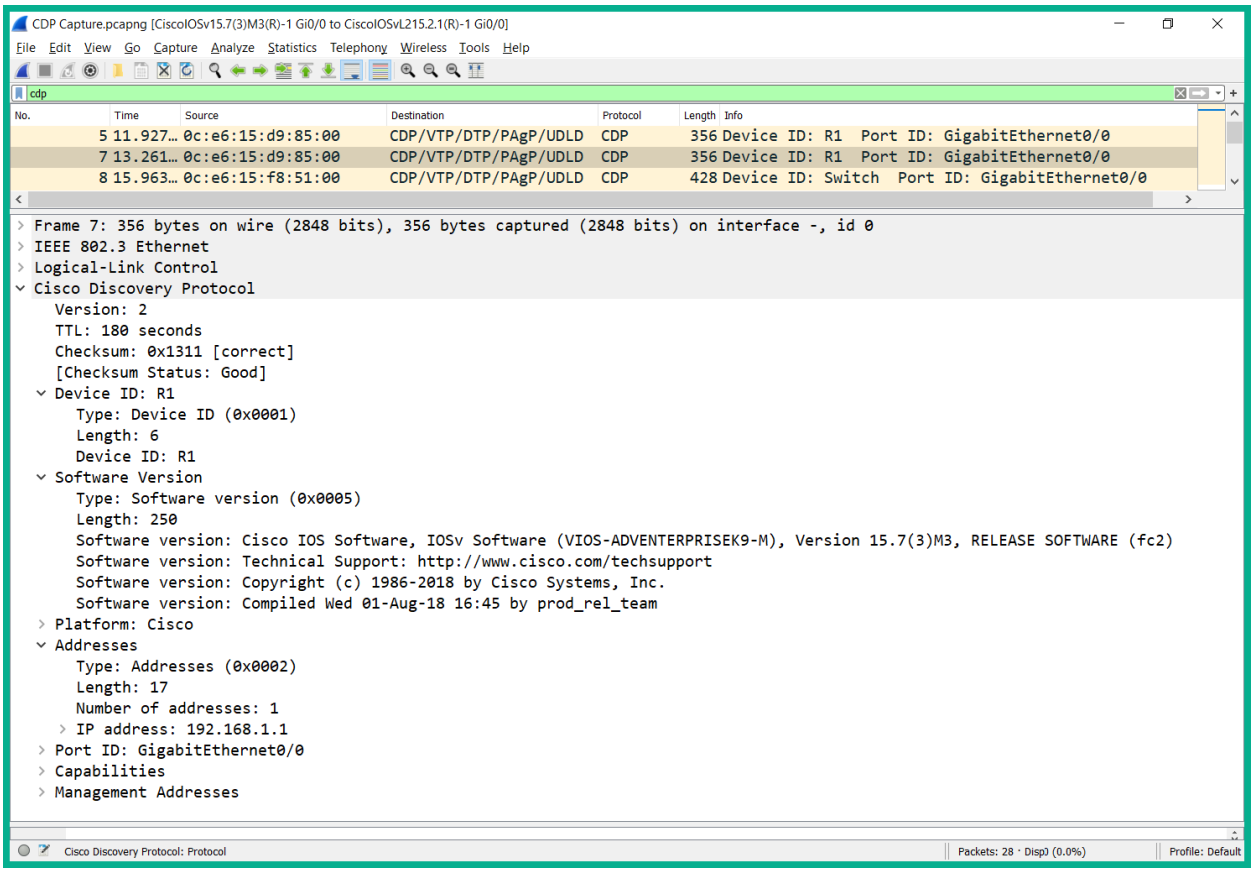


```
Switch(config)#interface FastEthernet 0/1
Switch(config-if)#shutdown
Switch(config-if)#exit
Switch#show ip interface brief
Interface              IP-Address      OK? Method Status                Protocol
FastEthernet0/1        unassigned      YES manual administratively down down
FastEthernet0/2        unassigned      YES manual down                  down
FastEthernet0/3        unassigned      YES manual down                  down
```

```
Switch(config)#interface range FastEthernet 0/5 - FastEthernet 0/10
Switch(config-if-range)#shutdown
Switch(config-if-range)#exit
Switch(config)#exit
Switch#
%SYS-5-CONFIG_I: Configured from console by console

Switch#show ip interface brief | include administratively
FastEthernet0/1        unassigned      YES manual administratively down down
FastEthernet0/5        unassigned      YES manual administratively down down
FastEthernet0/6        unassigned      YES manual administratively down down
FastEthernet0/7        unassigned      YES manual administratively down down
FastEthernet0/8        unassigned      YES manual administratively down down
FastEthernet0/9        unassigned      YES manual administratively down down
FastEthernet0/10       unassigned      YES manual administratively down down
Switch#
```

```
Switch#show port-security interface fastEthernet 0/1
Port Security                  : Enabled
Port Status                    : Secure-up
Violation Mode                 : Shutdown
Aging Time                     : 0 mins
Aging Type                     : Absolute
SecureStatic Address Aging     : Disabled
Maximum MAC Addresses          : 1
Total MAC Addresses            : 0
Configured MAC Addresses       : 0
Sticky MAC Addresses           : 0
Last Source Address:Vlan       : 0000.0000.0000:0
Security Violation Count       : 0

Switch#
```

1
2
3

```
Switch#show port-security interface GigabitEthernet 0/1
Port Security                  : Enabled
Port Status                    : Secure-up
Violation Mode                 : Shutdown
Aging Time                     : 0 mins
Aging Type                     : Absolute
SecureStatic Address Aging     : Disabled
Maximum MAC Addresses          : 2
Total MAC Addresses            : 2
Configured MAC Addresses       : 1
Sticky MAC Addresses           : 1
Last Source Address:Vlan       : bad4.e05d.fbdf:1
Security Violation Count       : 0

Switch#
```

```
Switch#show port-security
Secure Port  MaxSecureAddr  CurrentAddr  SecurityViolation  Security Action
                (Count)       (Count)         (Count)
---------------------------------------------------------------------------
      Gi0/1              2            2                  0         Shutdown
---------------------------------------------------------------------------
Total Addresses in System (excluding one mac per port)     : 1
Max Addresses limit in System (excluding one mac per port) : 4096
Switch#
```

```
Switch#show running-config | begin interface
interface GigabitEthernet0/0
 negotiation auto
!
interface GigabitEthernet0/1
 switchport mode access
 switchport port-security maximum 2
 switchport port-security mac-address sticky
 switchport port-security mac-address b881.98d3.b223
 switchport port-security mac-address sticky bad4.e05d.fbdf
 switchport port-security
 negotiation auto
!
```

```
Switch#show port-security interface GigabitEthernet 0/1
Port Security              : Enabled
Port Status                : Secure-up
Violation Mode             : Shutdown
Aging Time                 : 5 mins
Aging Type                 : Inactivity
SecureStatic Address Aging : Disabled
Maximum MAC Addresses      : 2
Total MAC Addresses        : 2
Configured MAC Addresses   : 1
Sticky MAC Addresses       : 1
Last Source Address:Vlan   : bad4.e05d.fbdf:1
Security Violation Count   : 0

Switch#
```

```
Switch#show port-security interface GigabitEthernet 0/1
Port Security              : Enabled
Port Status                : Secure-up
Violation Mode             : Restrict
Aging Time                 : 5 mins
Aging Type                 : Inactivity
SecureStatic Address Aging : Disabled
Maximum MAC Addresses      : 2
Total MAC Addresses        : 2
Configured MAC Addresses   : 1
Sticky MAC Addresses       : 1
Last Source Address:Vlan   : bad4.e05d.fbdf:1
Security Violation Count   : 0

Switch#
```

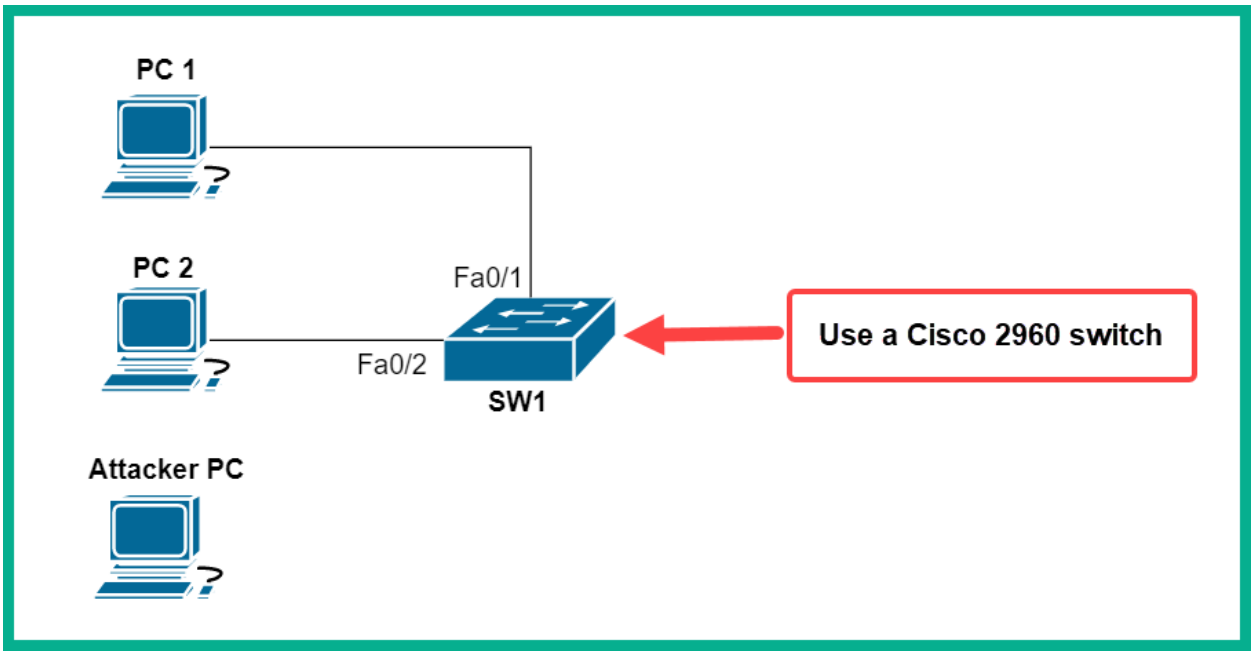

Device	Interface	IP Address	Subnet Mask	Default Gateway
PC 1	Fa0	172.16.1.10	255.255.255.0	172.16.1.1
PC 2	Fa0	172.16.1.20	255.255.255.0	172.16.1.1
Attacker PC	Fa0	172.16.1.30	255.255.255.0	172.16.1.1

```
SW1#show port-security interface fastEthernet 0/2
Port Security              : Enabled
Port Status                : Secure-up
Violation Mode             : Shutdown
Aging Time                 : 0 mins
Aging Type                 : Absolute
SecureStatic Address Aging : Disabled
Maximum MAC Addresses      : 1
Total MAC Addresses        : 1
Configured MAC Addresses   : 0
Sticky MAC Addresses       : 1
Last Source Address:Vlan   : 0001.C9BA.5B83:1
Security Violation Count   : 0

SW1#
```

```
SW1#show running-config
Building configuration...

Current configuration : 1629 bytes
!
!
interface FastEthernet0/1
 switchport mode access
 switchport port-security
 switchport port-security mac-address sticky
 switchport port-security mac-address sticky 0001.966B.B95A
!
interface FastEthernet0/2
 switchport mode access
 switchport port-security
 switchport port-security mac-address sticky
 switchport port-security mac-address sticky 0001.C9BA.5B83
!
```

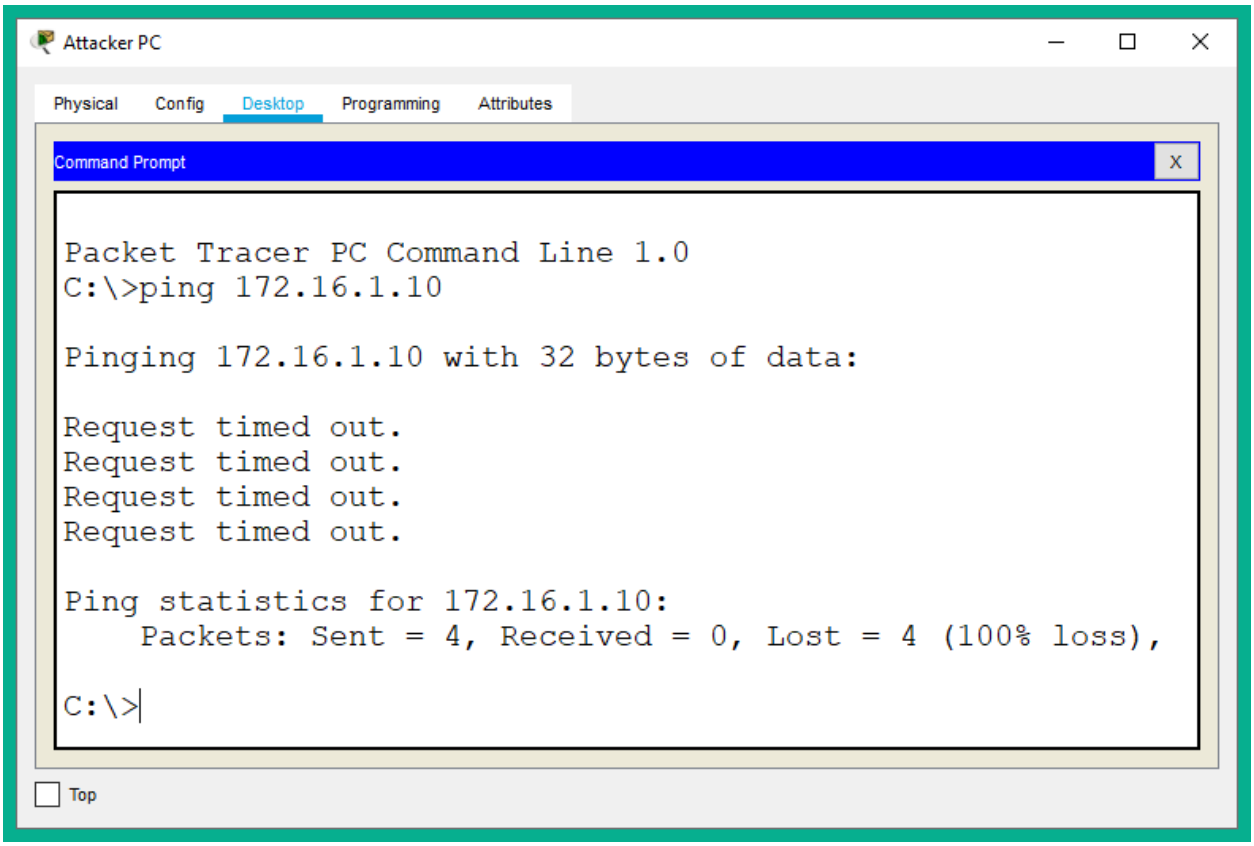

```
SW1#show port-security interface fastEthernet 0/2
Port Security              : Enabled
Port Status                : Secure-shutdown
Violation Mode             : Shutdown
Aging Time                 : 0 mins
Aging Type                 : Absolute
SecureStatic Address Aging : Disabled
Maximum MAC Addresses      : 1
Total MAC Addresses        : 1
Configured MAC Addresses   : 0
Sticky MAC Addresses       : 1
Last Source Address:Vlan   : 00E0.F9E9.5E39:1
Security Violation Count   : 1

SW1#
```

```
SW1#show interfaces status
Port      Name               Status       Vlan       Duplex  Speed Type
Fa0/1                        connected    1          auto    auto  10/100BaseTX
Fa0/2                        err-disabled 1          auto    auto  10/100BaseTX
Fa0/3                        disabled 1            auto    auto  10/100BaseTX
Fa0/4                        disabled 1            auto    auto  10/100BaseTX
Fa0/5                        disabled 1            auto    auto  10/100BaseTX
```

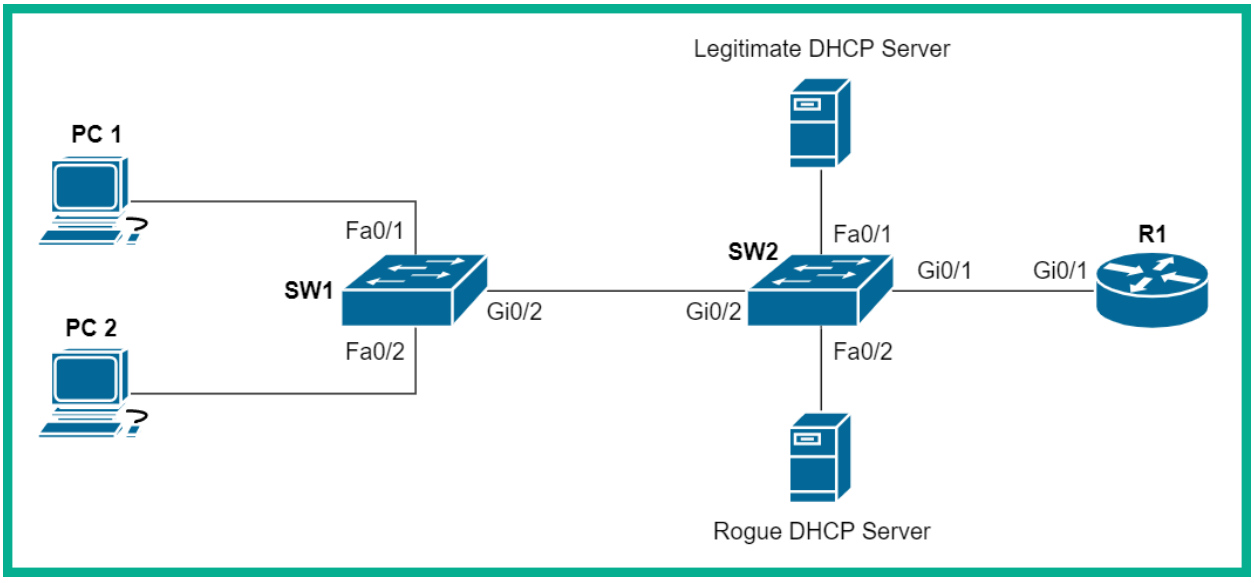

Device	Interface	IP Address	Subnet Mask	Default Gateway
PC 1	Fa0	DHCP		
PC 2	Fa0	DHCP		
DHCP Server	Fa0	172.16.1.100	255.255.255.0	172.16.1.1
Rogue DHCP Server	Fa0	172.16.1.110	255.255.255.0	172.16.1.1
R1	Gi0/1	172.16.1.1	255.255.255.0	

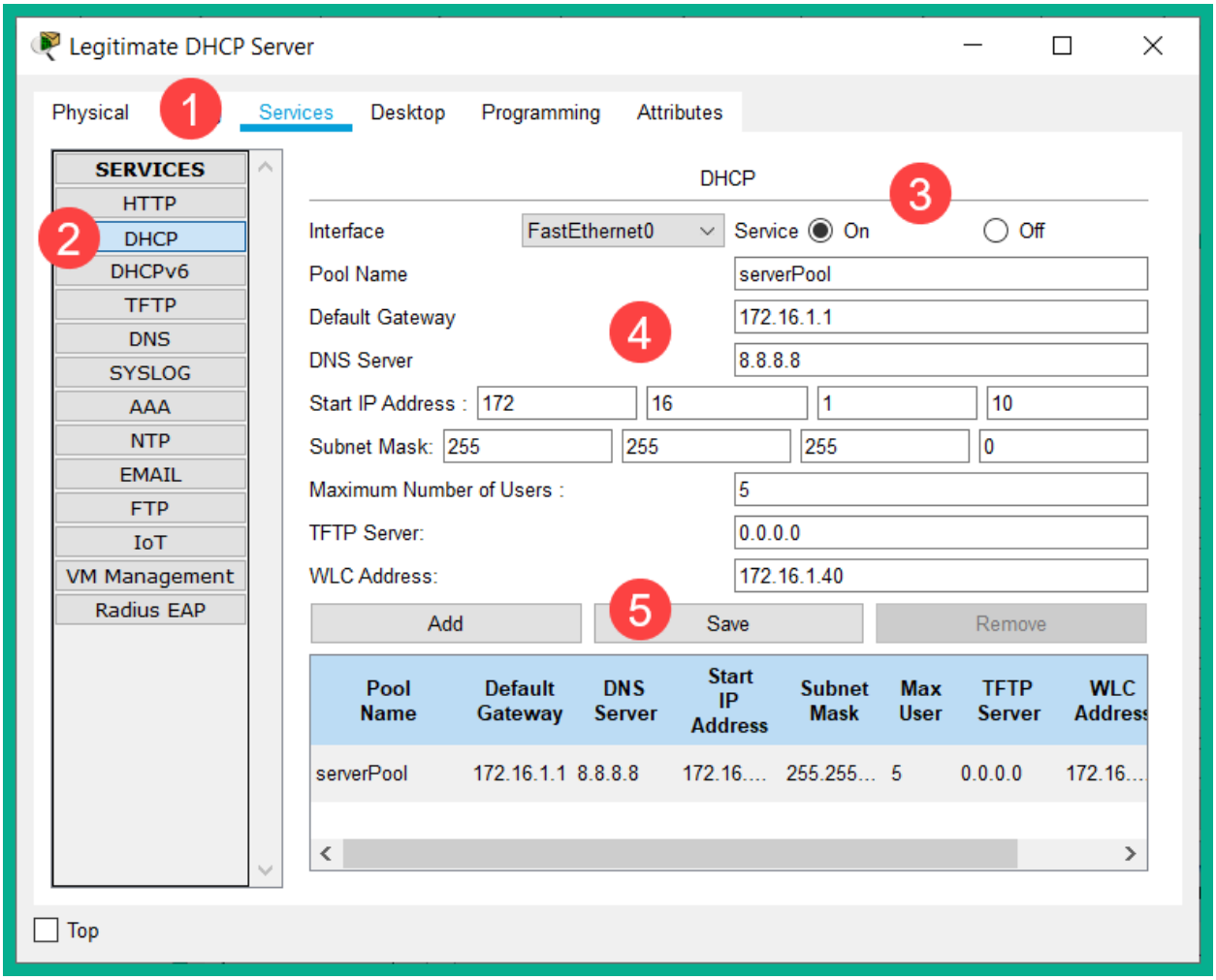

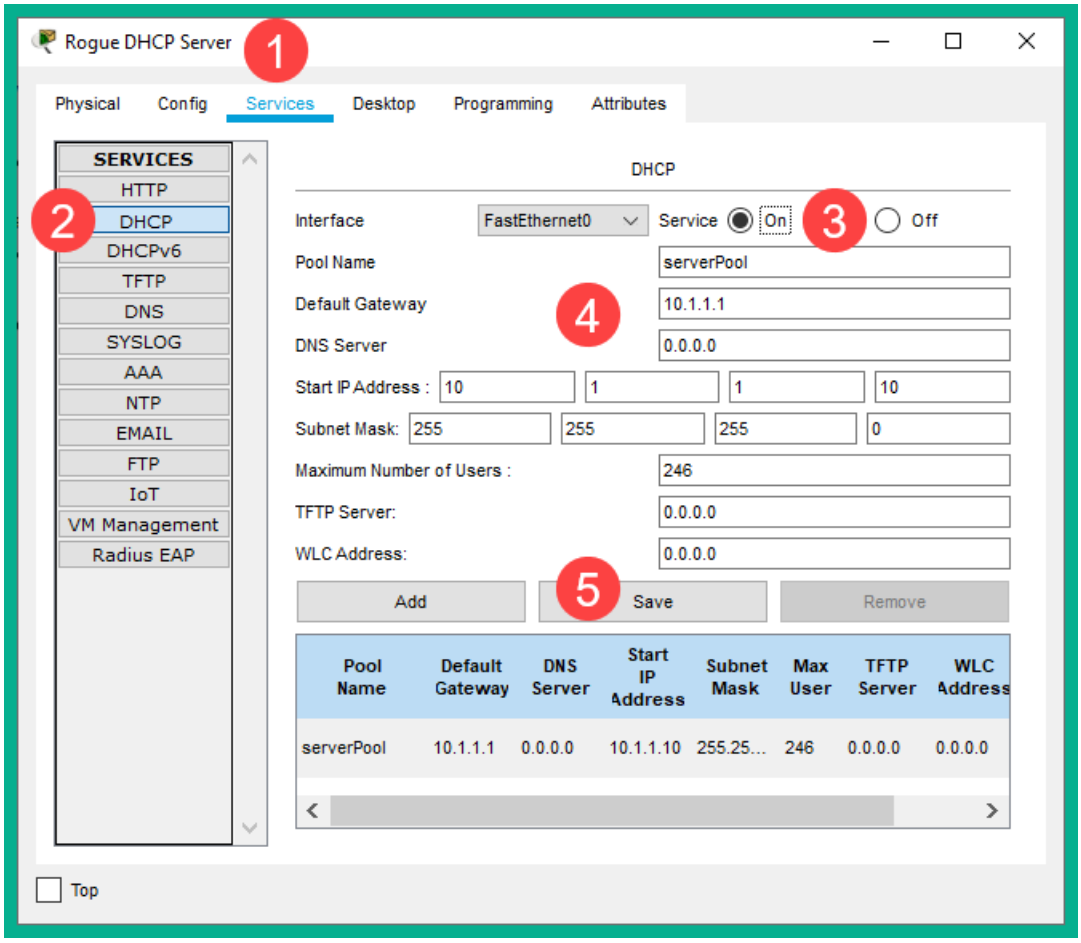
Rogue DHCP Server
1
Physical
Config
Services
Desktop
Programming
Attributes
SERVICES
HTTP
2
DHCP
DHCPv6
TFTP
DNS
SYSLOG
AAA
NTP
EMAIL
FTP
IoT
VM Management
Radius EAP
DHCP
Interface
FastEthernet0
Service
On
3
Off
Pool Name
serverPool
Default Gateway
4
10.1.1.1
DNS Server
0.0.0.0
Start IP Address :
10
1
1
10
Subnet Mask:
255
255
255
0
Maximum Number of Users :
246
TFTP Server:
0.0.0.0
WLC Address:
0.0.0.0
Add
5
Save
Remove
Pool Name
Default Gateway
DNS Server
Start IP Address
Subnet Mask
Max User
TFTP Server
WLC Address
serverPool
10.1.1.1
0.0.0.0
10.1.1.10
255.25...
246
0.0.0.0
0.0.0.0
Top

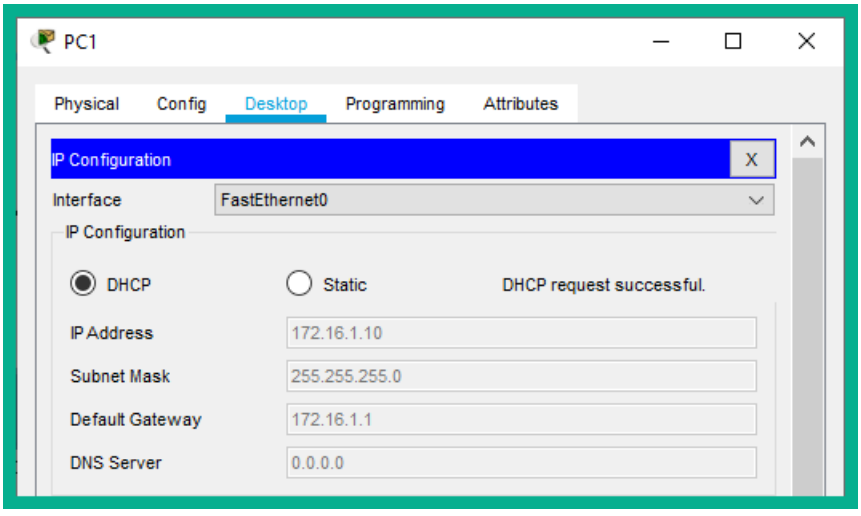
PC1
Physical
Config
Desktop
Programming
Attributes
IP Configuration
X
Interface
FastEthernet0
IP Configuration
DHCP
Static
DHCP request successful.
IP Address
172.16.1.10
Subnet Mask
255.255.255.0
Default Gateway
172.16.1.1
DNS Server
0.0.0.0

```
SW1#show ip dhcp snooping
Switch DHCP snooping is enabled
DHCP snooping is configured on following VLANs:
1
Insertion of option 82 is enabled
Option 82 on untrusted port is not allowed
Verification of hwaddr field is enabled
Interface                    Trusted    Rate limit (pps)
------------------------     -------    ----------------
FastEthernet0/2              no         unlimited
FastEthernet0/1              no         unlimited
GigabitEthernet0/2           yes        unlimited
SW1#
```

```
SW1#show ip dhcp snooping binding
MacAddress          IpAddress        Lease(sec)  Type           VLAN  Interface
------------------  ---------------  ----------  -------------  ----  --------------------
00:01:C9:BA:5B:83   172.16.1.2       86400       dhcp-snooping  1     FastEthernet0/2
00:01:96:6B:B9:5A   172.16.1.10      86400       dhcp-snooping  1     FastEthernet0/1
Total number of bindings: 2
SW1#
```

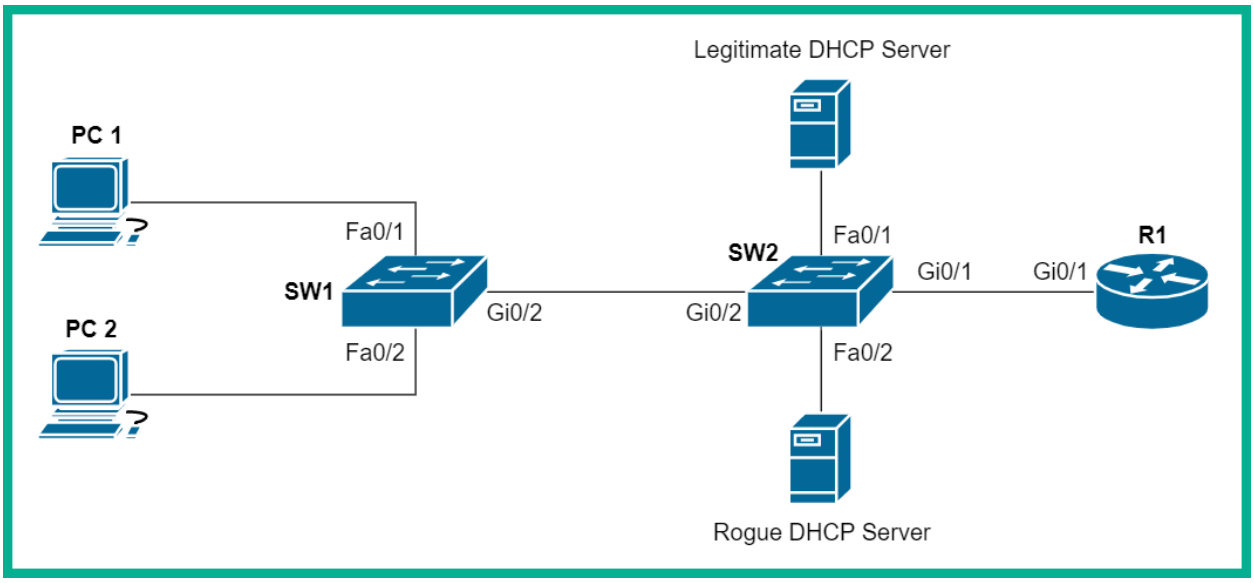

```
Vlan     Configuration    Operation   ACL Match          Static ACL
----     -------------    ---------   ---------          ----------
   1     Enabled          Inactive

Vlan     ACL Logging      DHCP Logging      Probe Logging
----     -----------      ------------      -------------
   1     Deny             Deny              Off

Vlan      Forwarded        Dropped     DHCP Drops      ACL Drops
----      ---------        -------     ----------      ---------
   1              0              0              0              0

Vlan   DHCP Permits    ACL Permits  Probe Permits   Source MAC Failures
----   ------------    -----------  -------------   -------------------
   1              0              0              0                     0

Vlan   Dest MAC Failures   IP Validation Failures   Invalid Protocol Data
----   -----------------   ----------------------   ---------------------
   1                    0                        0                      0
```

```
SW1#show ip arp inspection vlan 1

Source Mac Validation      : Enabled
Destination Mac Validation : Enabled
IP Address Validation      : Enabled

 Vlan     Configuration    Operation   ACL Match          Static ACL
 ----     -------------    ---------   ---------          ----------
    1     Enabled          Inactive

 Vlan     ACL Logging      DHCP Logging      Probe Logging
 ----     -----------      ------------      -------------
    1     Deny             Deny              Off

SW1#
```

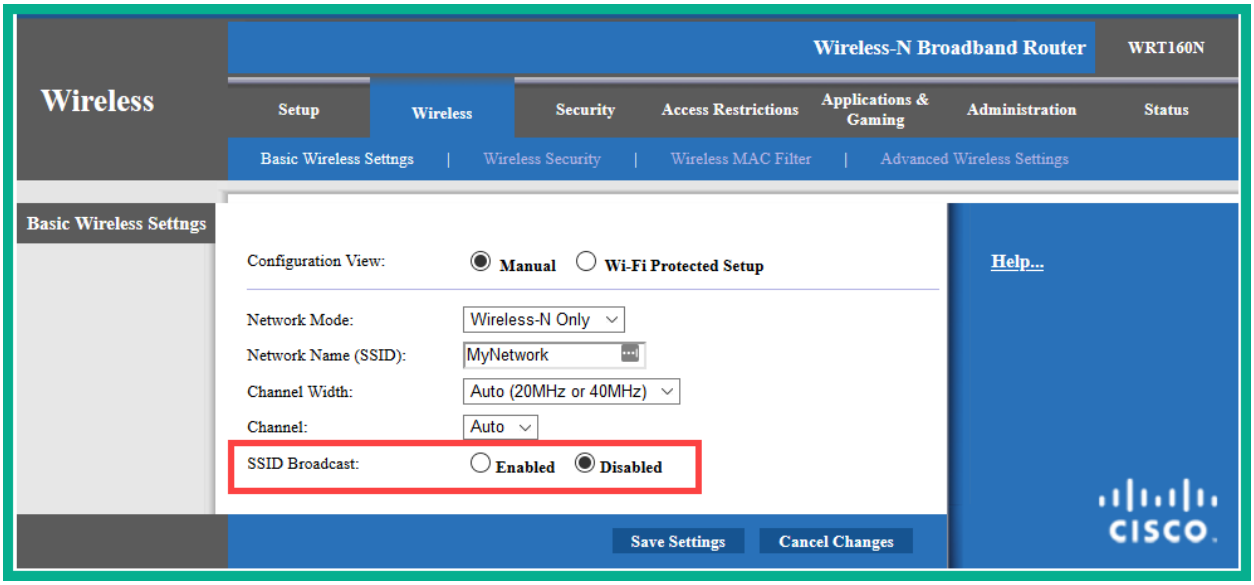
Wireless
Wireless-N Broadband Router
WRT160N
Setup
Wireless
Security
Access Restrictions
Applications & Gaming
Administration
Status
Basic Wireless Settngs | Wireless Security | Wireless MAC Filter | Advanced Wireless Settings
Basic Wireless Settngs
Configuration View: Manual Wi-Fi Protected Setup
Network Mode: Wireless-N Only
Network Name (SSID): MyNetwork
Channel Width: Auto (20MHz or 40MHz)
Channel: Auto
SSID Broadcast: Enabled Disabled
Help...
Save Settings
Cancel Changes
cisco

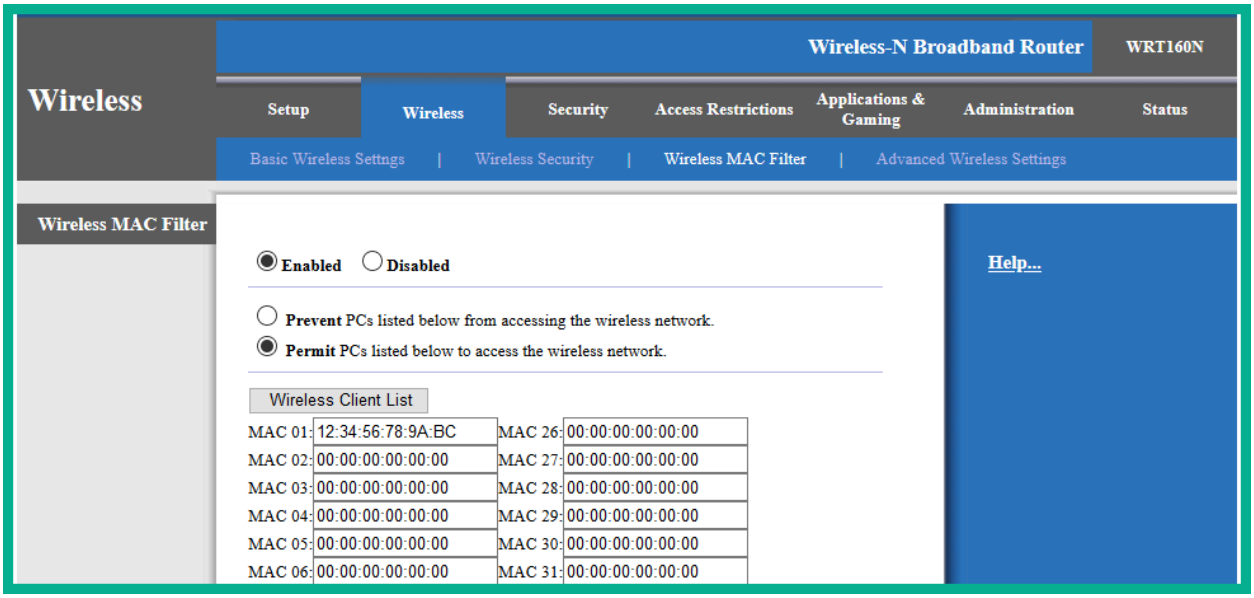
Wireless
Wireless-N Broadband Router
WRT160N
Setup
Wireless
Security
Access Restrictions
Applications & Gaming
Administration
Status
Basic Wireless Settngs | Wireless Security | Wireless MAC Filter | Advanced Wireless Settings
Wireless MAC Filter
Enabled Disabled
Prevent PCs listed below from accessing the wireless network.
Permit PCs listed below to access the wireless network.
Wireless Client List
MAC 01: 12:34:56:78:9A:BC
MAC 02: 00:00:00:00:00:00
MAC 03: 00:00:00:00:00:00
MAC 04: 00:00:00:00:00:00
MAC 05: 00:00:00:00:00:00
MAC 06: 00:00:00:00:00:00
MAC 26: 00:00:00:00:00:00
MAC 27: 00:00:00:00:00:00
MAC 28: 00:00:00:00:00:00
MAC 29: 00:00:00:00:00:00
MAC 30: 00:00:00:00:00:00
MAC 31: 00:00:00:00:00:00
Help...

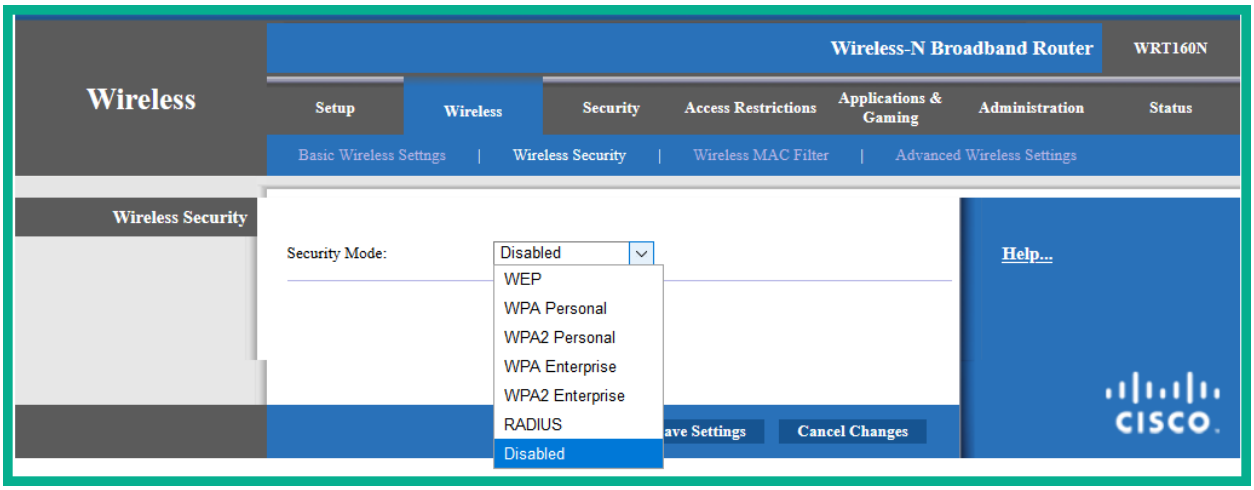
Wireless
Wireless-N Broadband Router
WRT160N
Setup
Wireless
Security
Access Restrictions
Applications & Gaming
Administration
Status
Basic Wireless Settngs | Wireless Security | Wireless MAC Filter | Advanced Wireless Settings
Wireless Security
Security Mode: Disabled
WEP
WPA Personal
WPA2 Personal
WPA Enterprise
WPA2 Enterprise
RADIUS
Disabled
Help...
Cancel Changes
cisco

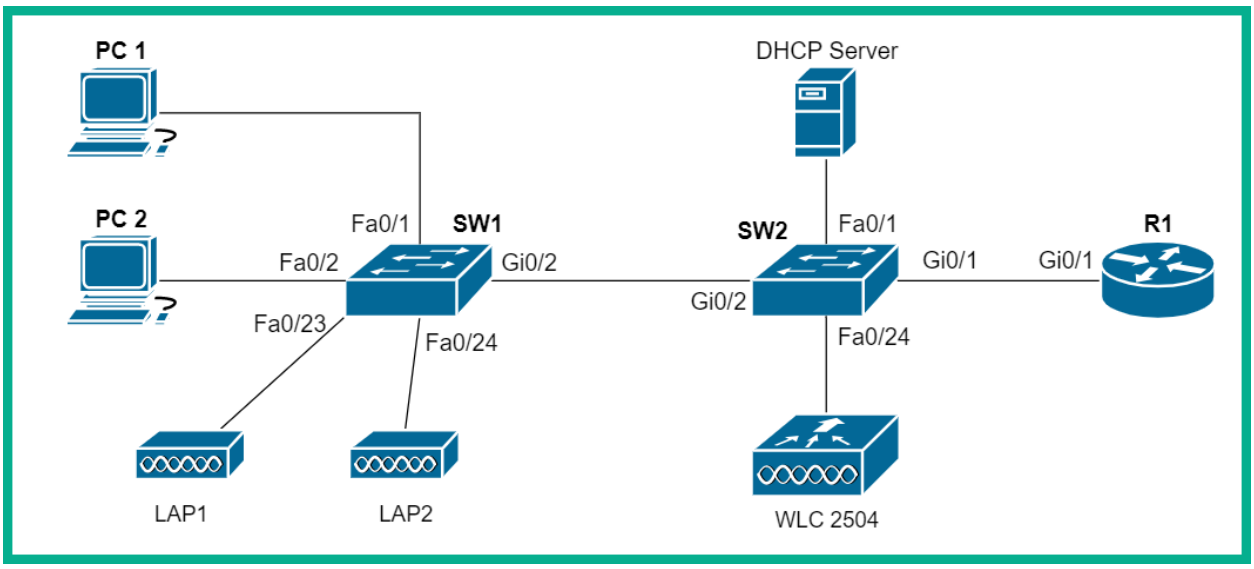
PC 1
DHCP Server
PC 2
Fa0/1
SW1
SW2
Fa0/1
R1
Fa0/2
Gi0/2
Gi0/2
Gi0/1
Gi0/1
Fa0/23
Fa0/24
Fa0/24
LAP1
LAP2
WLC 2504

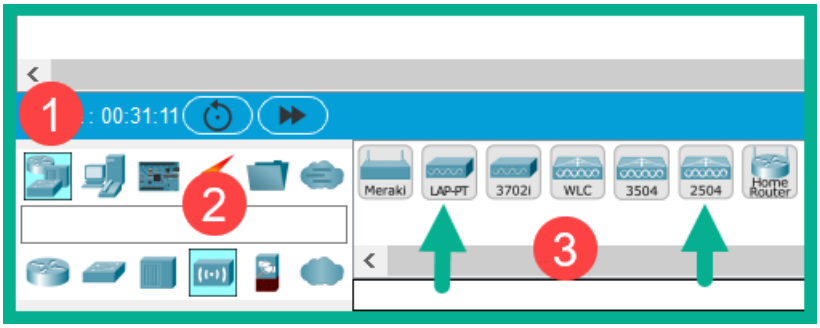
1
: 00:31:11
2
Meraki
LAP-PT
3702i
WLC
3504
2504
Home Router
3

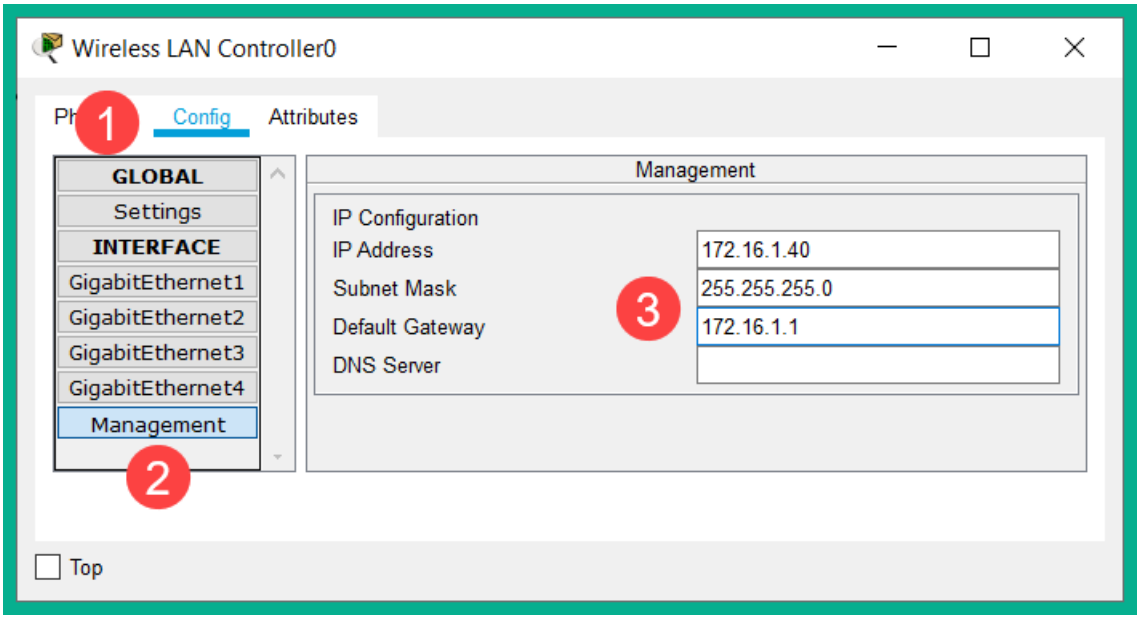
Wireless LAN Controller0
1
Config
Attributes
GLOBAL
Settings
INTERFACE
GigabitEthernet1
GigabitEthernet2
GigabitEthernet3
GigabitEthernet4
Management
2
Management
IP Configuration
IP Address
172.16.1.40
Subnet Mask
255.255.255.0
Default Gateway
172.16.1.1
DNS Server
3
Top

PC1
Physical
Config
Desktop
Programming
Attributes
Web Browser
X
<
>
URL
http://172.16.1.40
Go
Stop
Cisco 2500 Series Wireless LAN Controller
Welcome! Please start by creating an admin account.
admin
Use password as "Cisco123".
Start
Top

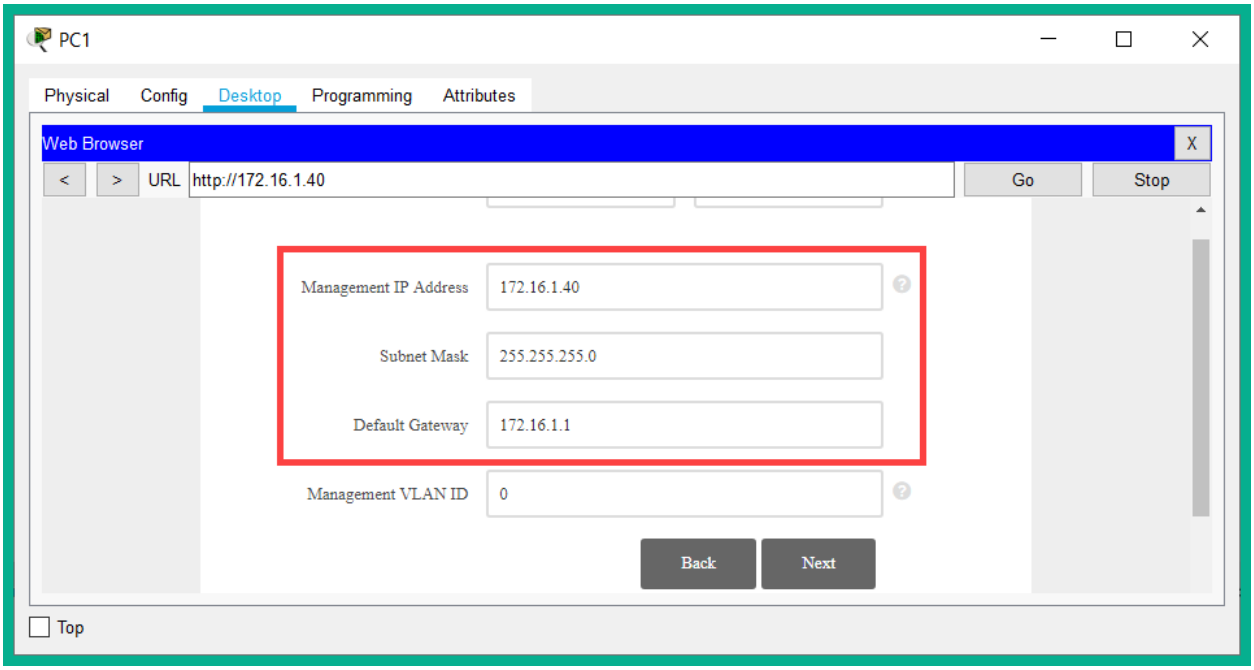
PC1
Physical
Config
Desktop
Programming
Attributes
Web Browser
X
<
>
URL
http://172.16.1.40
Go
Stop
Management IP Address
172.16.1.40
Subnet Mask
255.255.255.0
Default Gateway
172.16.1.1
Management VLAN ID
0
Back
Next
Top

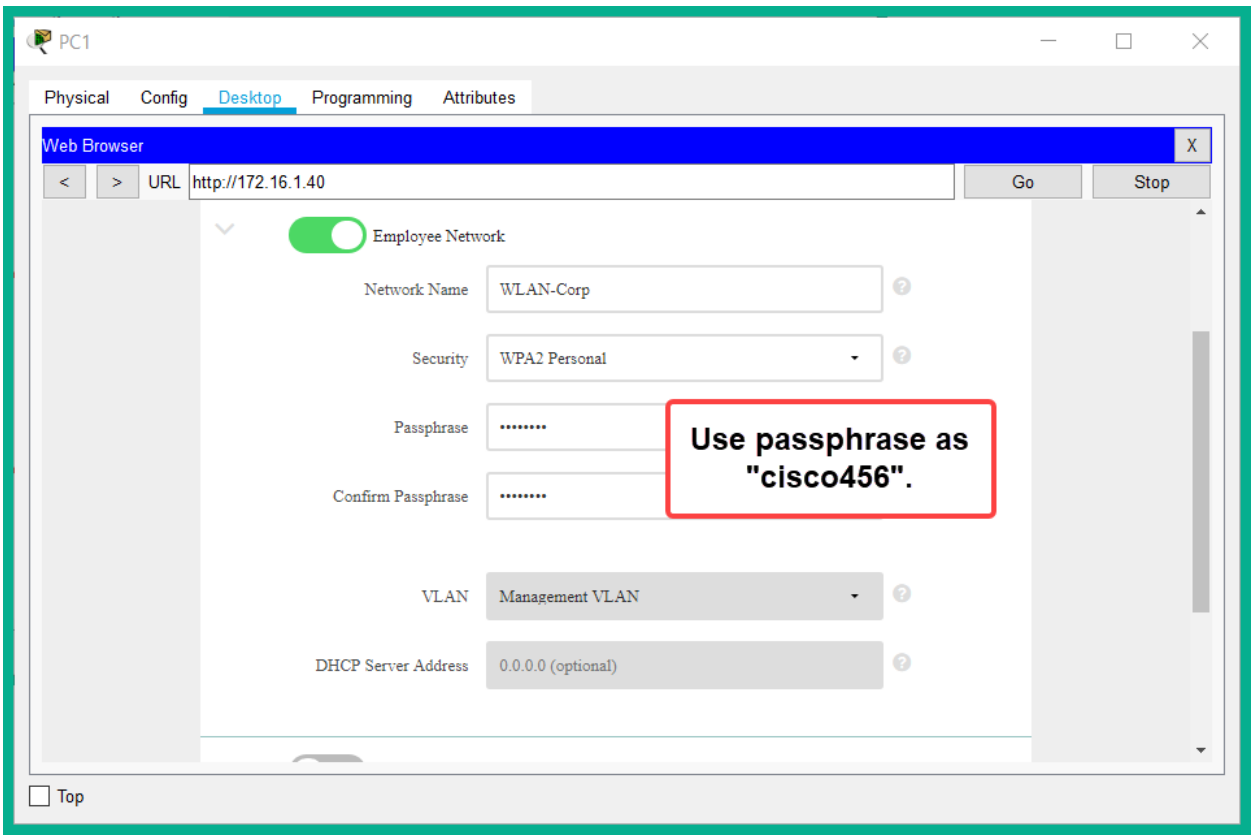
PC1
Physical
Config
Desktop
Programming
Attributes
Web Browser
X
URL
http://172.16.1.40
Go
Stop
Employee Network
Network Name
WLAN-Corp
Security
WPA2 Personal
Passphrase
Confirm Passphrase
Use passphrase as "cisco456".
VLAN
Management VLAN
DHCP Server Address
0.0.0.0 (optional)
Top

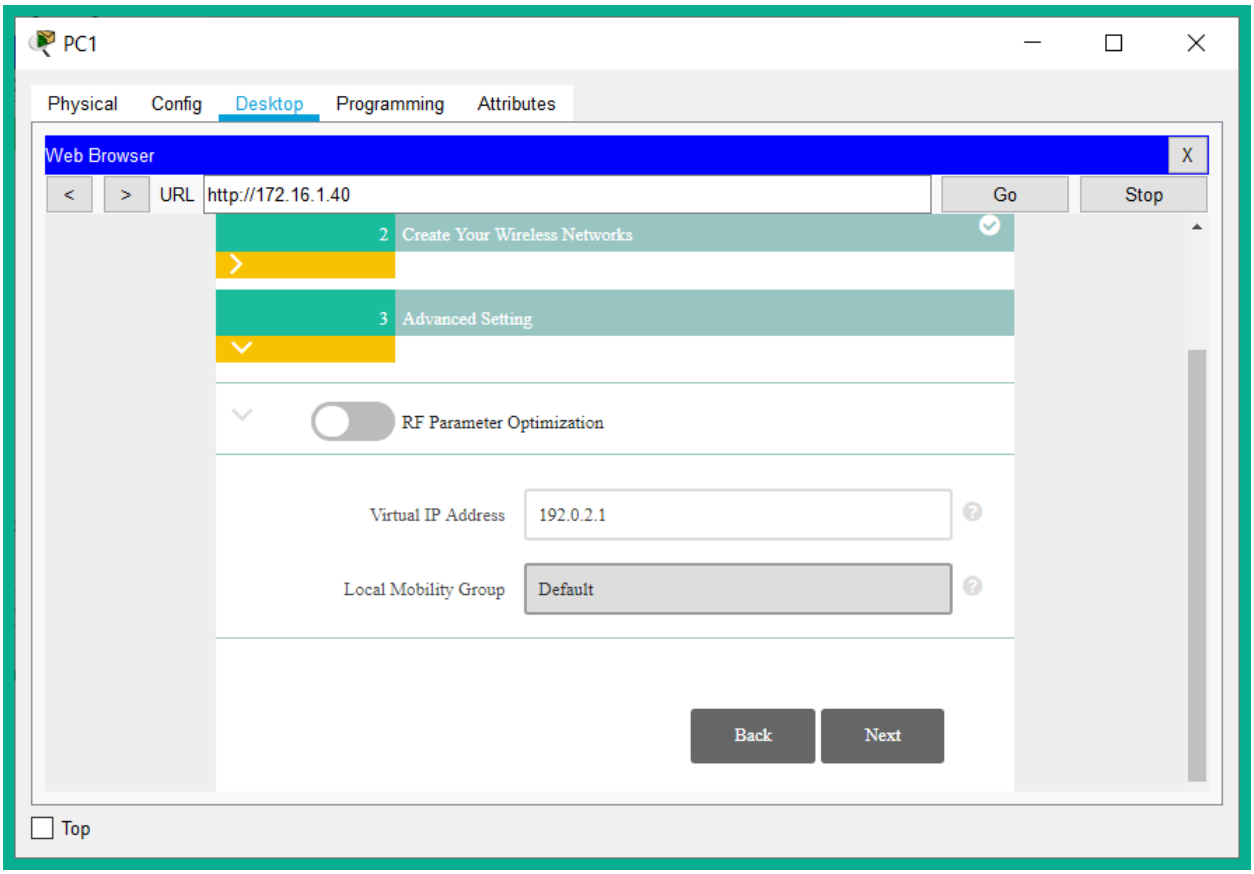
PC1
Physical
Config
Desktop
Programming
Attributes
Web Browser
X
URL
http://172.16.1.40
Go
Stop
2 Create Your Wireless Networks
3 Advanced Setting
RF Parameter Optimization
Virtual IP Address
192.0.2.1
Local Mobility Group
Default
Back
Next
Top

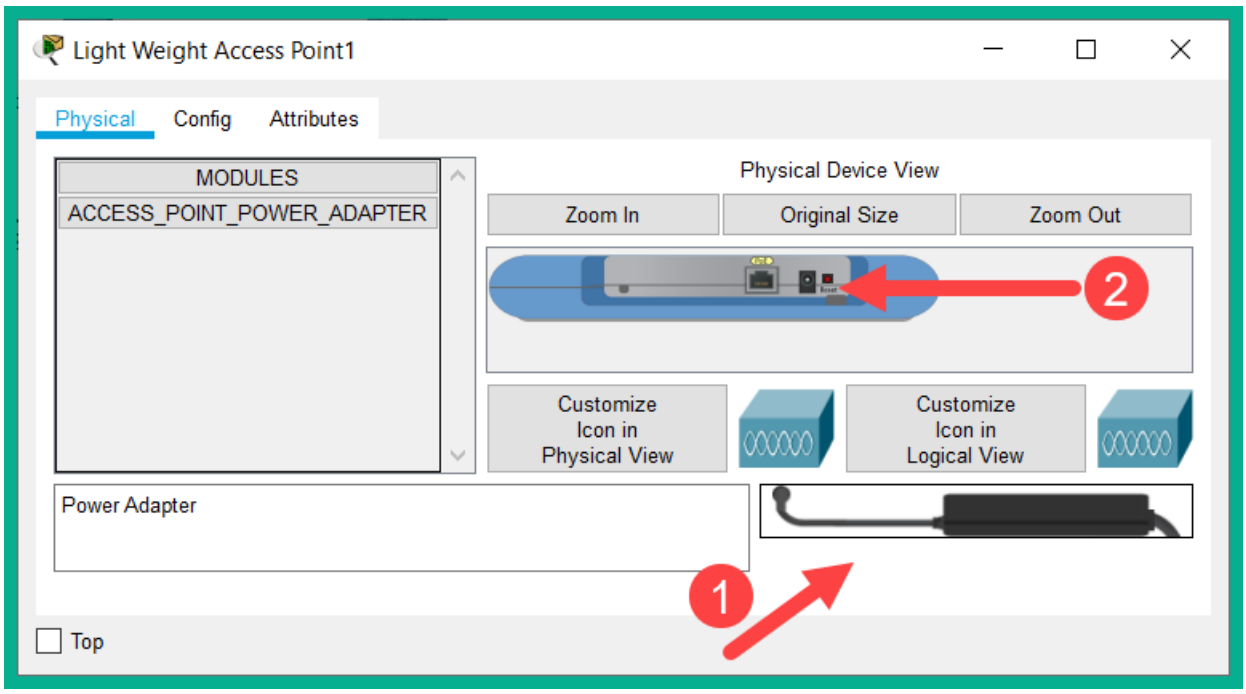
Light Weight Access Point1
Physical
Config
Attributes
MODULES
ACCESS_POINT_POWER_ADAPTER
Physical Device View
Zoom In
Original Size
Zoom Out
2
Customize Icon in Physical View
Customize Icon in Logical View
Power Adapter
1
Top

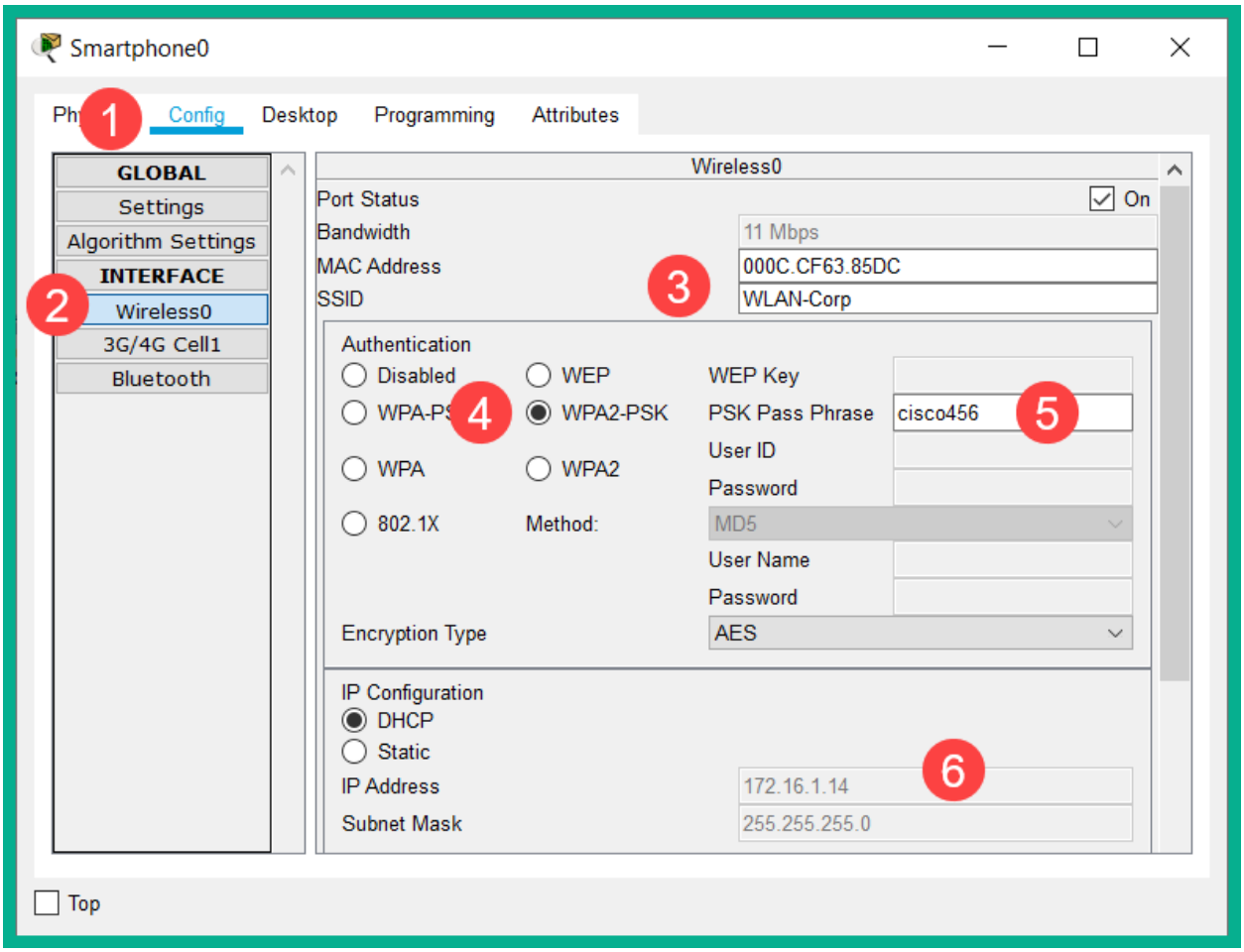
Smartphone0
Ph
1
Config
Desktop
Programming
Attributes
GLOBAL
Settings
Algorithm Settings
INTERFACE
2
Wireless0
3G/4G Cell1
Bluetooth
Wireless0
Port Status
On
Bandwidth
11 Mbps
MAC Address
000C.CF63.85DC
SSID
3
WLAN-Corp
Authentication
Disabled
WEP
WEP Key
WPA-PS
4
WPA2-PSK
PSK Pass Phrase
cisco456
5
User ID
WPA
WPA2
Password
802.1X
Method:
MD5
User Name
Password
Encryption Type
AES
IP Configuration
DHCP
Static
IP Address
172.16.1.14
6
Subnet Mask
255.255.255.0
Top

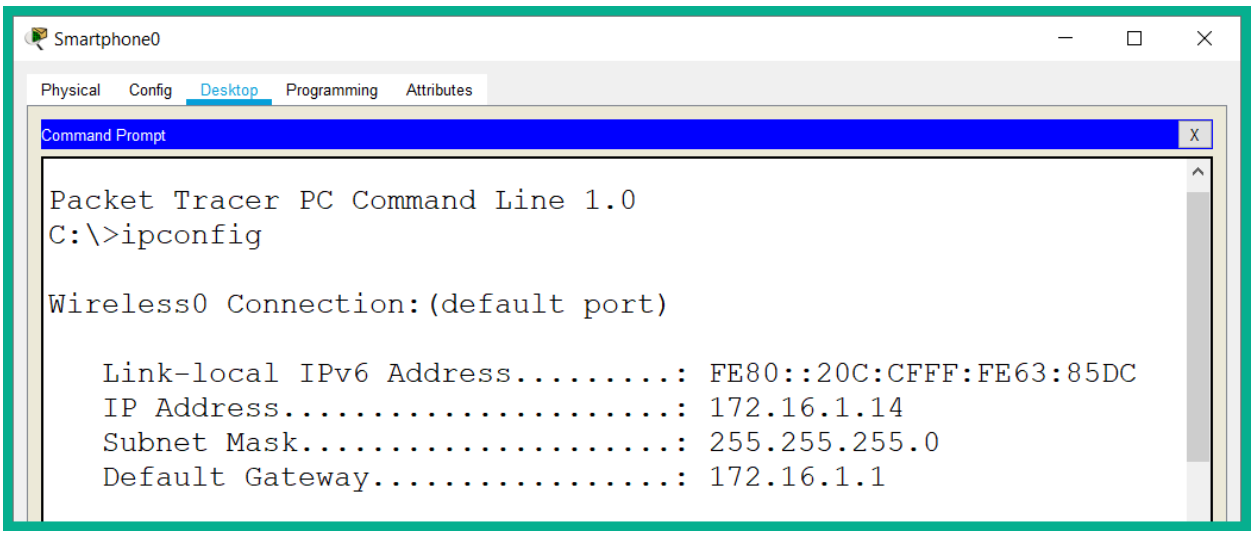
Smartphone0
Physical
Config
Desktop
Programming
Attributes
Command Prompt
X
Packet Tracer PC Command Line 1.0
C:\>ipconfig
Wireless0 Connection:(default port)
Link-local IPv6 Address.....: FE80::20C:CFFF:FE63:85DC
IP Address.....: 172.16.1.14
Subnet Mask.....: 255.255.255.0
Default Gateway.....: 172.16.1.1

Chapter 15: Network Automation and Programmability Techniques

HTMLPage1.html

```
<!DOCTYPE html>

<html lang="en" xmlns="http://www.w3.org/1999/xhtml">
<head>
    <meta charset="utf-8" />
    <title>TEST Web Page</title>
</head>
<body>
    <h1> This is the Heading for the webpage</h1>
    <p>This page is simply used to demonstrate HTML coding </p>
</body>
</html>
```

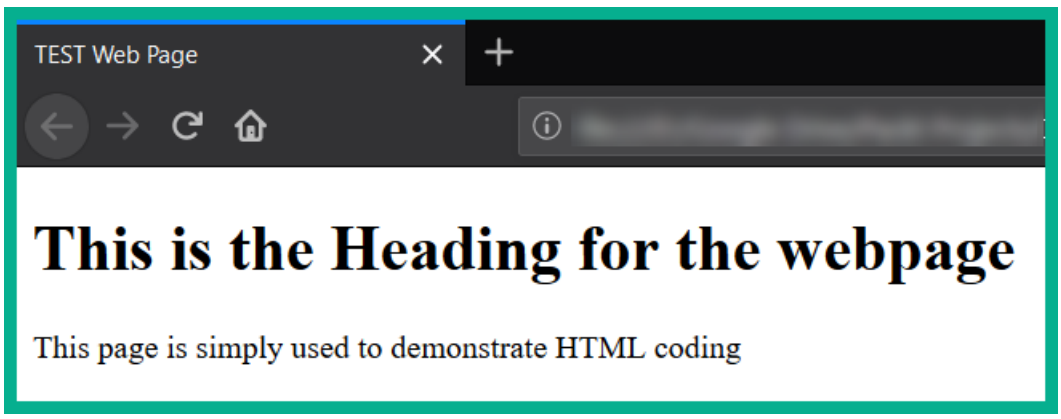


```
<?xml version="1.0" encoding="UTF-8" ?>
<note>
    <to>Alice</to>
    <from>Bob</from>
    <heading>CCNA Study Group</heading>
    <body>We have received a new assignment.</body>
</note>
```

```
{
    "ietf-interfaces:interface": {
        "name": "GigabitEthernet0/1",
        "description": "Connected to Wide Area Network (WAN)",
        "enabled": true,
        "ietf-ip:ipv4": {
            "address": [
                {
                    "ip": "172.16.1.1",
                    "netmask": "255.255.255.0"
                }
            ]
        }
    }
}
```

```
{
 "ITCerts":[
   {
     "Networking":"Cisco Certified Network Associate"
    },
   {
     "Cybersecurity":"Cisco Certified CyberOps Associate"
    },
   {
     "NetworkDeveloper":"Cisco Certified DevNet Associate"
    }
 ]
}
```


```
{
 "ITCerts":[
   {
     "Networking":"Cisco Certified Network Associate"
    },
   {
     "Cybersecurity":"Cisco Certified CyberOps Associate"
    },
   {
     "NetworkDeveloper":"Cisco Certified DevNet Associate"
    }
 ]
}
```

```yaml
ITCerts:
  - Networking: Cisco Certified Network Associate
  - Cybersecurity: Cisco Certified CyberOps Associate
  - NetworkDeveloper: Cisco Certified DevNet Associate
```

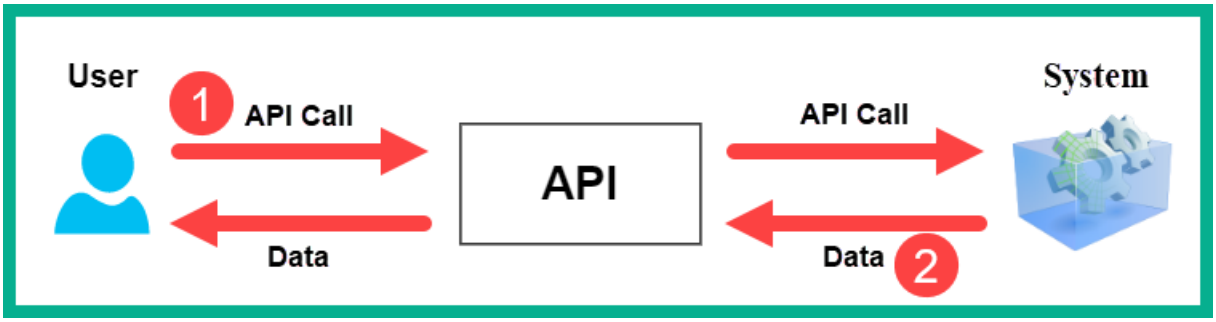

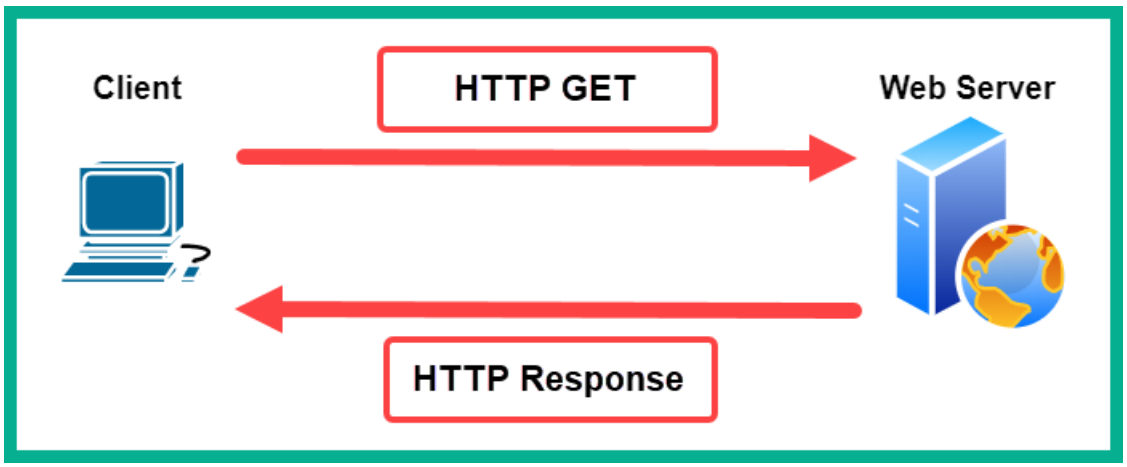

HTTP Method	RESTful Operation	Description
POST	Create	Allows a client to create data on the server.
GET	Request	Allows a client to request data from a server.
PUT/PATCH	Update	Allows a client to update data on a server.
DELETE	Delete	Allows a client to delete data from a server.

```
{
    "response": [
        {
            "pid": "ASR1001-X",
            "deviceId": "1cfd383a-7265-47fb-96b3-f069191a0ed5",
            "portName": "TenGigabitEthernet0/0/0",
            "ifIndex": "1",
            "mediaType": "unknown",
            "speed": "10000000",
            "status": "up",
            "adminStatus": "UP",
            "macAddress": "00:c8:8b:80:bb:00",
            "duplex": "FullDuplex",
            "interfaceType": "Physical",
            "ipv4Address": "10.10.22.253",
            "ipv4Mask": "255.255.255.252",
            "isisSupport": "false",
            "mappedPhysicalInterfaceId": null,
            "mappedPhysicalInterfaceName": null,
            "nativeVlanId": null,
            "ospfSupport": "false",
            "portMode": "routed",
            "portType": "Ethernet Port",
            "serialNo": "FXS1932Q1SE",
            "voiceVlan": null,
            "lastUpdated": "2020-06-30 13:37:16.891",
            "series": "Cisco ASR 1000 Series Aggregation Services Routers",
            "description": "Uplink to WAN Distribution - main-switch ten 1/1/1",
            "className": "EthrntPrtclEndpntExtndd",
            "vlanId": "0",
            "instanceTenantId": "5dc444d31485c5004c0fb20b",
            "instanceUuid": "15fe6fc3-f6e7-45d8-94f9-e89a0bdba9b1",
            "id": "15fe6fc3-f6e7-45d8-94f9-e89a0bdba9b1"
        }
    ],
    "version": "1.0"
}
```

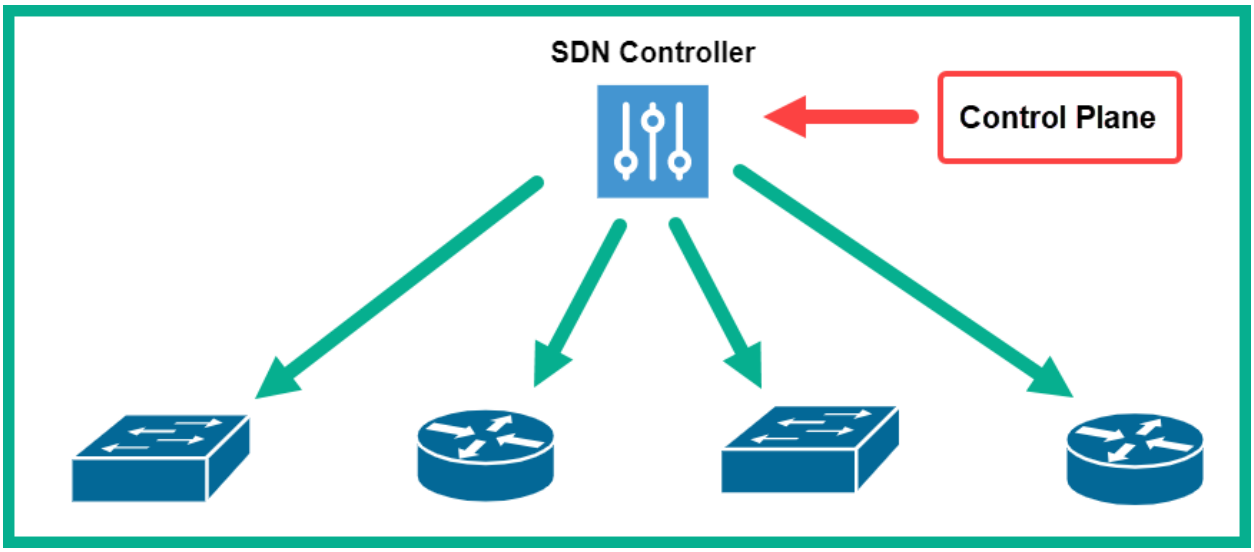
SDN Controller
Control Plane

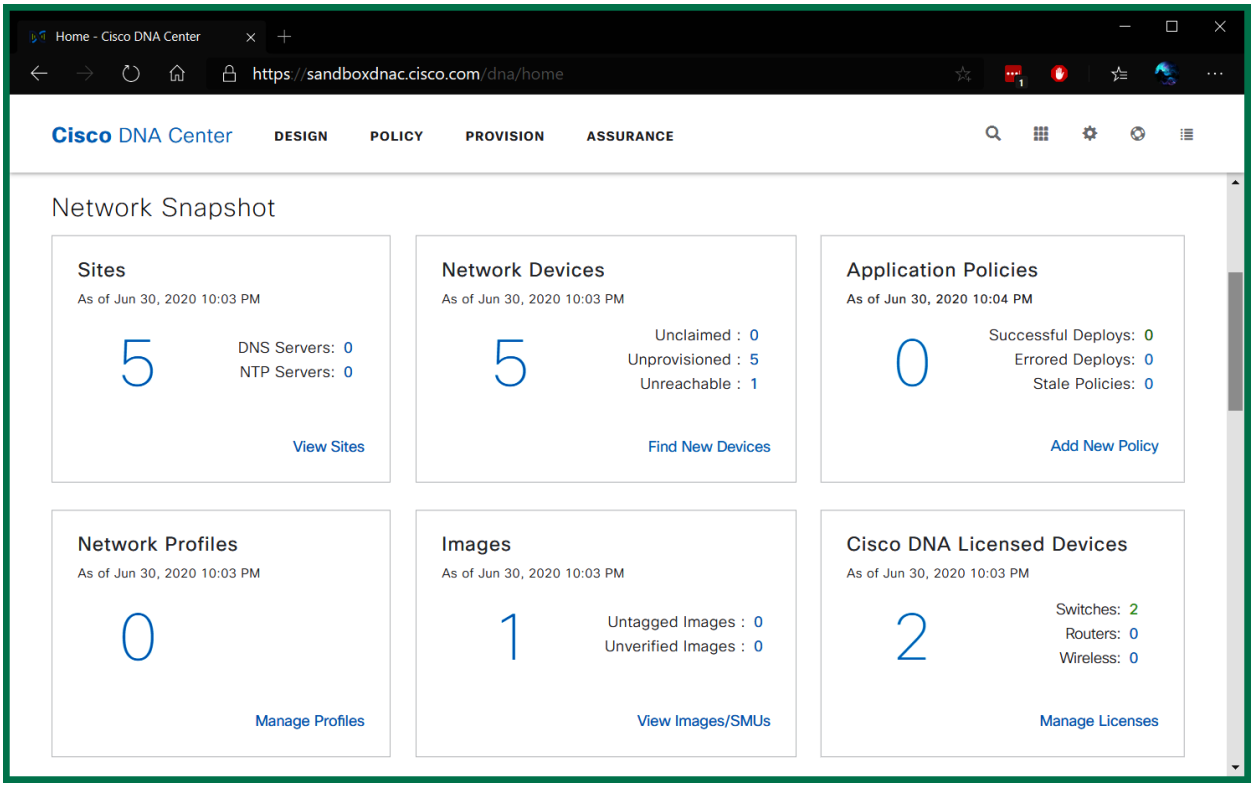
Home - Cisco DNA Center
https://sandboxdnac.cisco.com/dna/home
Cisco DNA Center
DESIGN
POLICY
PROVISION
ASSURANCE
Network Snapshot
Sites
As of Jun 30, 2020 10:03 PM
5
DNS Servers: 0
NTP Servers: 0
View Sites
Network Devices
As of Jun 30, 2020 10:03 PM
5
Unclaimed : 0
Unprovisioned : 5
Unreachable : 1
Find New Devices
Application Policies
As of Jun 30, 2020 10:04 PM
0
Successful Deploys: 0
Errored Deploys: 0
Stale Policies: 0
Add New Policy
Network Profiles
As of Jun 30, 2020 10:03 PM
0
Manage Profiles
Images
As of Jun 30, 2020 10:03 PM
1
Untagged Images : 0
Unverified Images : 0
View Images/SMUs
Cisco DNA Licensed Devices
As of Jun 30, 2020 10:03 PM
2
Switches: 2
Routers: 0
Wireless: 0
Manage Licenses

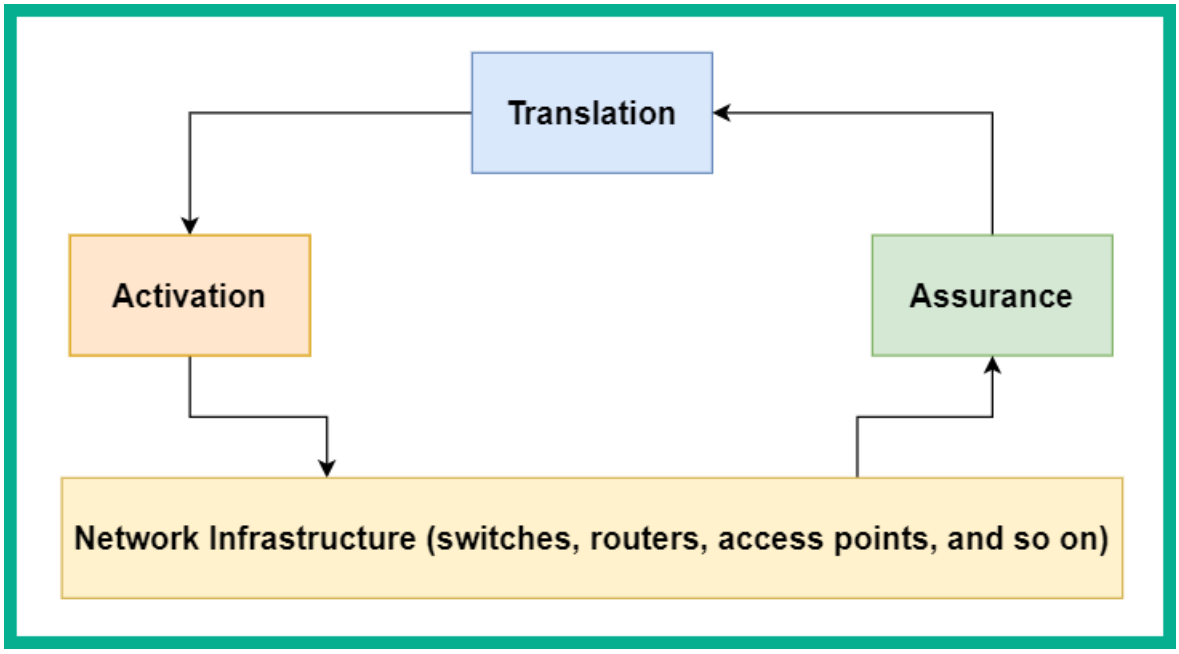
Translation
Activation
Assurance
Network Infrastructure (switches, routers, access points, and so on)

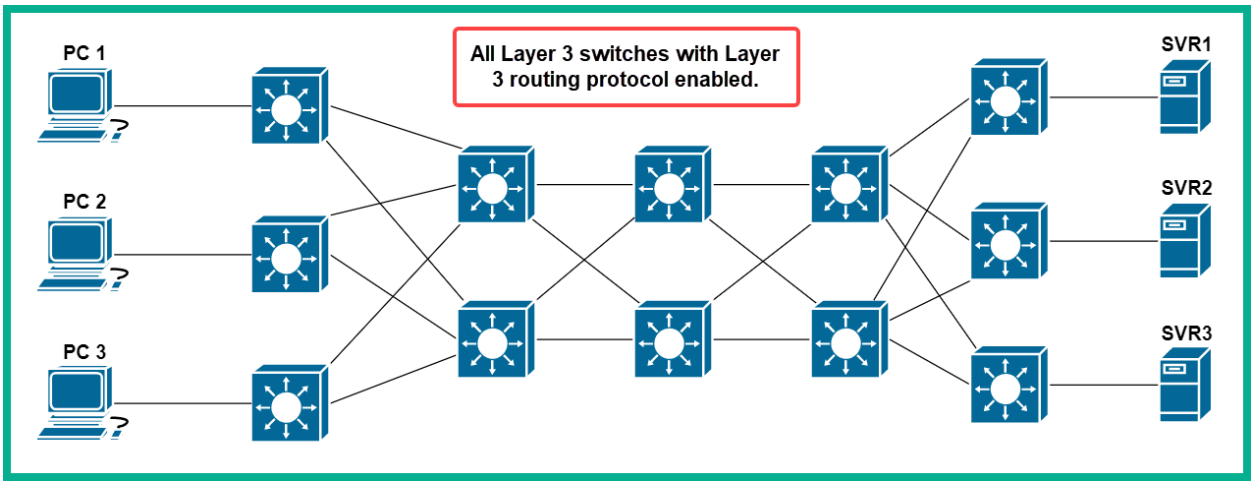
All Layer 3 switches with Layer 3 routing protocol enabled.
PC 1
PC 2
PC 3
SVR1
SVR2
SVR3

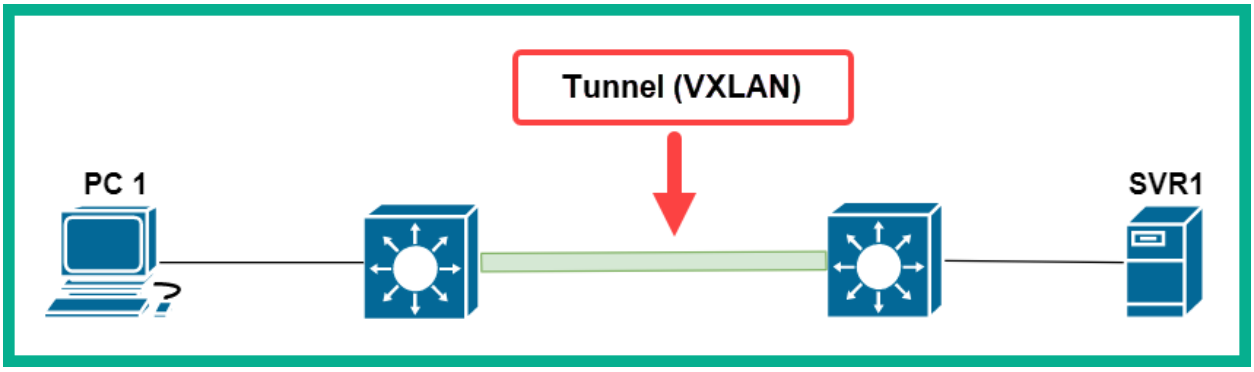
Tunnel (VXLAN)
PC 1
SVR1

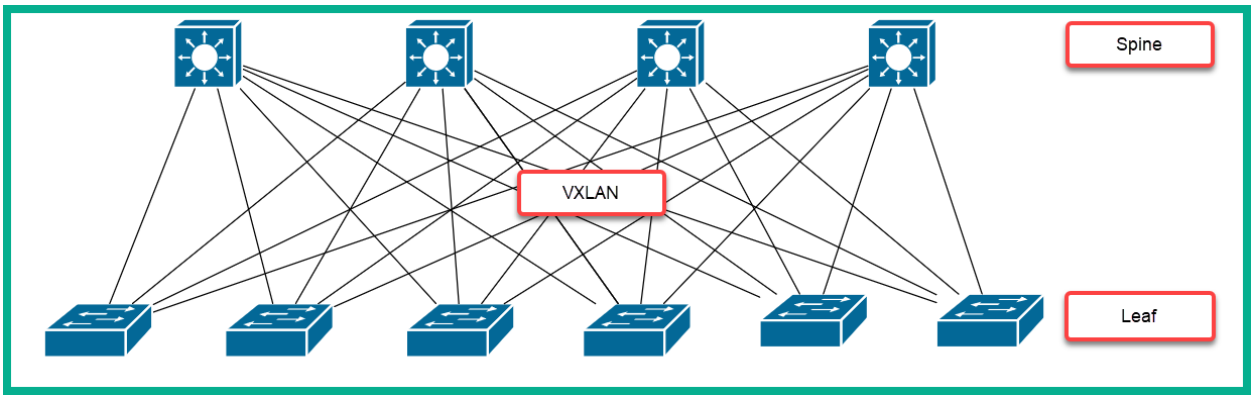
Spine
VXLAN
Leaf